User Manual
GFK-2958L
May 2021

PACSystems™ RSTi-EP

USER MANUAL

EMERSON

Contents

Section 1: Introduction 1

1.1 Revisions in this Manual 2
1.2 PACSystems Documentation 3
1.2.1 PACSystems Manuals 3
1.2.2 RX3i Manuals 3
1.3 System Overview 4
1.3.1 Dimensions of the RSTi-EP Components 5
1.3.2 Double-click Installation 5
1.4 General Description of the Fieldbus Network Adapters 6
1.5 General Technical Data for the Fieldbus Network Adapter 7
1.6 General Description of I/O Modules 8
1.6.1 I/O module (Example EP-1214) 8
1.6.2 Standard Connector 10
1.6.3 HD Connector EP-8360 11
1.6.4 Cable Protection 13
1.7 General Technical Data for I/O Modules 14
1.8 Mechanical Fixing Elements 16
1.9 Type Plate 16
1.10 Markers 17
1.10.1 Swivel Marker 17

Section 2: Safety 18

2.1 General Safety Notice 18
2.1.1 Electrostatic Discharge 18
2.1.2 Open Equipment 19
2.1.3 Fusing 19
2.1.4 Earthing (functional earth FE) 19
2.1.5 Shielding 20
2.1.6 Overcurrent 20
2.2 Intended Use 20
2.3 Use in a Potentially Explosive Atmosphere 20
2.3.1 ATEX Zone 2 21
2.3.2 ATEX & IECEx Marking 22
2.4 Legal Notice 22
2.5 Use of RSTi-EP Stations 2,000m above Sea Level 22
2.5.1 Example: 22

Section 3: Configuration 23

3.1 Order and Arrangement of Modules 23
3.1.1 Arrangement of Safe Power-Feed Modules 24
3.1.2 Power Supply Concept 24
3.2 Clearances 25
3.2.1 Calculation of Space Requirements 27

3.3 Use in a Potentially Explosive Atmosphere 27
3.3.1 ATEX & IECEx Marking 28
3.4 Spring-Style System Cabling 28
3.5 Current Demand and Power Supply 28
3.5.1 Power Supply Derating 29
3.6 Example Calculation for the Power Supply 30
Calculation of the Current Demand for the Input Current 30
Calculation of the Current Demand for the Output Current 31
3.7 Example Calculation for the Current Demand (all Current Values in Amps) 32
3.7.1 Calculation of Power Loss 33
3.7.2 Calculation of Power Loss for Use in a Potentially Explosive Atmosphere 33
3.8 Feedback Energy in DO Modules 34
3.8.1 Calculation of Feedback Energy 34
3.9 Parameter Overview 35
3.9.1 Modifiable Parameters for Network Adaptors 35
3.10 Data Width of I/O Module, Dependent on the Network Adapter Used 50
3.10.1 EPXPBS001 50
3.10.2 EPXPNS001/EPXPNS101 52
3.10.3 EPXETC001 54
3.10.4 EPXEIP001 55

Section 4: Detailed Descriptions of the Fieldbus Network Adapters 58

4.1 Profibus DP Network Adapter EPXPBS001 58
4.1.1 LEDs 59
4.1.2 Addressing 60
4.1.3 Connection Diagrams 62
4.1.4 Specifications: EPXPBS001 63
4.1.5 Modifiable Parameters EPXPBS001 64
4.1.6 Supported Modules and Power Supplies 65
4.2 PROFINET IRT/RT Network Adapter EPXPNS001/EPXPNS101 67
4.2.1 LEDs 68
4.2.2 Connection Diagrams 70
4.2.3 Specification: EPXPNS001/EPXPNS101 71
4.2.4 Modifiable Parameters: EPXPNS001/EPXPNS101 73
4.2.5 Network Adaptor Input Status Data 74
4.2.6 Hot Standby CPU Redundancy I/O Parameters (EPXPNS101) 75
4.2.7 RSTi-EP PROFINET Channel Diagnostic Alarm Reporting 76
4.2.8 Supported Modules and Power Supplies 86
4.3 EtherCAT® Network Adapter EPXETC001 87
4.3.1 LEDs 88
4.3.2 Connection Diagrams 90
4.3.3 Specifications: EPXETC001 91
4.3.4 Modifiable Parameters for EPXETC001 92
4.3.5 RSTi-EP Status Messages 92
4.3.6 Module Status Messages 93
4.3.7 Module Diagnosis 93

4.3.8 Supported Modules and Power Supplies 94
4.4 Modbus®TCP Network Adapter EPXMBE001/EPXMBE101 96
4.4.1 LEDs 97
4.4.2 Connection Diagrams 98
4.4.3 Specifications: EPXMBE001/EPXMBE101 99
4.4.4 Configuration of the IP Address 100
4.4.5 Modifiable Parameters for EPXMBE001/EPXMBE101 100
4.4.6 Supported Modules and Power Supplies 104
4.4.7 Packed Process Data 106
4.4.8 0x1000 – 0x1006 Network Adapter Identifier 108
4.4.9 0x1000 – 0x1006 Network Adapter Status 108
4.4.10 0x1010 Process Image Length in Bits for the Output Modules 108
4.4.11 0x1010 Process Image Length in Bits for the Input Modules 108
4.4.12 0x1017 Register – Mapping Revision 108
4.4.13 0x1018 – 0x101B Collective Diagnostics Message for I/O Modules 109
4.4.14 0x101C – 0x101F Collective Process Message for I/O Modules 109
4.4.15 0x1028 – 0x102F Module Status 109
4.4.16 0x1030 MODBUS DATA EXCHANGE Watchdog, Current Time 109
4.4.17 0x1120 MODBUS DATA EXCHANGE watchdog, predefined time 110
4.4.18 0x1121 MODBUS DATA EXCHANGE Watchdog Reset Register 110
4.4.19 0x1122 Lock Force Mode on Web Server 110
4.4.20 0x1031 MODBUS CONNECTION Mode Register 110
4.4.21 0x1131 MODBUS CONNECTION Timeout in Sec 110
4.4.22 0x1132 Check Reference List prior to Data Exchange 111
4.4.23 0x1133 Process Alarm 111
4.4.24 0x1134 Diagnostic Alarm 111
4.4.25 0x1135 Field Bus or Reference List Error Behavior 111
4.4.26 0x1136 Module Removal Behavior 111
4.4.27 0x1137 Data Format 111
4.4.28 0x113C – 0x113F Save Module Parameters 112
4.4.29 0x27FE Number of Entries in the Current Module List 113
4.4.30 0x27FF Number of Entries in the Reference Module List 113
4.4.31 0x2800 – 0x287F Reference Module List 113
4.4.32 0x2A00 – 0x2A7F Current Module List 113
4.4.33 0x2B00 – 0x2B7F Module Offsets of Process Data 113
4.4.34 0x8000 – 0x87FF Process Data Inputs 113
4.4.35 0x9000 – 0x97FF Process Data Outputs 114
4.4.36 0xA000 – 0xA7FF Diagnostics 114
4.4.37 0xB000 – 0xB7FF Process Alarms 114
4.4.38 0xC000 –0xFFFF Parameters 114
4.5 EtherNet/IP™ Network Adapter EPXEIP001 115
4.5.1 LEDs 116
4.5.2 Connection Diagrams 118
4.5.3 Specifications: EPXEIP001 119
4.5.4 Modifiable Parameters for EPXEIP001 120
4.5.5 Data types EPXEIP001 123
4.5.6 Process data 125
4.5.7 Status word EPXEIP001(Packed process data input) 127

4.5.8 Object descriptions EPXEIP001: CIP Common Classes 128
4.5.9 Object descriptions EPXEIP001: Vendor Specific Classes 134
4.5.10 Supported Modules and Power Supplies 137

Section 5: Detailed Description of I/O Modules 139

5.1 Digital Input Module EP-1214 139
5.1.1 LED Indicators EP-1214 140
5.1.2 Specifications EP-1214 141
5.1.3 Modifiable Parameters for EP-1214 141
5.1.4 Diagnostic Data EP-1214 142
5.1.5 Process Data Inputs EP-1214 143
5.2 Digital Input Module EP-1218 143
5.2.1 LED Indicators EP-1218 144
5.2.2 Specifications EP-1218 145
5.2.3 Modifiable Parameters for EP-1218 145
5.2.4 Diagnostic Data EP-1218 145
5.2.5 Process Data Inputs EP-1218 147
5.3 Digital Input Module EP-1318 147
5.3.1 LED Indicators EP-1318 148
5.3.2 Specifications EP-1318 149
5.3.3 Modifiable Parameters for EP-1318 149
5.3.4 Diagnostic Data EP-1318 150
5.3.5 Process Data Inputs EP-1318 151
5.4 Digital Input Module EP-1804 151
5.4.1 LED Indicators EP-1804 152
5.4.2 Specifications EP-1804 153
5.4.3 Diagnostic Data EP-1804 153
5.4.4 Process Data Inputs EP-1804 155
5.5 Digital Input Module EP-125F 155
5.5.1 LED Indicators EP-125F 156
5.5.2 Specifications EP-125F 157
5.5.3 Diagnostic Data EP-125F 157
5.5.4 Process Data Inputs EP-125F 158
5.6 Digital Input Module EP-12F4 158
5.6.1 LED Indicators EP-12F4 160
5.6.2 Specifications EP-12F4 161
5.6.3 Modifiable Parameters for EP-12F4 162
5.6.4 Diagnostic Data EP-12F4 162
5.6.5 Process† Data Inputs EP-12F4 163
5.6.6 Time Stamp Function 163
5.6.7 Structure of an ETS Entry 164
5.7 Digital Input Module EP-153F 167
5.7.1 LED Indicators EP-153F 168
5.7.2 Specifications EP-153F 169
5.7.3 Diagnostic Data EP-153F 169
5.7.4 Process Data Inputs EP-153F 170
5.8 Digital Output Module EP-2214 170

5.8.1 LED Indicators EP-2214 ... 172
5.8.2 Specifications EP-2214 ... 173
5.8.3 Modifiable Parameters for EP-2214 ... 174
5.8.4 Diagnostic Data EP-2214 ... 174
5.8.5 Process Data Outputs EP-2214 ... 175
5.9 Digital Output Module EP-2614 ... 175
5.9.1 LED Indicators EP-2614 ... 176
5.9.2 Specifications EP-2614 ... 177
5.9.3 Modifiable Parameters for EP-2614 ... 178
5.9.4 Diagnostic Data EP-2614 ... 178
5.9.5 Process Data Outputs EP-2614 ... 179
5.10 Digital Output Module EP-2634 ... 179
5.10.1 LED Indicators EP-2634 ... 180
5.10.2 Specifications EP-2634 ... 181
5.10.3 Modifiable Parameters for EP-2634 ... 182
5.10.4 Diagnostic Data EP-2634 ... 182
5.10.5 Process Data Outputs EP-2634 ... 182
5.11 Digital Output Module EP-2218 ... 183
5.11.1 LED Indicators EP-2218 ... 183
5.11.2 Specifications EP-2218 ... 185
5.11.3 Modifiable Parameters for EP-2218 ... 185
5.11.4 Diagnostic Data EP-2218 ... 185
5.11.5 Process Data Outputs EP-2218 ... 187
5.12 Digital Output Module EP-225F ... 187
5.12.1 LED Indicators EP-225F ... 188
5.12.2 Specifications: EP-225F ... 189
5.12.3 Diagnostic Data EP-225F ... 190
5.12.4 Process† Data Outputs EP-225F ... 191
5.13 Digital Output Module EP-2814 ... 192
5.13.1 LED Indicators EP-2814 ... 193
5.13.2 Specifications EP-2814 ... 194
5.13.3 Modifiable Parameters for EP-2814 ... 194
5.13.4 Diagnostic Data EP-2814 ... 194
5.13.5 Process Data Outputs EP-2814 ... 195
5.14 Digital Output Module EP-2714 ... 195
5.14.1 LED Indicators EP-2714 ... 197
5.14.2 Specifications EP-2714 ... 198
5.14.3 Modifiable Parameters for EP-2714 ... 199
5.14.4 Diagnostic Data EP-2714 ... 200
5.14.5 Process Data Outputs EP-2714 ... 201
5.15 Digital Output Module EP-291F ... 201
5.15.1 LED Indicators EP-291F ... 202
5.15.2 Specifications: EP-291F ... 203
5.15.3 Diagnostic Data EP-291F ... 204
5.15.4 Process† Data Outputs EP-291F ... 205
5.16 Digital Output Module EP-5111 ... 206
5.16.1 LED Indicators EP-5111 ... 207
5.16.2 Specifications EP-5111 ... 208

5.16.3 Modifiable Parameters for EP-5111 209
5.16.4 Diagnostic Data EP-5111 211
5.16.5 Process Data† Inputs EP-5111 212
5.16.6 Process Data† Outputs EP-5111 212
5.16.7 Process Alarm Data EP-5111 214
5.16.8 Setting Up the Counter 214
5.16.9 Counter Functions 215
5.16.10 Additional Counter Features 222
5.17 Digital Counter Module EP-5112 228
5.17.1 LED indicators EP-5112 229
5.17.2 Specifications EP-5112 230
5.17.3 Modifiable Parameters for EP-5112 231
5.17.4 Diagnostic Data EP-5112 232
5.17.5 Process Data† Inputs EP-5112 233
5.17.6 Process Data† Outputs EP-5112 234
5.17.7 Process Alarms for EP 5112 235
5.17.8 Setting Up the Counter 235
5.17.9 Counter Functions 236
5.17.10 Additional Counter Features 242
5.18 Digital Frequency Counter Module EP-5212 248
5.18.1 LED Indicators EP-5212 249
5.18.2 Specifications EP-5212 250
5.18.3 Modifiable Parameters for EP-5212 251
5.18.4 Diagnostic Data EP-5212 252
5.18.5 Process Data† Inputs EP-5212 253
5.18.6 Process Data† Outputs EP-5212 254
5.18.7 Function Frequency Counting 254
5.19 Serial Communication Module EP-5261 257
5.19.1 LED Indicators EP-5261 260
5.19.2 Specifications EP-5261 261
5.19.3 Modifiable Parameters for EP-5261 262
5.19.4 Diagnostic Data EP-5261 262
5.19.5 Data Transfer 263
5.20 SSI Encoder Interface Module EP-5311 268
5.20.1 LED Indicators EP-5311 269
5.20.2 Specifications EP-5311 270
5.20.3 Modifiable Parameters for EP-5311 270
5.20.4 Diagnostic Data EP-5311 271
5.20.5 Process Data Inputs EP-5311 273
5.21 Digital Pulse Width Modulation Output Module EP-5422 273
5.21.1 LED Indicators EP-5422 274
5.21.2 Specifications EP-5422 275
5.21.3 Modifiable Parameters for EP-5422 276
5.21.4 Diagnostic Data EP-5422 276
5.21.5 Process† Data Inputs EP-5422 276
5.21.6 Process Data† Outputs EP-5422 277
5.22 Digital Pulse Width Modulation Output Module EP-5442 277
5.22.1 LED Indicators EP-5442 279

5.22.2 Specifications EP-5442 280
5.22.3 Modifiable Parameters for EP-5442 281
5.22.4 Diagnostic Data EP-5442 281
5.22.5 Process† Data Inputs EP-5442 282
5.22.6 Process Data† Outputs EP-5442 282
5.23 IO-Link Communication module EP-5324 283
5.23.1 IO-Link overview 284
5.23.2 LED Indicators EP-5324 288
5.23.3 Specifications EP-5324 289
5.23.4 Modifiable Parameters for EP-5324 289
5.23.5 Diagnostic Data EP-5324 293
5.23.6 Process Data Inputs EP-5324 295
5.23.7 Process Data Outputs EP-5324 296
5.23.8 Network Adapters-Dependent Process data widths 297
5.23.9 IO-Link Communication module EP-5324 event codes 298
5.24 Analog Input Module EP-3164 299
5.24.1 LED Indicators EP-3164 300
5.24.2 Specifications EP-3164 301
5.24.3 Modifiable Parameters for EP-3164 302
5.24.4 Diagnostic Data EP-3164 302
5.24.5 Process Data† Inputs EP-3164 303
5.24.6 Measurement Range EP-3164 303
5.25 Analog Input Module EP-3264 305
5.25.1 LED Indicators EP-3264 306
5.25.2 Specifications EP-3264 307
5.25.3 Modifiable Parameters for EP-3164 308
5.25.4 Diagnostic Data EP-3264 308
5.25.5 Diagnostic Data EP-3264 309
5.25.6 Process Data† Inputs EP-3264 310
5.25.7 Measurement Range EP-3264 310
5.26 Analog Input Module EP-3664 312
5.26.1 LED Indicators EP-3664 313
5.26.2 Specifications: EP-3664 314
5.26.3 Modifiable Parameters EP-3664 315
5.26.4 Diagnostic Data EP-3664 315
5.26.5 Process Data† Inputs EP-3664 317
5.26.6 Measurement Range EP-3664 317
5.27 Analog Input Module EP-3124 319
5.27.1 LED Indicators EP-3124 320
5.27.2 Specifications EP-3124 321
5.27.3 Modifiable Parameters for EP-3124 322
5.27.4 Diagnostic Data EP-3124 322
5.27.5 Process Data† Inputs EP-3124 323
5.27.6 Measurement Range EP-3124 323
5.27.7 Measurement Range EP-3124 324
5.28 Analog Input Module EP-3368 325
5.28.1 LED Indicators EP-3368 326
5.28.2 Specifications EP-3368 327

5.28.3 Modifiable Parameters for EP-3368 328
5.28.4 Diagnostic Data EP-3368 328
5.28.5 Process Data† Inputs EP-3368 329
5.28.6 Measurement Range EP-3368 330
5.29 Analog Input Module EP-3468 330
5.29.1 LED Indicators EP-3468 331
5.29.2 Specifications EP-3468 332
5.29.3 Modifiable Parameters for EP-3468 333
5.29.4 Process Data† Inputs EP-3468 333
5.29.5 Diagnostic Data EP-3468 334
5.29.6 Measurement Range EP-3468 335
5.30 Analog Output Module EP-4164 336
5.30.1 LED Indicators EP-4164 337
5.30.2 Specifications EP-4164 338
5.30.3 Modifiable Parameters for EP-4164 339
5.30.4 Diagnostic Data EP-4164 339
5.30.5 Process Data† Outputs EP-4164 340
5.30.6 Value Range† EP-4164 340
5.31 Analog Output Module EP-4264 342
5.31.1 LED Indicators EP-4264 343
5.31.2 Specifications EP-4264 344
5.31.3 Modifiable Parameters for EP-4264 345
5.31.4 Diagnostic Data EP-4264 345
5.31.5 Process Data† Outputs EP-4264 347
5.31.6 Value Range† EP-4264 347
5.32 Analog Input Module EP-3704 349
5.32.1 LED Indicators EP-3704 350
5.32.2 Specifications EP-3704 351
5.32.3 Modifiable Parameters for EP-3704 352
5.32.4 Diagnostic Data EP-3704 353
5.32.5 Process Data† Inputs EP-3704 354
5.32.6 Resistance Measurement Range EP-3704 355
5.32.7 Temperature Measurement Ranges EP-3704 356
5.32.8 Process Alarm EP-3704 357
5.33 Analog Input Module EP-3804 358
5.33.1 LED Indicators EP-3804 359
5.33.2 Specifications EP-3804 360
5.33.3 Modifiable Parameters for EP-3804 361
5.33.4 Diagnostic Data EP-3804 362
5.33.5 Process Data† Inputs EP-3804 364
5.33.6 Voltage Measurement Ranges EP-3804 364
5.33.7 Temperature Measurement Ranges EP-3804 364
5.33.8 Process Alarm EP-3804 366
5.34 Power Measurement Module EP-1813 367
5.34.1 LED Indicators EP-1813 372
5.34.2 Specifications EP-1813 373
5.34.3 Modifiable Parameters for EP-1813 374
5.34.4 Diagnostic Data EP-1813 377

5.34.5 Process Data† Inputs EP-1813 378
5.34.6 Process Data† Outputs EP-1813 379
5.34.7 Process alarm† EP-1813 379
5.34.8 Conversion of the adjustable measuring values EP-1813 380
5.34.9 Raw parameter data for acyclic services (not relevant with MODBUS application) 382
5.35 Power-feed Module for Input Current Path EP-7631 385
5.35.1 LED Indicators EP-7631 386
5.35.2 Specifications EP-7631 387
5.36 Power-feed Module for Output Current Path EP-7641 387
5.36.1 LED Indicators EP-7641 388
5.36.2 Specifications EP-7641 389
5.37 Safe Feed-in Modules EP-1901, EP-1902, and EP-1922 390
5.38 Potential Distribution Module for Input Current Path EP-711F 391
5.38.1 Specifications EP-711F 392
5.39 Potential Distribution Module for Output Current Path EP-751F 393
5.39.1 Specifications EP-751F 394
5.40 Potential Distribution Module for Functional Earth EP-700F 395
5.40.1 Specifications EP-700F 396
5.41 0-V Potential Distribution Module for Input Current Path EP-710F 396
5.41.1 Specifications EP-710F 397
5.42 0-V Potential Distribution Module for Output Current Path EP-750F 398
5.42.1 Specifications EP-750F 399
5.43 Empty Slot Module EP-8310 399
5.43.1 Specifications EP-8310 400
5.44 Termination Kit EP-8301 400
5.44.1 Specifications EP-8301 400

Section 6: Installation 401

6.1 Preparations for Assembly 401
6.1.1 Environmental Conditions 401
6.1.2 DIN Rail 401
6.1.3 Stripping Lengths 402
6.1.4 Unpacking and Delivery 402
6.1.5 Use in a Potentially Explosive Atmosphere 402
6.1.6 Installation Orientation 403
6.1.7 Clearances 404
6.1.8 Calculation of Space Requirements 405
6.1.9 Installation Sequence 406
6.1.10 Arrangement of SIL Modules 406
6.1.11 Preparation and the Required Tool 406
6.2 Assembling the RSTi-EP Station 407
6.3 Attaching the Marker 411
6.3.1 Attaching the Swivel Marker 411
6.4 Wiring 411
6.4.1 Wiring of Modules with Standard Connectors 412
6.4.2 Wiring of Modules with HD Connectors EP-8360 412

6.5 Insulation Test 413

Section 7: Earthing and Shielding 415

7.1 Earthing of Shielded Cables 416
7.1.1 Shielded Cables Increase Interference Resistance 416
7.1.2 Proper Use of Shielded Cables 417
7.1.3 Effective Shielding 418
7.2 Potential Ratios 420
7.2.1 Basic Aspects 420
7.2.2 Potential-Free Design 420
7.2.3 Non-Isolated Design 421
7.3 Electromagnetic Compatibility (EMC) 421
7.3.1 Ensuring EMC 421
7.3.2 Earthing of Inactive Metal Parts 422
7.3.3 PE Connection 422
7.3.4 Unearthed Operation 422
7.3.5 DIN Rails 422
7.3.6 Cabinet Design According to EMC Guidelines 423
7.4 Shielding of Cables 424
7.4.1 Equipotential Bonding 425
7.4.2 Inductance Wiring 425

Section 8: Commissioning 427

8.1 Requirements 427
8.2 Configuring EPXPNS001/EPXPNS101 428
8.2.1 Configuring EPXPNS001/EPXPNS101 Parameters 429
8.2.2 Adding EPXPNS001/ EPXPNS101 Modules to a Remote Node 434
8.2.3 Configuring EPXPNS001/EPXPNS101 Module Parameters 435
8.3 Configuring EPXPBS001 435
8.3.1 Adding Slaves and Modules 435
8.3.2 Configuring Module Data Areas 439
8.3.3 Configuring DP-V1 Settings for a Slave 440
8.4 Configuring EPXETC001 443
8.5 Configuring EPXMBE001/EPXMBE101 446
8.6 Configuring EPXEIP001 446
8.7 Configuring EP-5324 448

Section 9: Web Server 453

9.1 Requirements 454
9.1.1 Operating System 454
9.1.2 Browser 454
9.1.3 Device Drivers 454
9.2 Starting the Web Server 456
9.2.1 Activating the Ethernet Socket 456
9.3 Setting up Registration Data and Password Protection 458
9.4 Navigation and Operating Instructions 459

9.4.1 Setting the Language 459
9.4.2 Zooming the View In/Out 460
9.4.3 Quick View (Tooltip) of Detailed Values 460
9.5 Displaying and Editing the Network Adapter Status 461
9.5.1 Resetting the Web Server 462
9.5.2 Resetting the Network Adapter to Factory Settings 462
9.5.3 Accessing Network Adapter Parameters 463
9.6 Displaying Module Data and Editing Parameters 463
9.7 Displaying Node Information 465
9.7.1 Displaying Process Data 465
9.7.2 Displaying Diagnostic Data 465
9.7.3 Web Server in Force Mode 466
9.7.4 Open the Detail View of the Station in Force Mode 467
9.7.5 Filtering the Module View 468
9.7.6 Resetting Filters 468
9.7.7 Manually Switching Outputs (Forcing) 469
9.7.8 Modules with Registers 469
9.7.9 Ending/Deactivating Forced Operations 470
9.8 Updating Firmware 470
9.8.1 Recovery Mechanism for RSTi-EP Network adapter: - 473
9.9 Web Server About Help 474
9.9.1 Exporting Log Data, Saving a Service File 474

Section 10: Replacing Components 475
10.1 Removing/Replacing the Plug-in Unit 475
10.2 Replacing the Electronic Unit 476
10.3 Replacing an I/O Module 481
10.4 Removing/Replacing Connectors 483
10.5 Removing/Replacing Cables 485

Section 11: Disassembly and Disposal 487
11.1 Disassembling the RSTi-EP Station 487
11.2 Disposing of the RSTi-EP Station 487

Section 12: LED Indicators and Troubleshooting 489
12.1 Fieldbus Network Adapters 490
12.2 I/O Modules 495

Section 13: IO-Link Device Configuration 502
13.1 RSTi-EP IO-Link configurator 502
13.2 Installing RSTi-EP IO-Link configurator 504
13.3 Operating the RSTi-EP IO-Link configurator 504
13.3.1 Displaying the starting page 504
13.3.2 IO-Link port overview 506
13.3.3 IO-Link device detailed view 507
13.3.4 Displaying the context menu 508

13.3.5 Creating a new project 508
13.3.6 Saving a project 508
13.3.7 Opening a project 508
13.3.8 Changing the language 508
13.3.9 Opening the IODDfinder in the standard browser 509
13.4 Editing IO-Link device configurations 509
13.4.1 Assigning the IO-Link device to an IO-Link port 509
13.4.2 Changing the device type 510
13.4.3 Removing the IO-Link device assignment 510
13.4.4 Editing the IO-Link device parameters 510
13.4.5 Determining the process data length 511
13.4.6 Finding & rectifying parameter errors 511
13.5 Editing IO-Link device configurations online 512
13.5.1 Connecting to the Network adapter 512
13.5.2 Activating an IO-Link port 512
13.5.3 Deactivating an IO-Link Port 513
13.5.4 Identifying a connected IO-Link device 513
13.5.5 Downloading IODDs for a connected IO-Link device 514
13.5.6 Reading out IO-Link device parameters 514
13.5.7 Writing IO-Link device parameters 514
13.5.8 Displaying process data 515
13.5.9 Displaying diagnosis 515

Section 14: Accessories and Replacement Parts 516

14.1 Accessories 516
14.2 Replacement Parts 516
14.2.1 Replacement Parts for Network Adapters 517
14.2.2 Replacement Parts for Modules 517
General Contact Information 525
Technical Support 525

Warnings and Caution Notes as Used in this Publication

⚠ WARNING

Warning notices are used in this publication to emphasize that hazardous voltages, currents, temperatures, or other conditions that could cause personal injury exist in this equipment or may be associated with its use.

In situations where inattention could cause either personal injury or damage to equipment, a Warning notice is used.

⚠ CAUTION

Caution notices are used where equipment might be damaged if care is not taken.

Note: Notes merely call attention to information that is especially significant to understanding and operating the equipment.

These instructions do not purport to cover all details or variations in equipment, nor to provide for every possible contingency to be met during installation, operation, and maintenance. The information is supplied for informational purposes only, and Emerson makes no warranty as to the accuracy of the information included herein. Changes, modifications, and/or improvements to equipment and specifications are made periodically and these changes may or may not be reflected herein. It is understood that Emerson may make changes, modifications, or improvements to the equipment referenced herein or to the document itself at any time. This document is intended for trained personnel familiar with the Emerson products referenced herein.

Emerson may have patents or pending patent applications covering subject matter in this document. The furnishing of this document does not provide any license whatsoever to any of these patents.

Emerson provides the following document and the information included therein as-is and without warranty of any kind, expressed or implied, including but not limited to any implied statutory warranty of merchantability or fitness for particular purpose.

Section 1: Introduction

This manual describes the **RSTi-EP remote I/O system**. The products of the RSTi-EP series are intended for use in industrial automation. A RSTi-EP station with network adapter and connected modules is intended for the decentralized control of systems or sub-systems. Via the network adapter every module of a station is integrated into a fieldbus structure and connected to the primary control unit. The RSTi-EP products conform to protection class IP 20 (in accordance with DIN EN 60529), they can be used in potentially explosive atmospheres rated as Zone 2 (as per Directive 2014/34/EU) and in safe zones.

The observance of the supplied documentation is part of the intended use. The products described in this manual may only be used for the intended applications and only in connection with certified third-party devices or components.

Introductory material may be found in this Section along with a system overview.

Section 2 provides information about **Safety**.

Section 3 provides **Configuration** instruction.

Section 4 provides **Detailed Descriptions of the Fieldbus Network Adapters**.

Section 5 provides **Detailed Description of I/O Modules**

Section 6 provides information on **Installation** and set-up.

Section 7 provides important information on **Earthing and Shielding.**

Section 8 provides information on **Commissioning.**

Section 9 covers the **Web Server.**

Section 10 provides detailed instructions for **Replacing Components**

Section 11 describes **Disassembly and Disposal** of the RSTi-EP station.

Section 12 covers **LED Indicators and Troubleshooting**

Section 13 provides information on **IO-Link Device Configuration**.

Section 14 provides ordering information for **Accessories and Replacement Parts**

Appendix A is a **Decimal/Hexadecimal Conversion Table.**

Appendix B provides a **Marine Certification Table.**

Appendix C provides a **Serial Number Tracking Table.**

⚠CAUTION

- Prior to hot-swapping I/O modules, refer to Section, Replacing the Electronic Unit

1.1 Revisions in this Manual

Rev	Date	Description
L	May 2021	Added Appendix D: Product Certifications and Installation Guidelines for Conformance Added Section 4.2.7 RSTi-EP PROFINET Channel Diagnostic Alarm Reporting Updated Section 4.4 to correct address ranges for the EPXMBE001 Included various errata notes from SFDC
K	Nov 2019	Added support for- • EtherNet/IP Network Adapter EPXEIP001 • Power Measurement Module EP-1813 • IO-Link Communication Module EP-5324 IO-Link Configurator Tool
J	Oct 2019	Following Emerson's acquisition of this product, changes have been made to apply appropriate branding and registration of the product with required certification agencies. No changes to material, process, form, fit or functionality. Added two new modules: • Digital Input, 16 Points, Negative Logic, 24Vdc • Digital Output, 16 Points, Negative Logic, 24Vdc
H	Oct 2018	Updates for MRP specification for EPXPNS101
G	Sep-2018	Reformat to improve readability, especially tables and page breaks. Added new products: EPXPNS101 and, EP-3664 Updated the Marine Certification Appendix B, added Appendix C
F	Apr 2018	Added Appendix B, a Marine Certification Table.
E	Nov 2017	Added EPXMBE101 module, EP-8400 Plug Kit and updates to ATEX information
D	July 2017	Added support for CE100, including the following procedures: • Replacement of Internal Super Capacitor (EPSACC001) • Replacement of RTC Battery
C	Sept-2016	Added three new modules: • Digital Input Module EP-1804 • Serial Communication Module EP-5261 • SSI Encoder Interface Module EP-5311
B	Apr-2016	Changes required as part of ATEX certificate update
A	Feb-2016	Added EtherCAT logo after certification
-	Dec-2015	Initial release

1.2 PACSystems Documentation

1.2.1 PACSystems Manuals

PACSystems RX3i and RSTi-EP CPU Reference Manual	GFK-2222
PACSystems RX3i and RSTi-EP CPU Programmer's Reference Manual	GFK-2950
PACSystems RX3i and RSTi-EP TCP/IP Ethernet Comm User Manual	GFK-2224
PACSystems TCP/IP Ethernet Communications Station Manager User Manual	GFK-2225
C Programmer's Toolkit for PACSystems	GFK-2259
PACSystems Battery and Energy Pack Manual	GFK-2741
PAC Machine Edition Logic Developer Getting Started	GFK-1918
PACSystems Process Systems Getting Started Guide	GFK-2487
PACSystems RX3i & RSTi-EP PROFINET I/O Controller Manual	GFK-2571

1.2.2 RX3i Manuals

PACSystems RX3i System Manual	GFK-2314
PACSystems RX3i PROFINET Scanner Manual	GFK-2737
PACSystems RX3i CEP PROFINET Scanner User Manual	GFK-2883

In addition to these manuals, datasheets and product update documents describe individual modules and product revisions. The most recent PACSystems documentation is available on the Emerson product support website https://www.emerson.com/Industrial-Automation-Controls/support

1.3 System Overview

The modular RSTi-EP system supports common fieldbus systems and conforms to IEC 61131-2. Each station is assigned a bus address in the fieldbus structure. Only the network adapter is fieldbus-specific; the I/O modules are independent of the fieldbus.

Up to 64 active I/O modules can be combined in a RSTi-EP station. The largest expansion possible depends on the maximum amount of data transmitted by the selected fieldbus, the configuration, parameter, or process data for the module types provided. The following components belong to the RSTi-EP product series:

- Fieldbus network adapter (gateway): Head station for converting the respective fieldbus protocol on the RSTi-EP system bus
- Active I/O modules:
  - Modules with digital input (DI) or digital output (DO) with 2, 4, 8 or 16 channels
  - Modules with analogue input (AI) or analogue output (AO) with 4 or 8 channels
  - Pulse width modulation modules (PWM)
  - Digital counter modules (CNT)
- Passive I/O modules (no fieldbus communication)
  - 24 V power-feed modules (PF) for input or output current
  - Potential distribution modules (AUX)
  - Empty modules acting as placeholders (ES)
- Functional safety modules
  - Safe power-feed modules (EP-19xx) 24 V for output current, providing one or two inputs (with two channels each) for safety circuits
- Mechanical fixing elements
  - End bracket
  - End plate

1.3.1 Dimensions of the RSTi-EP Components

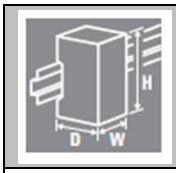	**Height (H)**	**Width (W)**	**Depth (D)**
Network adapter	120.0 mm (4.72 in)	52.0 mm (2.05 in)	76.0 mm (2.99 in)
I/O module	120.0 mm (4.72 in)	11.5 mm (0.45 in)	76.0 mm (2.99 in)
End plate	120.0 mm (4.72 in)	3.5 mm (0.14 in)	76.0 mm (2.99 in)
End bracket	120.0 mm (4.72 in)	8.0 mm (0.32 in)	mm (1.42 in)

1.3.2 Double-click Installation

The RSTi-EP station modules can be installed quickly and simply. When attaching the module to the DIN rail, a clear clicking noise can be heard, which means that the module has clicked into place. In the second step, which involves pushing the module being installed together with the neighboring module, a further clicking noise indicates that the modules have been correctly connected to each other.

1.4 General Description of the Fieldbus Network Adapters

A fieldbus network adapter is used to connect the station I/O modules to the fieldbus. All the data traffic with the programmable logic controller including the diagnostic messages is exchanged via the network adapter. The integrated power supply provides the network adapter and all connected modules with power.

A detailed description of the individual network adapter types is available under Detailed Descriptions of the Fieldbus Network Adapters

Figure 1: Features of the Fieldbus Network Adapters

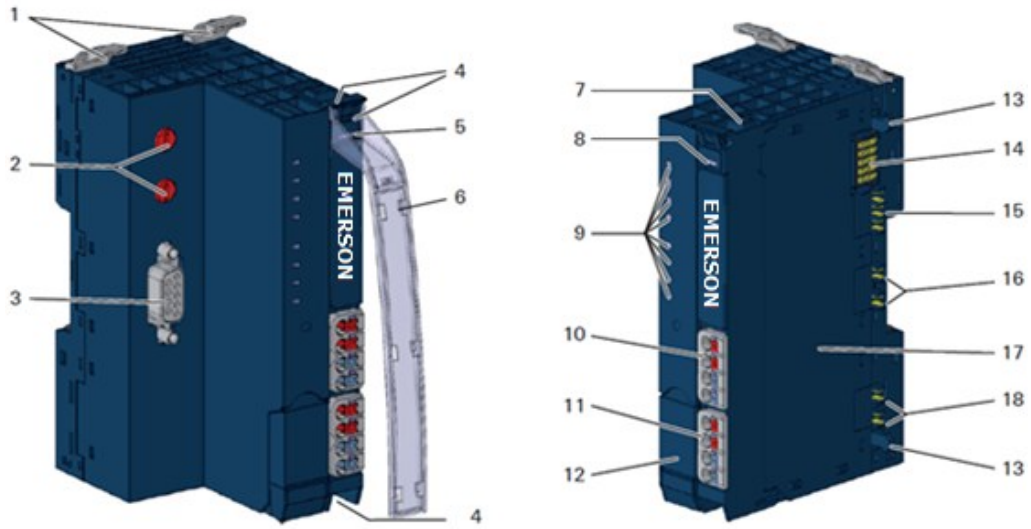

Fieldbus Network Adapter (Example: EPXPNS001)

1. Catch lever for securing the DIN rail
2. Rotary switch (only PROFIBUS®)
3. Data line connection (e.g. SUB-D socket)
4. Seats for module markers
5. Type designation
6. Optional: swivel marker for labelling modules and channels
7. Connector frame unlocking device
8. LED power supply network adapter
9. Network adapter status LEDs
10. Power supply connector for the system and input modules
11. Power supply connector for output modules
12. Service flap
13. Latching hook for latching onto module sides
14. System bus
15. System current path
16. Input current path
17. Type plate with block diagram
18. Output current path

1.5 General Technical Data for the Fieldbus Network Adapter

Item	Description	
Type of connection	Spring-style	Single-wired, Fine-wired
		Conductor cross-section 0.14 – 1.5 mm^2 (AWG 16 – 26)
Configuration interface	USB 2.0	
Dimensions	Height	120.0 mm (4.72 in) (with release lever: 128.0 mm / 5.04 in)
	Width	52.0 mm (2.05 in)
	Depth	76.0 mm (2.99 in)
Protection class (DIN EN 60529)	IP 20	
Flammability rating UL 94	V-0	
Temperature data (Network Adapter Power Supply)	Operation (horizontal installation)	-20°C to +60°C (- 4 to +140 °F) (8-A power supply) -20°C to +55°C (- 4 to +131 °F) (10-A power supply)
	Operation (vertical installation)	-20°C to +55°C (- 4 to +131 °F) (6-A power supply) -20°C to +50°C (- 4 to +122 °F) (8-A power supply)
	Storage, transport	-40°C to +85°C (- 40 to +185 °F)
Humidity	Operation	95 %, non-condensing as per IEC 61131-2
	Storage, transport	95 %, non-condensing as per IEC 61131-2
Air pressure	Operation	≥ 795 hPa (altitude ≤ 2,000 m) per IEC 61131-2
	Storage, transport	≥ 700 hPa (altitude ≤ 3,000 m) per IEC 61131-2
Vibration resistance	5 Hz ≤ f ≤ 8.4 Hz: 3.5 mm amplitude, per IEC 60068-2-6 8.4 Hz ≤ f ≤ 150 Hz: 1 g acceleration, per IEC 60068-2-6	
Shock resistance	15 g over 11ms, half sinewave, per IEC 60068-2-27	
Potential isolation	Test voltage	max. 28.8 V within one channel 500Vdc field/system
	Pollution severity level	2
	Overvoltage category	II
Approvals and Standards	$_{c}UL_{us}$ Ordinary Locations	UL 508, CSA C22.2 No. 0-M91
	$_{c}UL_{us}$ Hazardous Locations Class 1 Division 2, Gr. A, B, C, D	ISA 12.12.01: 2007 CSA C22.2 No. 213-M1987 (Reaffirmed 2008)
	Potentially explosive atmosphere Zone 2†	ATEX Directive 2014/34/EU
	Explosion protection	EN 60079-0:2012+A11:2013 and EN 60079-15:2010 IEC 60079-0:2011 and IEC 60079-15:2010
	EMC	EN61000-6-2: 2005, EN61000-6-4: 2007 + A1:2011, (partial standards, per the requirements of EN 61131-2: 2007)
	FCC Compliance	47 CFR 15: 2011 (Class A)
† Unless otherwise noted within the product-specific technical data.		
All product-specific technical data is available in the corresponding product description in Section 4, Detailed Descriptions of the Fieldbus Network Adapters		

1.6 General Description of I/O Modules

Figure 2: Features of the RSTi-EP I/O Modules

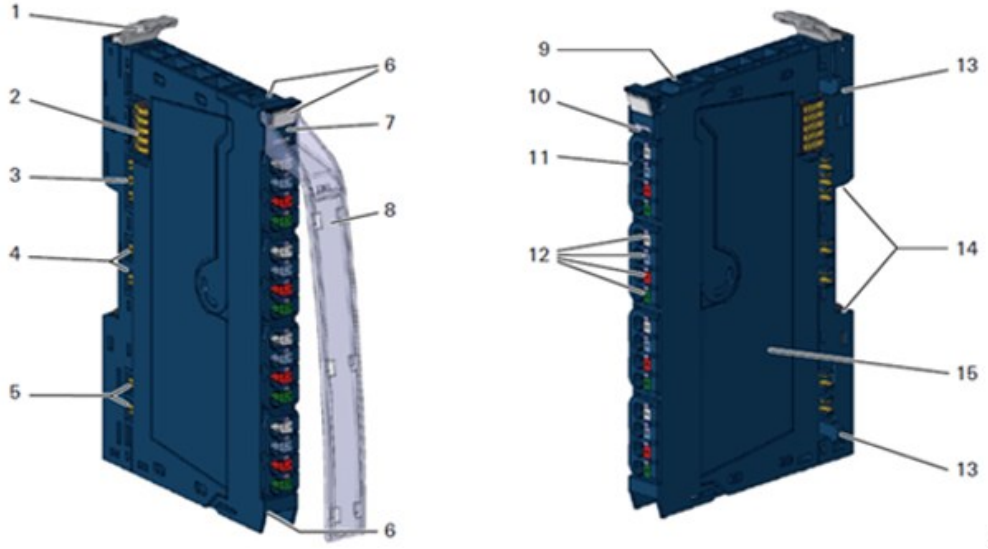

1.6.1 I/O module (Example EP-1214)

1. Catch lever for securing the DIN rail
2. System bus
3. System current path
4. Input current path
5. Output current path
6. Seats for module markers
7. Type designation
8. Optional: swivel marker for labelling modules and channels
9. Connector frame unlocking device
10. Module status LED (collective message)
11. Connector
12. Channel status LEDs
13. Latching hook for latching onto sides of modules
14. DIN rail foot
15. Type plate

Figure 3: I/O Module Components

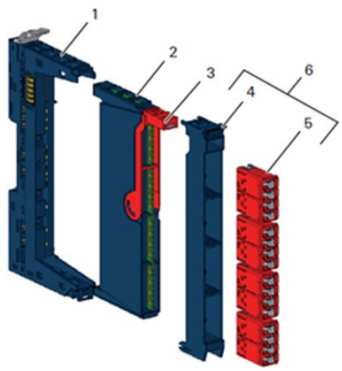

1. Basic module
2. Electronic unit
3. Removal lever for electronic unit
4. Connector frame
5. Connector
6. Plug-in unit

Color Coding

The removal levers for the electronic unit and the connectors are color-coded as follows:

- Blue standard
- White power supply
- Red 230 V
- Yellow SIL products

A detailed description of the individual module types is available under Section 5, Detailed Description of I/O Modules.

1.6.2 Standard Connector

The connection frame can take up to four connectors, and four conductors can be connected to each connector. *Spring-style* technology allows for fine-wired conductors with crimped wire-end ferrules or ultrasonically welded conductors, each with a maximum cross-section of 1.5 mm², to be inserted easily through the opening in the clamping terminal without having to use tools. To insert fine-wired conductors without wire-end ferrules, the pusher must be pressed in with a screwdriver (refer to Section, Wiring).

Figure 4: Connector with four Conductor Connection

Features and Specifications:

- conductor cross-section 0.14 to 1.5 mm²
  (AWG 16 – 26)
- maximum ampacity: 10 A
- 4-pole

The pushers are color-coded for the following connections:

- White Signa
- Blue GND
- Green Functional Earth (FE)
- Red 24V

1.6.3 HD Connector EP-8360

The connection frame can take up to four times two HD connectors EP-8360, and qualified SAI cables† with a cross-section from 0.14 to 0.35 mm^2 can be connected to each connector via insulation displacement contact (IDC). Refer to Section, Wiring

Figure 5: Connector EP-8360 for HD Modules

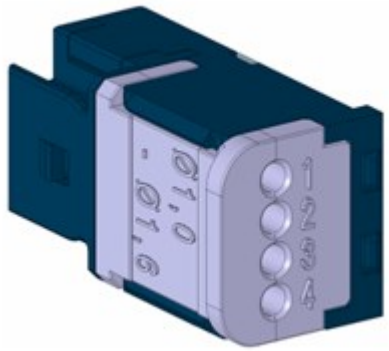

Features and Specifications:

- conductor cross-section: 0.14 to 0.35 mm²
  (AWG 22-26)
- insulation diameter 1.0 to 1.6 mm
  (0.04 to 0.06")
- maximum current capacity: 1 A
- 4-pole

1.6.4 Cable Protection

The modules listed in the following table do not have a fused sensor/actuator power supply. Here, all cables to the connected sensors/actuators must be fused corresponding to their conductor cross-sections (per Standard DIN EN 60204-1, section).

Description	Part Number
Digital input modules	
Digital Input, 4 Points, Positive Logic 24Vdc, 2-, 3-, or 4-Wire	EP-1214
Digital Input, 8 Points, Positive Logic, 24Vdc 2-Wire	EP-1218
Digital Input, 8 Points, Positive Logic, 24Vdc 3-Wire	EP-1318
Digital Input, 4 Points, Positive Logic 24Vdc, 2-, 3-, or 4-Wire, Time stamp	EP-12F4
Digital Input, 4 Points 110/230Vac (65 – 277Vac), 2-Wire, Isolated	EP-1804
Digital output modules	
Digital Output, 4 Points, Positive Logic 24Vdc, 0.5A, 2-, 3-, or 4-Wire	EP-2214
Digital Output, 4 Points, Positive Logic 24Vdc, 2.0A, 2-, 3-, or 4-Wire	EP-2614
Digital Output, 4 Points, Positive/Negative Logic 24Vdc, 2.0A, 2-, 3-, or 4-Wire	EP-2634
Analog input modules	
Analog Input, 4 Channels Voltage/Current 16 Bits 2-, 3-, or 4-Wire	EP-3164
Analog Input, 4 Channels Voltage/Current 12 Bits 2-, 3-, or 4-Wire	EP-3124
Functional modules	
2 Channels PWM Output, Positive Logic, 24Vdc, 0.5 A	EP-5422
2 Channels PWM Output, Positive Logic, 24Vdc, 2 A	EP-5442
1 Channel High Speed Counter, AB 100 kHz 1 DO 24Vdc, 0.5A	EP-5111
2 Channel High Speed Counter, AB 100 kHz	EP-5112
2 Channel Frequency Measurement, 100 kHz	EP-5212
1 Channel Serial Communications, 232, 422, 485	EP-5261
1 Channel SSI Encoder, BCD or Gray-Code Format, 5/24 Vdc	EP-5311
Potential distribution modules	
Power Module, 16 Channels 24Vdc Potential Distribution +24 Vdc from Input Current Path	EP-711F
Power Module, 16 Channels 24Vdc Potential Distribution +24 Vdc from Output Current Path	EP-751F
Power Module, 16 Channels 24Vdc Potential Distribution +0Vdc from Input Current Path	EP-710F
Power Module, 16 Channels 24Vdc Potential Distribution +0Vdc from Output Current Path	EP-750F

1.7 General Technical Data for I/O Modules

Item	Description	
Type of connection	Spring-style	Single-wired, fine-wired
		Conductor cross-section 0.14 – 1.5 mm^2 (AWG 16 – 26)
	IDC (EP-3368, EP-3468)	Single-wired, fine-wired
		Conductor cross-section 0.14 – 0.35 mm2 (AWG 22 – 26)
Dimensions	Height	4.72 in (120.0 mm) w/ release lever: 128.0 mm (5.04 in)
	Width	11.5 mm (0.45in)
	Depth	76.0 mm (2.99 in)
Protection class (DIN EN 60529)	IP 20	
Flammability rating UL 94	V-0	
Temperature data	Operation	-20°C to +60°C (- 4 to +140 °F)
	Storage, transport	-40°C to +85°C (- 40 to +185 °F)
Humidity	Operation, storage, transport	5 % to 95 %, non-condensing per IEC 61131-2
Air pressure	Operation	≥ 795 hPa (altitude ≤ 2,000 m) per IEC 61131-2
	Storage, transport	≥ 700 hPa (altitude ≤ 3,000 m) per IEC 61131-2
Vibration resistance	5 Hz ≤ f ≤ 8.4 Hz: 3.5-mm amplitude as per IEC 60068-2-6 8.4 Hz ≤ f ≤ 150 Hz: 1-g acceleration as per IEC 60068-2-6	
Shock resistance	15 g over 11ms, half sinewave, as per IEC 60068-2-27	
Potential isolation	Test voltage	max. 28.8 V within one channel 500Vdc field/system
	Pollution severity level	2
	Overvoltage category	II
Approvals and Standards	$_C$UL$_{US}$ Ordinary Locations	UL 508, CSA C22.2 No. 0-M91
	$_C$UL$_{US}$ Hazardous Locations Class 1 Division 2, Gr. A, B, C, D	ISA 12.12.01: 2007 CSA C22.2 No. 213-M1987 (Reaffirmed 2008)
	Potentially explosive atmosphere Zone 2†	ATEX Directive 2014/34/EU
	Explosion protection	EN 60079-0:2012+A11:2013 and EN 60079-15:2010 IEC 60079-0:2011 and IEC 60079-15:2010

Item	Description	
Type of connection	Spring-style	Single-wired, fine-wired
		Conductor cross-section 0.14 – 1.5 mm^2 (AWG 16 – 26)
	IDC (EP-3368, EP-3468)	Single-wired, fine-wired
		Conductor cross-section 0.14 – 0.35 mm2 (AWG 22 – 26)
	EMC	EN61000-6-2: 2005, EN61000-6-4: 2007 + A1:2011, (partial standards as per the requirements of EN61131-2: 2007)
	FCC Compliance	47 CFR 15: 2011 (Class A)
	PLC	IEC 61131-2
Type of connection	Spring-style	Single-wired, fine wired
† Unless otherwise noted within the product-specific technical data.		
All product-specific technical data is available in the corresponding product description under Section 5, Detailed Description of I/O Modules.		

1.8 Mechanical Fixing Elements

The station is fixed in the installation position by an end bracket at either side. The last I/O module is protected against dust by a cover plate, into which the second end bracket is inserted and screwed to the mounting rail. Every RTSi-EP network adapter is supplied with a termination kit.

Figure 6: RSTi-EP Station Fixing Elements

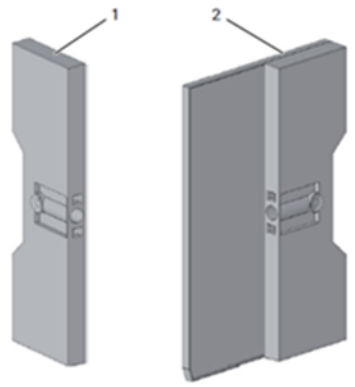

1) End bracket (left end, on the network adapter side)

2) Termination kit with end plate and end bracket (right end)

For vertical installation, a special end bracket must also be installed below the station.

1.9 Type Plate

Each network adapter and each module feature a type plate, which includes identification information, the key technical specifications and a block diagram. In addition, a QR code allows for direct online access to the associated documentation. The software for reading the QR code must support inverted QR codes. A breakdown of the serial numbers can be found in the table provided in the annex.

Figure 7: Type Plate (Example of EP-1214

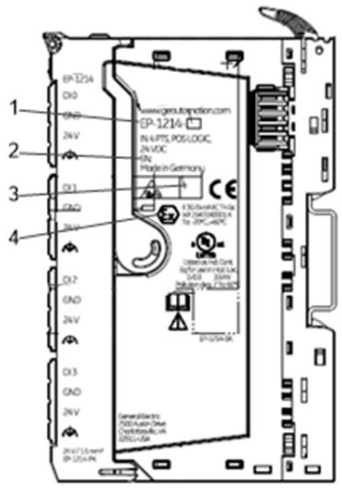

1. Product number
2. Serial number
3. Manufacturing code
4. ATEX marking

1.10 Markers

A wide range of markers are available as accessories for labelling equipment.

1.10.1 Swivel Marker

RSTi-EP I/O Label Markers (EP-8100) allow for modules and all respective channels and lines to be labelled in detail. They are attached to the connector frame.

The following labels are available for the labelling:

- Paper labels for printing with laser printers (Part No. EP-8101)
  - White
  - Yellow

Figure 8: Module with Swivel Marker

Section 2: Safety

This Section includes general safety instructions for handling the RSTi-EP system. Specific safety instructions for specific tasks and situations are given at the appropriate places in the documentation.

When using remote I/O RSTi-EP modules, refer to the Module for Functional Safety Manual (GFK-2956).

2.1 General Safety Notice

Work on the RSTi-EP products may only be performed by qualified personnel with the support of trained persons. As a result of their professional training and experience, such personnel are qualified to perform the necessary work and identify any potential risks.

Before any work is carried out on the products (installation, maintenance, retrofitting), the power supply must be switched off and secured against being switched on again. Work may be carried out with safety extra-low voltage.

The manual provided with the equipment shall be followed in detail to assure proper and safe operation.

A stabilized 24Vdc power supply shall be used.

All field wiring intended for connection to the power terminal shall consist of copper conductors with the insulation locally removed. Additional intermediate connecting parts, other than ferrules, shall not be used.

When working during continued operations, the emergency stop mechanisms must not be made ineffective. If you need technical help, contact Technical Support. For phone numbers and email addresses, refer to the General Contact Information page in the front of this manual.

If a malfunction on a RSTi-EP product cannot be fixed after following the recommended measures (refer to Section 12, LED Indicators and Troubleshooting), the product in question must be sent back to Emerson.

Emerson does not assume any liability if the base or electronic module has been tampered with.

2.1.1 Electrostatic Discharge

RSTi-EP products can be damaged or destroyed by electrostatic discharge. When handling the products, the necessary safety measures against electrostatic discharge (ESD) according to IEC 61340-5-1 and IEC 61340-5-2 must be observed.

All devices are supplied in ESD-protected packaging. The packing and unpacking as well as the installation and disassembly of a device may only be carried out by qualified personnel and in accordance with the ESD information.

2.1.2 Open Equipment

RSTi-EP products are open equipment (having live electrical parts that may be accessible to users) that may only be installed and operated in lockable housings, cabinets or electrical operations rooms. Only trained and authorized personnel may access the equipment.

For applications requiring functional safety or in order to maintain compliance with the ATEX Directive [Class 1, Zone 2 area (Category 3)], the surrounding housing must meet at least IP 54.

The standards and guidelines applicable for the assembly of switch cabinets and the arrangement of data and supply lines must be complied with.

2.1.3 Fusing

The operator must set up the equipment so that it is protected against overloading. The upstream fuse must be designed such that it does not exceed the maximum load current. The maximum permissible load current of the RSTi-EP components can be found in the technical data.

In the case of modules without fused sensor/actuator power supplies, all lines to the connected sensors/actuators must be fused corresponding to their conductor cross-section (as per DIN VDE 0298 Part 4).

To meet UL-specifications in accordance with UL 248-14, a UL-certified automatic fuse or a 10 A fuse with a medium time-lag must be used.

All connections of the RSTi-EP components are protected against voltage pulses and overcurrent in accordance with IEC 61131-2, Zone B. The operator must decide whether additional overvoltage protection according to IEC 62305 is required. Voltages that exceed +/-30 V may cause the destruction of network adapters and modules.

A feed-in power supply with secure isolation must be used.

2.1.4 Earthing (functional earth FE)

Each RSTi-EP I/O module is fitted with an FE spring on the underside which creates an electrical connection to the DIN rail. In order to establish a secure connection, the assembly must be carried out carefully in accordance with the instructions (refer to Section 6, Installation). The module is earthed by connecting the DIN rail to the protective earth via the earth terminal.

Modules EP-700F, EP-1214, EP-2214, EP-3124 and EP-3164 have connections with green pushers. An FE potential is also provided at these connections. They must not be used as a PE.

2.1.5 Shielding

Shielded lines are to be connected with shielded plugs and fixed on a shield bus in compliance with the relevant standard (refer to Section 7, Earthing and Shielding).

2.1.6 Overcurrent

Potentials of network adapters and power-feed modules must be disconnected either simultaneously or in the order 24 V supply first, then the GND potential.

2.2 Intended Use

The products of the RSTi-EP series are intended for use in industrial automation. A RSTi-EP station with network adapter and connected modules is intended for the decentralized control of systems or sub-systems. Via the network adapter every module of a station is integrated into a fieldbus structure and connected to the primary control unit. The RSTi-EP products conform to protection class IP 20 (in accordance with DIN EN 60529), they can be used in potentially explosive atmospheres rated as Zone 2 (as per Directive 2014/34/EU) and in safe zones.

The observance of the supplied documentation is part of the intended use. The products described in this manual may only be used for the intended applications and only in connection with certified third-party devices or components.

2.3 Use in a Potentially Explosive Atmosphere

If RSTi-EP products are used in potentially explosive atmospheres, the following notes are also applicable:

- Staff involved in assembly, installation and operation must be qualified to perform safe work on electrical systems protected against potentially explosive atmospheres.
- The remote I/O-System RSTi-EP shall only be used in an area of not more than pollution degree 2, as defined in IEC 60664-1.
- For applications in potentially explosive atmospheres, the requirements according to IEC 60079-15 must be observed, the housing enclosing the system must meet the requirements of explosion protection type Ex n or Ex e and protection class IP54. The IP54 enclosure must be accessible only by use of a tool.
- Sensors and actuators that are located in Zone 2 or in a safe zone can be connected to the RSTi-EP station.
- The ambient temperature range -20°C to +60°C shall not be exceeded.
- When the temperature under rated conditions exceeds 70 °C at the conductor or conduit entry point, or 80 °C at the contact, the temperature specification of the selected cable shall follow the actual measured temperature values.
- A stabilized 24Vdc power supply with double or reinforced insulation shall be used.

- When using modules EP-2714, EP-2814, and EP-1804 in explosive atmosphere:
  - Device shall be installed in an environment free of condensation, corrosives and conducting dusts.
  - If the switching or input voltage exceeds 63V, a transient protection device shall be provided that, limits the transients to a peak voltage of 500V or less.
- For EP-2714 (Relay Module) only:
  - Since relays are subject to wear, it must be ensured, by appropriate maintenance intervals, that the temperatures do not exceed the limits of temperature class T4.

    Note: *A contact resistance of more than 110 mΩ will be considered as a fault.*
  - Resistive Loads Only
- For EP-2714 and EP-2814 Relay Modules:
  - Transient protection shall be provided that is set at a level not exceeding 140% of the peak rated voltage value at the supply terminals to the equipment.
- A visual inspection of the RSTi-EP station is to be performed once per year.
- If mounted in other directions than horizontal (reference mounting rail), restrictions to the max. operating temperature, max. output currents may apply.
- While explosive atmosphere is present:
  - No electrical connection shall be separated in energized condition.
  - The USB interface shall not be used.
  - Dip-switches, binary-switches and potentiometers shall not be actuated.
- Only power supplies with secure isolation shall be used.
- Refer manufacturers manual.

⚠ WARNING

⚠ EXPLOSION HAZARD - –UBSTITUTION OF COMPONENTS MAY IMPAIR SUITABILITY FOR CLASS I, DIVISION 2.

- WHEN IN HAZARDOUS LOCATIONS, TURN OFF POWER BEFORE REPLACING OR WIRING MODULES; AND
- DO NOT CONNECT OR DISCONNECT EQUIPMENT UNLESS POWER HAS BEEN SWITCHED OFF OR THE AREA IS KNOWN TO BE NONHAZARDOUS.

2.3.1 ATEX Zone 2

The modules must be mounted in an enclosure certified in accordance with EN60079-15 for use in Zone 2, Group IIC and rated IP54. The enclosure shall only be able to be opened with the use of a tool.

2.3.2 ATEX & IECEx Marking

Ⓔx II 3 G Ex nA IIC T4 Gc, DEMKO 16 ATEX 1591X
Ex nA IIC T4 Gc, IECEx ULD 16.0022X Ta: -20 °C to +60 °C

For Relay Modules:

Ⓔx II 3 G Ex nA nC IIC T4 Gc, DEMKO 16 ATEX 1591X

Ex nA nC IIC T4 Gc, IECEx ULD 16.0022X

Ta: -20 °C to +60 °C

Note: There is no ATEX conformity for the EP-1813 Power Measurement module.

2.4 Legal Notice

The modules must be mounted in an enclosure certified in accordance with EN60079-15 for use in Zone 2, Group IIC and rated IP54. The enclosure shall only be able to be opened with the use of a tool.

2.5 Use of RSTi-EP Stations 2,000m above Sea Level

The RSTi-EP remote I/O system can operate in height >2,000 m (6,561.68 ft) above sea level, with the following limitations:

There is a derating for ambient temperatures while the RSTi-EP Station is in operating mode. Refer to the following derating table.

Altitude (m, ft)	Factor for Temperature Derating
< 2,000 m (6,561.68 ft)	1
2,001 to 3,000 m (6,564.96 to 9,842.52 ft)	0.88
3,001 to 4,000 m (9,845.80 to 13,123.36 ft)	0.78
4,001 to 5,000 m (13,126.64 to 16,404.20 ft)	0.68

2.5.1 Example:

Height 3,000 m (9,842.52 ft):

maximum operational temperature is 60° C (140 °F) x 0.88 = **52.8°C (136.76 °F)** at maximum 8A.

Section 3: Configuration

3.1 Order and Arrangement of Modules

The RSTi-EP system elements are designed to be installed on a profile rail according to EN 60715 [1.4 x 0.26 in (35 × 7.5 mm)], a steel strip in accordance with Annex A of EN 60715, or a tin-plated steel strip.

Note: A RSTi-EP station may be built up to a maximum length of 3.28 ft (1 m). Therefore, at most 82 modules (including max. 64 active modules) can be aligned on a network adapter.

The RSTi-EP station is usually installed on a horizontally positioned DIN rail.

Figure 9: Installation Position of the RSTi-EP Station on the DIN Rail (Horizontal Installation)

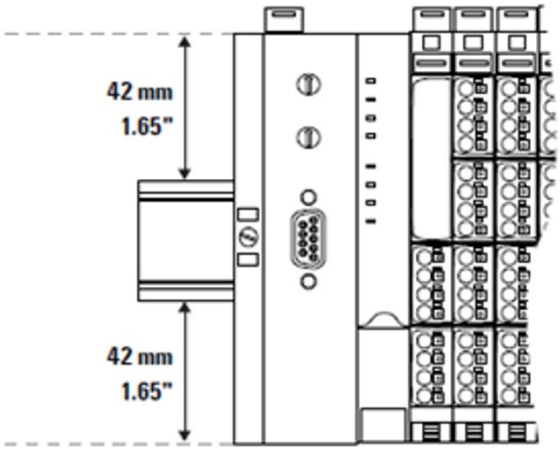

Installation on vertically positioned DIN rails is also possible. In this case however, the heat dissipation is reduced such that the derating values change (refer to Section 3.5, Current Demand and Power Supply). In the case of vertical mounting, the network adapter must always be arranged as the first module at the bottom and secured with an end bracket for vertical mounting.

Figure 10: Installation Position of the RSTI-EP Station on the DIN Rail (Vertical Installation)

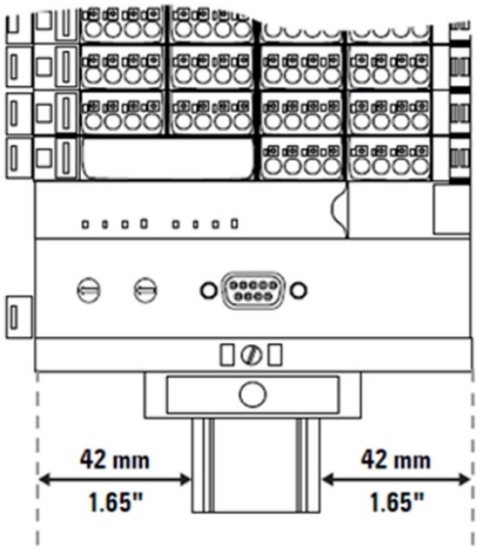

A RSTi-EP station may only be installed in this sequence (starting from the left/bottom):

- End bracket
- Network adapter
- Up to 82 modules (including max. 64 active modules)
- End plate and end bracket

Attention

A maximum of three passive modules (potential distribution module, power-feed module or blank module) may be placed in successive positions. Then at least one active module must follow.

3.1.1 Arrangement of Safe Power-Feed Modules

A safe power-feed module EP-19xx module can be positioned anywhere in the RSTi-EP station. All the following output modules (except for the EP-2814 and EP-2714 relay modules) up to the next EP-19xx module are safely disconnected (safety segment). Multiple EP-19xx modules/safety segments can be arranged within a station.

Note: *When using RSTi-EP EP-19xx modules, also refer to the Modules for Functional Safety Manual (GFK-2956).*

3.1.2 Power Supply Concept

The RSTi-EP system uses three internal current paths as described in the following chapter, Detailed Descriptions of the Fieldbus Network Adapters. Input and output paths are

supplied separately, therefore a custom-fit refreshing by power-feed modules is easily feasible.

Figure 11 shows the general supply concept. For detailed description and calculation of the current demand refer to Section 3.6, Example Calculation for the Power Supply and Section 3.7.1, Calculation of Power Loss.

Figure 11: RSTi-EP Power Supply Overview

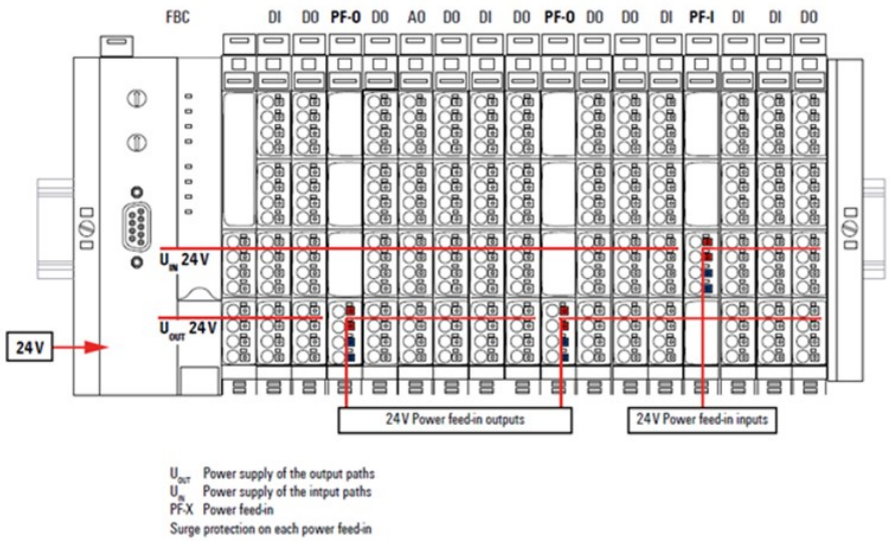

3.2 Clearances

In order to be able to carry out the installation and subsequent maintenance work and to ensure enough ventilation, the RSTi-EP station must be installed while observing the following Clearances (refer to the following figures).

Attention

Depending on how the station shielding is implemented, the specified distances may have to be made larger, where necessary.

The minimum permissible conductor bending radii must also be observed. Earth terminals already installed can be ignored when calculating the distance.

Figure 12: Clearances for Horizontal Installation

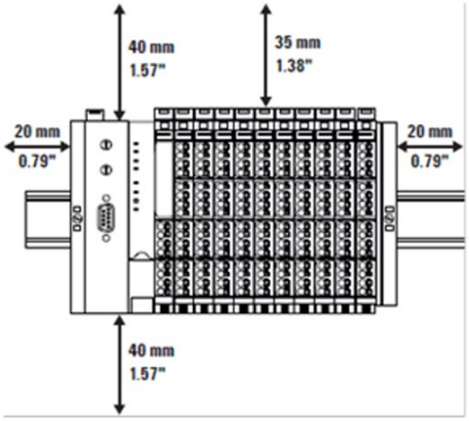

Figure 13: Clearances for Vertical Installation

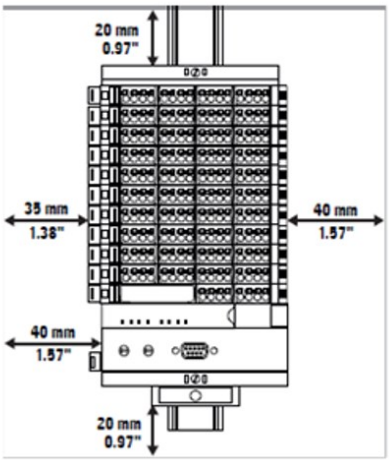

Figure 14: Clearances for Electrical Cabinet Door (Without/With Swivel Marker)

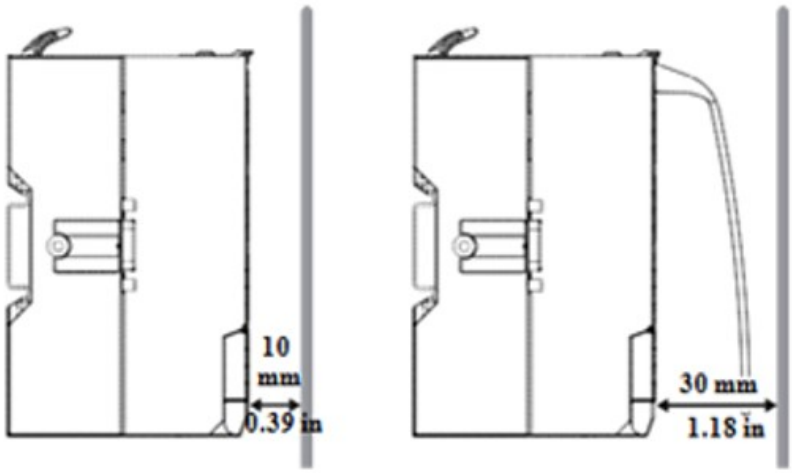

3.2.1 Calculation of Space Requirements

The space requirements for a RSTi-EP station with n modules (**horizontal installation**) is calculated as follows:

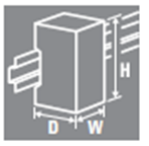		
Height:	120 mm (4.72 in) + 40 mm (2 x 1.57 in) **= 200 mm (7.87 in)**	clearance at top and bottom
Width:	8 mm (1.57 in) + 52 mm (2.05 in) + n x 11.5 mm (0.45 in) + 11.5 mm (0.45 in) + 2 x 20 mm (0.79 in) **= 111.5 mm (4.39 in) + n x 11.5 mm (0.45 in)**	end bracket network adapter n modules end plate and end bracket distances to the sides

For vertical installation interchange height and width. When calculating the width, 4.5 mm (0.18 in) for the must be added for the end bracket.

3.3 Use in a Potentially Explosive Atmosphere

If the RSTi-EP is used in a potentially explosive atmosphere rated as Zone 2, the housing must meet the requirements of explosion protection type Ex n or Ex e and protection class IP54. Sensors and actuators that are in Zone 2 or in a safe zone can be connected. All cable glands on the housing must be approved for Ex e.

Figure 15: Use in a Potentially Explosive Atmosphere

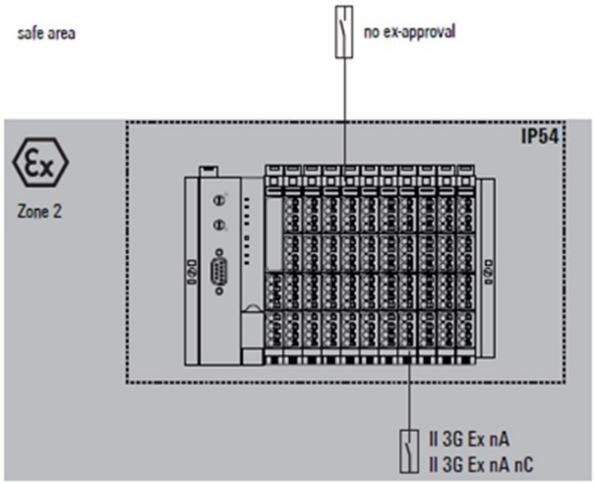

3.3.1 ATEX & IECEx Marking

Ⓔx II 3 G Ex nA IIC T4 Gc, DEMKO 16 ATEX 1591X

Ex nA IIC T4 Gc, IECEx ULD 16.0022X

Ta: -20 °C to +60 °C

For Relay Modules:

Ⓔx II 3 G Ex nA nC IIC T4 Gc, DEMKO 16 ATEX 1591X

Ex nA nC IIC T4 Gc, IECEx ULD 16.0022X

Ta: -20 °C to +60 °C

Note: There is no ATEX conformity for the EP-1813 Power Measurement module.

3.4 Spring-Style System Cabling

RSTi-EP modules (except HD modules) and network adapters are equipped with the spring-style connector system. Single-strand and fine-strand lines with wire-end ferrules can be inserted without the need for a tool. Lines with a cross-section measuring between 0.14 mm2 and 1.5 mm2 (AWG 26 – 16) can be connected.

The external dimensions of the crimped wire-end ferrules must conform to IEC-60947-1.

3.5 Current Demand and Power Supply

The RSTi-EP system uses three internal current paths:

The **ISYS system current path** supplies the communication part of the I/O modules; it is fed from the network adapter input supply and cannot be interrupted by any module. The maximum current-carrying capacity of ISYS allows a RSTi-EP station to be expanded with a maximum of 64 active modules without having to refresh the power.

The **IIN input current path** supplies the input circuit of the input modules as well as the connected IS sensors. The current must be refreshed with EO-7631 (power feed in) modules as required. These EP-7631 modules isolate the input current path towards the left (towards the network adapter), and as a result start a new electricity segment towards the right.

The **IOUT output current path** supplies the output circuit of the output modules with power, as well as the connected IL actuators. The current must be refreshed with the EP-7641 (power feed-out), as required. These EP-7641 modules isolate the output current path to the left (towards the network adapter), and as a result start a new electricity segment to the right.

Note: The design of the power supply being used must take start-up peaks into account.

3.5.1 Power Supply Derating

The power supply is restricted according to the temperature. The following values apply for the horizontal and vertical positioning of the RSTi-EP station:

Temperature-dependent Values for the Power Supply

Power Source	Horizontal	Vertical
Network Adapter power supply	60 °C / 140 °F: 2 x 8 A 55 °C / 131 °F: 2 x 10 A	55 °C / 131 °F: 2 x 6 A 50 °C / 122 °F: 2 x 8 A
Power-feed module power supply	60 °C / 140 °F: 1 x 10 A	55 °C / 131 °F: 1 x 8 A

Current Demand

Product group	Product	I_{SYS}	I_{IN}	I_{OUT}	I_S	I_L
Network adapters	EPXPBS001	100 mA				
	EPXPNS001	116 mA				
	EPXPNS101	116 mA				
	EPXETC001	110 mA				
	EPXMBE001	112 mA				
	EPXMBE101	112 mA				
	EPXEIP001	112 mA				
Digital input modules	EP-1214	8 mA	18 mA		x	
	EP-1218	8 mA	30 mA		x	
	EP-1318	8 mA	30 mA		x	
	EP-125F	8 mA	52 mA			
	EP-12F4	8 mA	18 mA		x	
	EP-1804	8 mA				
	EP-153F	8 mA	52 mA		x	
Digital output modules	EP-2214, EP-2714, EP-2634	8 mA		20 mA		x
	EP-2218	8 mA		35 mA		x
	EP-225F, EP-2614	8 mA		25 mA		x
	EP-2814	11 mA				
	EP-291F	8mA		30mA		x
Analog input modules	EP-3164, EP-3124, EP-3264	8 mA	25 mA		x	
	EP-3664	8 mA	31 mA +Load			
	EP-3804, EP-3704, EP-3368, EP-3468	8 mA	20 mA			
	EP-1813	8 mA	≤ 40 mA			
Analog output modules	EP-4164, EP-4264	8 mA		85 mA		
Functional modules	EP-5111, EP-5112	8 mA	35 mA			x
	EP-5212	8 mA	35 mA		x	x

Product group	Product	I_{SYS}	I_{IN}	I_{OUT}	I_S	I_L
	EP-5422, EP-5442	8 mA		40 mA		
	EP-5261	8 mA	16 mA			
	EP-5311	8 mA	25 mA			
	EP-5324	8 mA	25 mA		x	
Power-feed modules	EP-7641			10 mA		
	EP-7631		10 mA			
	EP-1901, EP-1902, EP-1922	8 mA	45 mA			x
Potential distribution modules	EP-751F	-	-	-	-	-
	EP-711F	-	-	-	-	-
I_{SYS} I_{IN} I_{OUT} I_S I_L x	Current consumption from the system current path Power consumption from input current path Power consumption from output current path Current demand of the connected sensors Current demand of the connected actuators Must be included when calculating the power supply					

3.6 Example Calculation for the Power Supply

The power supply must be calculated individually for each station installation. Therefore, the simultaneity factor g and the current demand of each module, as well as the devices to be connected must be established (refer to the example calculation table).

In the **example station**, an EPXPNS001 network adapter is configured with four EP-1214 modules and eight EP-2218 modules. The cumulative current demand for each module is now calculated to determine whether and at which point a EP-7631 power-feed module must be positioned to refresh the current path. A power-feed module must always be used where the current demand exceeds 10 A.

Note: *The power refresh must be separately calculated for the input and output current paths. The system voltage need not be considered during this step.*

Use the RSTi-EP Power Supply Configuration Guide to perform this calculation automatically.

Calculation of the Current Demand for the Input Current

The current consumption of the network adapter must be considered for the **main power supply**, and the sum of consumption values is multiplied by the simultaneity factor g for each following module:

I_{SYS} network adapter + (I_{SYS} + I_{IN}) + (I_S x g) module 1 + (I_{SYS} + I_{IN}) + (I_S x g) module 2 + Σ ((I_{SYS} + I_{IN}) + (I_S x g)) modules 3 to 4 **= Cumulative current demand**	I_{SYS} Current consumption from the system current path I_{IN} Current consumption from the input current path I_S Power supplies for the connected sensors

In the case of an additional power supply (power refresh) with a EP-7631 power-feed module, only the sensor power supplies and the module current consumption have to be considered:

$((I_{IN} + I_S \text{ module x}) \times g)$ $+ ((I_{IN} + I_S \text{ module y}) \times g)$ $+ \Sigma ((I_{IN} + I_S) \times g)$ n modules **= Cumulative current demand**	I_{SYS} Current consumption from the system current path I_S Power supplies for the connected sensors

Calculation of the Current Demand for the Output Current

The current consumption of each module and the current demand of the connected actuators must be considered for the output current. There is no difference in the calculation of the main power supply and power refresh:

$(I_{OUT} + (I_L \times g)$ module 1 $+ (I_{OUT} + (I_L \times g)$ module 2 $+ \Sigma (I_{OUT} + (I_L \times g))$ n modules **= Cumulative current demand**	I_{OUT} module current consumption from the output current path I_L Current demand of the connected actuators

Example:

The values in the following table are used to calculate the current demand of the example station (cumulative for each module). The input current is:

Module 1:

I = 0.116 A + (0.008 A + 0.012 A) + (0.06 A x 1) = 0.196 A

Module 2:

I = 0.196 A + (0.008 A + 0.012 A) + (0.06 A x 1) = 0.276 A

The values for the other modules are calculated accordingly. The result shows that the accumulated value for up to 12 modules remains under 10 A, and therefore a power supply module need not be used for the input current path. Results for the output current path:

Module 5:

I = 0.015 A + (0.5 A x 2) = 1.015 A

Module 6:

I = 1.015 A + (0.015 A + (0.5 A x 4) = 3.03 A

Module 10:

I = 6.175 A + (0.015 A + (0.5 A x 4) = 8.19 A

Module 11 (without power refresh):

I = 8.19 A + (0.015 A + (0.5 A x 4) = **10.205 A**

Therefore, the available 10 A would be exceeded. As a result, an EP-7641 power supply module must be positioned as the 11th module, which will supply the required power to the subsequent modules after the power feed module. Unused current values may not be included.

Module 11 (as per PF-O):

I = (0.015 A + (0.5 A x 4) = 2.015 A

Module 12 (as per PF-O):

I = 2.015 A (0.015 A + (0.5 A x 4) = 4.030 A

3.7 Example Calculation for the Current Demand (all Current Values in Amps)

Module no.	Part number	I_{SYS}	I_{IN}	I_{OUT}	I_S	I_L	Simultaneity factor g	Cumulative current demands of the input current path	Cumulative current demand of the output power path network adapter	Cumulative current demand of the EP-7641 output power path
	EPXPNS001	0.116						0.116	0	
1	EP-1214	0.008	0.018		0.06		1.0	0.202	0	
2	EP-1214	0.008	0.018		0.06		1.0	0.288	0	
3	EP-1214	0.008	0.018		0.12		1.0	0.434	0	
4	EP-1214	0.008	0.018		0.18		1.0	0.640	0	
5	EP-2218	0.008		0.035		2.0	0.5	0.648	1.035	
6	EP-2218	0.008		0.035		4.0	0.5	0.656	3.070	
7	EP-2218	0.008		0.035		3.0	0.5	0.664	4.605	
8	EP-2218	0.008		0.035		2.0	0.5	0.672	5.640	
9	EP-2218	0.008		0.035		1.2	0.5	0.680	6.275	
10	EP-2218	0.008		0.035		4.0	0.5	0.688	8.290	
	EP-7641									
11	EP-2218	0.008		0.035		4.0	0.5	0.696		2.035
12	EP-2218	0.008		0.035		4.0	0.5	0.700		4.070
I_{SYS} I_{IN}	Current consumption from the system power supply Power consumption from input current path									

Module no.	Part number	I_{SYS}	I_{IN}	I_{OUT}	I_S	I_L	Simultaneity factor g	Cumulative current demands of the input current path	Cumulative current demand of the output power path network adapter	Cumulative current demand of the EP-7641 output power path
I_{OUT} I_S I_L	Power consumption from output current path Current demand of the connected sensors Current demand of the connected actuators									
	The current demand is just under 10 A. The output current path must therefore be refreshed **before the 11th module.**									
	10 A is supplied by the EP-7641 module. The 1.81 A calculated as remaining after the 10th module must **not** be added to the 10 A after the EP-7641 module!									

3.7.1 Calculation of Power Loss

The power loss of the network adapter is calculated as follows:

Pnetwork adapter = P0 + N * Pmod + Iin * Δuin + Iout * Δuout

P_0	Static power loss in the network adapter	2.3 W
N	Number of modules	
P_{mod}	Power loss due to module supply from the system current path	0.02 W
P_{module}	Maximum power loss module	
I_{in}	Current fed in through the input current path	
ΔV_{in}	Voltage drop across the contacts in the input current path	0.18 V
I_{out}	Current fed in through the output current path	
ΔV_{out}	Voltage drop across the contacts in the output current path	0.18 V

The power loss of a RSTi-EP station is calculated using the power loss of the network adapter and the power loss of the individual modules. It depends on the current in both current paths. It is assumed that there is a maximum power loss of 2 watts for the module

Maximum values were assumed for these calculations. If you need detailed calculations, please contact Emerson technical support or Global Care https://www.emerson.com/Industrial-Automation-Controls/support.

$P_{station} = P_{network\ adapter} + N * P_{module}$

3.7.2 Calculation of Power Loss for Use in a Potentially Explosive Atmosphere

The module specific data, needed to calculate the output power loss, is provided in the ATEX certificate which you can download from https://www.emerson.com/Industrial-Automation-Controls/support.

3.8 Feedback Energy in DO Modules

With digital output modules, power is fed back through the channels when inductive loads are switched off. The respective permissible breaking energy is *noted* in the technical data of the DO modules. Depending on the switching frequency, the breaking energy leads to additional energy loss in the output module.

If the maximum permissible feedback energy for a module is exceeded, the module shuts down temporarily.

Note: *Feedback energy can be prevented by installing external freewheeling protection. With it, the same switching rate can be achieved with an inductive load as with a resistive load.*

3.8.1 Calculation of Feedback Energy

The feedback energy for a digital output module can be calculated as follows:

P = Σall channels ½ ni * Li * Ii²

where

P	=	Feedback energy of the module
n_i	=	Switching cycles of Channel i in 1/seconds
E_i	=	Feedback energy when shutting off Channel i during a shutdown procedure
I_i	=	Current through the load connected to Channel i
L_i	=	Inductance of the load connected to Channel i

Once the maximum permissible feedback energy E_{max} is reached, the module shuts down.

Figure 16: Maximum Feedback Energy Varies with Ambient Temperature

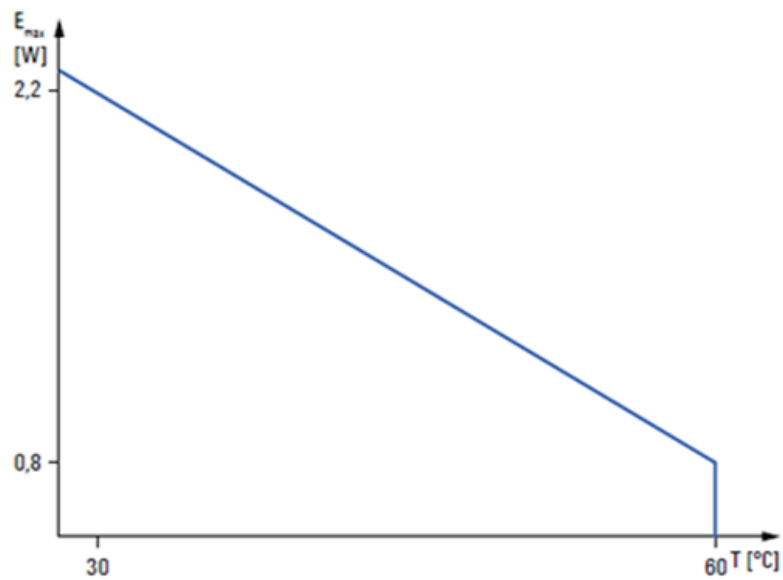

3.9 Parameter Overview

3.9.1 Modifiable Parameters for Network Adaptors

Product	Part No.	Parameter	Optional values	Default value
PROFIBUS DP-V1 Network Adapter	EPXPBS001	DP-Alarm mode	V0 / V1	V1
		DP alarm mode V0	**For mode V0, the alarm triggers are set in the parameter data.**	
		Diagnostic alarm†	enabled / disabled	disabled
		Process alarm†	enabled / disabled	disabled
		Hot-plug alarm†	enabled / disabled	enabled
		† These switches are always selectable, but they only have a function in mode V0. Diagnostic messages are generated which are not acknowledged by the PLC.		
		DP alarm mode V1	**In mode V1, the alarm triggers are set in the engineering environment.**	
		Diagnostic alarm††	enabled / disabled	disabled
		Process alarm††	enabled / disabled	disabled
		Hot-plug alarm††	enabled / disabled	enabled
		†† These switches can be selected only in mode V1, in V0 they are inactive. Diagnostic messages are generated which are acknowledged by the PLC.		
		Identifier-related diagnosis†††	enabled / disabled	enabled
		Channel-related diagnosis†††	enabled / disabled	enabled
		Module status†††	enabled / disabled	enabled
		††† A diagnostic block is attached to the diagnostic message.		
		Data format	Motorola / Intel	Motorola
		Fieldbus error output behavior	All outputs off / activate replacement values/ retain last value	All outputs off
		Module behavior during hot swap	Continue data exchange / behavior as with fieldbus error	Continue data exchange

Product	Part No.	Parameter	Optional values	Default value
ROFINET IRT Network Adapter, 2 Cu RJ45 Ports, 1024 bytes (Input + Output)	EPXPNS001 /EPXPNS101	Redundancy Mode (Only **EPXPNS101**)	None / HSB CPU Redundancy	None
		Process alarm	enabled / disabled	disabled
		Diagnostic alarm	enabled / disabled	disabled
		Type of diagnostic	diagnostic (short diagnostic) Manufacturer-specific diagnostic (complete diagnostic)	Extended channel diagnostic (short diagnostic)
		Behavior of outputs on fieldbus errors	All outputs off / Enable substitute value / Hold last value	All outputs off
		Module behavior on hot swap	Continue data exchange / Behavior like fieldbus error	Continue data exchange
		Data format	Motorola / Intel	Motorola
		Webserver via Ethernet	enabled / disabled	disabled
		Option Handling[1]	enabled / disabled	disabled
		Group Module Diagnostic Alarm[1]	enabled / disabled	disabled
		Reduce Return of Submodule Alarm[1]	enabled / disabled	disabled
EtherCAT Network Adapter, 2 Cu RJ45 Ports, 1024 bytes (Input + Output)	EPXETC001	Process alarm	enabled / disabled	disabled
		Diagnostic alarm	enabled / disabled	disabled
		Behavior of outputs on fieldbus errors	All outputs off / Enable substitute value / Hold last value	All outputs off
		Module behavior on hot swap	Continue data exchange / Behavior like fieldbus error	Continue data exchange
		Data format	Motorola / Intel	Intel
		Webserver via Ethernet	enabled / disabled	enabled
		Network adapter control	Reserved	Off

[1] These new features were added in revisions EPXPNS001-ABAE & EPXPNS101-AAAA.

Product	Part No.	Parameter	Optional values	Default value
Modbus TCP Network Adapter, 2 Cu RJ45 Ports,2048 bytes (Input + Output)	EPXMBE001 /EPXMBE101	IP-Address# # In Dual LAN Mode (**EPXMBE101** only) parameterizable for each Ethernet Port	4 numbers between 0-255	192.168.0.222
		Subnet mask# # In Dual LAN Mode (**EPXMBE101** only) parameterizable for each Ethernet Port	4 numbers between 0-255	255.255.255.0
		Gateway# # In Dual LAN Mode (**EPXMBE101** only) parameterizable for each Ethernet Port	4 numbers between 0-255	192.168.0.1
		IP Configuration# # In Dual LAN Mode (**EPXMBE101** only) parameterizable for each Ethernet Port	Static, DHCP, BootP Firmware 02.00.00 and higher: additionally DHCP and static	Static (firmware 01.xx.xx) DHCP and static (firmware 02.00.00 or higher)
		Modbus Dual LAN Mode (**EPXMBE101** only)	disabled / enabled	disabled
		Modbus DHCP Timeout	Waiting time, 1 to 1,000 s	30 s
		IP-Address USB-Port	192.168.1.202; 192.168.2.202, 192.168.3.202, 192.168.4.202, 192.168.5.202	192.168.1.202
		Webserver via Ethernet	disabled / enabled	enabled
		Save module parameters	no / yes / Standard	no, see register 0x113C-0x113F
		Status Modbus watchdog	Watchdog time in steps of 10ms	0 *10ms, see register 0x1120
		Modbus Connection Timeout	Connection watchdog time in sec	1 s, see register 0x1131
		Writing access with multiclient	write for all, 1stWr1stServe, 1stConn1stServe	write for all, see register 0x1130
		Check reference list before exchanging data	disabled / enabled	disabled, see register 0x1132
		Process alarm	disabled / enabled	disabled, see register 0x1133
		Diagnostic alarm	disabled / enabled	disabled, see register 0x1134
		Behavior of outputs on fieldbus error	All outputs off / Enable substitute values / Hold last value	All outputs off, see register 0x1135

Product	Part No.	Parameter	Optional values	Default value
		Module behavior on hot swap	Continue data exchange / Behavior like fieldbus error	Continue data exchange, see register 0x1136
		Data format	Motorola / Intel	Motorola, see fieldbus register 0x1137
EtherNet/IP Network Adapter, 2 Cu RJ45 Ports	EPXEIP001	IP-Address	4 numbers between 0-255	0.0.0.0
		Subnet mask	4 numbers between 0-255	255.255.255.0
		Gateway	4 numbers between 0-255	0.0.0.0
		IP Configuration	Static, DHCP, BootP	DHCP
		IP-Address USB Port	192.168.1.202; 192.168.2.202, 192.168.3.202, 192.168.4.202, 192.168.5.202	192.168.5.202
		Webserver via Ethernet	disabled / enabled	enabled
		Save module parameters	no / yes / Standard	no
		Output Behavior on idle state	All outputs off (0) / Enable substitute values (1) / Hold last value (2)	All outputs off
		Process alarm	disabled (0) / enabled (1)	disabled
		Diagnostic alarm	Disabled (0) / enabled (1)	disabled
		Behavior of outputs on fieldbus error	All outputs off (0) / Enable substitute values (1) / Hold last value (2)	All outputs off
		Module behavior on hot swap	Continue data exchange (0) / Behavior like fieldbus error (1)	Continue data exchange
		Data format	Motorola (0) / Intel (1)	Intel
		Lock force mode	Force mode unlocked / Force mode locked	Force mode unlocked
		HTTPS setting	HTTP & HTTPS concurrent operation/ Only HTTPS; no HTTP	Only HTTPS; no HTTP
Digital Input, 4 Points, Positive Logic 24Vdc, 2-, 3-, or 4-Wire	EP-1214	Ch 0 ... Ch 3: Input delay	no (0)/ 0.3ms (1) (not at PROFIBUS-DP)/ 3ms (2)/ 10ms (3)/ 20ms (4)/ 40ms (5) (not at PROFIBUS-DP)	3ms
Digital Input, 8 Points, Positive Logic, 24Vdc 2-Wire	EP-1218	Ch 0 ... Ch 7: Input delay	no (0) / 0.3ms (1) (not at PROFIBUS-DP) / 3ms (2) / 10ms (3) / 20ms (4) / 40ms (5) (not at PROFIBUS-DP)	3ms
Digital Input, 8 Points, Positive Logic, 24Vdc 3-Wire	EP-1318			

Product	Part No.	Parameter	Optional values	Default value
Digital Input, 4 Points, Positive Logic 24Vdc, 2-, 3-, or 4-Wire, Time stamp	EP-12F4	Ch 0 ... Ch 3: Input delay	no (0) / 0.3ms (1) (not at PROFIBUS-DP) / 3ms (2) / 10ms (3) / 20ms (4) / 40ms (5) (not at PROFIBUS-DP)	3ms
		Ch 0 ... Ch 3: Timestamp at edge 0-1	disabled (0) / enabled (1)	disabled
		Ch 0 ... Ch 3: Timestamp at edge 1-0	disabled (0) / enabled (1)	disabled
Digital Output, 4 Points, Positive Logic 24Vdc, 0.5A, 2-, 3-, or 4-Wire	EP-2214	Ch 0 ... Ch 3: Substitute value	Off (0) / On (1)	Off
Digital Output, 4 Points, Positive Logic 24Vdc, 2.0A, 2-, 3-, or 4-Wire	EP-2614			
Digital Output, 4 Points, Positive/ Negative Logic 24Vdc, 2.0A, 2-, 3-, or 4-Wire	EP-2634	Ch 0 ... Ch 3: Substitute value OP-Mode	Sinking (0) / Sourcing (1)	Sourcing
		Ch 0 ... Ch 3: Substitute value	Off (0) / On (1)	Off
Digital Output, 8 Points, Positive Logic, 24Vdc, 0.5A, 2-Wire	EP-2218	Ch 0 ... Ch 7: Substitute value	Off (0) / On (1)	Off
Digital Output, 4 Points, Positive Logic, 230Vac, 1A	EP-2814	Ch 0 ... Ch 3: Substitute value	Off (0) / On (1)	Off
Digital Relay Output, 4 Points, Positive Logic, 24 – 220 Vdc/Vac, 6A, 2-Wire	EP-2714			

Product	Part No.	Parameter	Optional values	Default value
1 Channel High Speed Counter, AB 100 kHz 1 DO 24Vdc, 0.5A	EP-5111	Diagnostic alarm	disabled (0) / enabled (1)	disabled
		Ch 0: Filter time signal A	0.01ms [100 kHz] (0) / 0.017ms [50 kHz] (1) / 0.033ms [30 kHz] (2) / 0.1ms [10 kHz] (3) / 0.2ms [5 kHz] (4) / 0.5ms [2 kHz] (5) / 1ms [1 kHz] (6)	0.01ms
		Ch 0: Filter time signal B	0.01ms [100 kHz] (0) / 0.017ms [50 kHz] (1) / 0.033ms [30 kHz] (2)/ 0.1ms [10 kHz] (3) / 0.2ms [5 kHz] (4)/ 0.5ms [2 kHz] (5) / 1ms [1 kHz] (6)	0.01ms
		Ch 0: Filter time latch	0.01ms (0) / 0.017ms (1) / 0.033ms (2) / 0.1ms (3) / 0.2ms (4) / 0.5ms (5) / 1ms (6)	0.01ms
		Ch 0: Filter time gate	0.01ms (0) / 0.017ms (1) / 0.033ms (2) / 0.1ms (3) / 0.2ms (4) / 0.5ms (5)/ 1ms (6)	0.01ms
		Ch 0: Filter time reset	0.01ms (0) / 0.017ms (1) / 0.033ms (2) / 0.1ms (3) / 0.2ms (4) / 0.5ms (5) / 1ms (6)	0.01ms
		Ch 0: Process alarm HW gate open	disabled (0) / enabled (1)	disabled
		Ch 0: Process alarm HW gate closed	disabled (0) / enabled (1)	disabled
		Ch 0: Process alarm overflow	disabled (0) / enabled (1)	disabled
		Ch 0: Process alarm underflow	disabled (0) / enabled (1)	disabled
		Ch 0: Process alarm comp. value	disabled (0) / enabled (1)	disabled
		Ch 0: Process alarm end value	disabled (0) / enabled (1)	disabled
		Ch 0: Process alarm latch value	disabled (0) / enabled (1)	disabled

Product	Part No.	Parameter	Optional values	Default value
		Ch 0: Counting mode	count endless (0) / once forward (1) / once backwards (2) once – no main direction (3) / periodic forward (4)/ periodic backwards (5)/ periodic – no main direction (6)	count endless
		Ch 0: Condition for DO	disabled (0) / higher equal comparison value (1) / lower equal comparison value (2)/ equal comp value (3)	disabled
		Ch 0: Counter dir. Signal B inv.	Disabled (0) / enabled (1)	disabled
		Ch 0: Reset	disabled (0) / high level (1) / rising edge 0-1 (2)/ rising edge once 0-1 (3)	disabled
		Ch 0: Signal mode	Rotary transducer – single (0) / Rotary transducer – double (1) / Rotary transducer – quadruple (2) / Pulse and Direction (3)/ disabled (4)	disabled
		Ch 0: HW gate	disabled (0) / enabled (1)	disabled
		Ch 0: Counter behavior internal gate	Interrupt counting (0) / Cancel counting (1)	interrupt counting
		Ch 0: End value	-2147483648 2147483647	2147483647
		Ch 0: Load value	-2147483648 2147483647	0
		Ch 0: Hysteresis	0 ... 255	0
		Ch 0: Pulse duration	0 ... 255 [Input value x 2 = output time; corresponds to 0 510ms]	0

Product	Part No.	Parameter	Optional values	Default value
2 Channel High Speed Counter, AB 100 kHz	EP-5112	Diagnostic alarm	disabled (0) / enabled (1)	disabled
		Ch 0 ... Ch 1: Filter time signal A	0.01ms [100 kHz] (0) / 0.017ms [50 kHz] (1) / 0.033ms [30 kHz] (2) / 0.1ms [10 kHz] (3) / 0.2ms [5 kHz] (4) / 0.5ms [2 kHz] (5) / 1ms [1 kHz] (6)	0.01ms
		Ch 0 ... Ch 1: Filter time signal B	0.01ms [100 kHz] (0) / 0.017ms [50 kHz] (1) / 0.033ms [30 kHz] (2) / 0.1ms [10 kHz] (3) / 0.2ms [5 kHz] (4) / 0.5ms [2 kHz] (5) / 1ms [1 kHz] (6)	0.01ms
		Ch 0 ... Ch 1: Process alarm overflow	disabled (0) / enabled (1)	disabled
		Ch 0 ... Ch 1: Process alarm underflow	disabled (0) / enabled (1)	disabled
		Ch 0 ... Ch 1: Process alarm comp. value	disabled (0) / enabled (1)	disabled
		Ch 0 ... Ch 1: Process alarm end value	disabled (0) / enabled (1)	disabled
		Ch 0 ... Ch 1: Counting mode	count endless (0) / on–e - –orward (1) / on–e - –ackwards (2) / on–e - –o main direction (3) / periodic forward (4) / periodic backwards (5)/ periodic – no main direction (6)	count endless
		Ch 0 ... Ch 1: Comparison function	disabled (0) / higher equal comparison value (1) / lower equal comparison value (2)/ equal comp value (3)	disabled
		Ch 0 ... Ch 1: Counter dir. signal B inv.	disabled (0) / enabled (1)	disabled
		Ch 0 ... Ch 1: Signal mode	Rotary transduc–r - –ingle (0) / Rotary transduc–r - –ouble (1) / Rotary transduc–r - –uadruple (2) / Pulse and Direction (3)/ disabled (4)	disabled
		Ch 0 ... Ch 1: Counter behavior internal gate	Interrupt counting (0) / Cancel counting (1)	interrupt counting
		Ch 0 ... Ch 1: Set value	-2147483648 2147483647	0
		Ch 0 ... Ch 1: End value	-2147483648 2147483647	2147483647
		Ch 0 ... Ch 1: Load value	-2147483648 2147483647	0
		Ch 0 ... Ch 1: Hysteresis	0 ... 255	0

Product	Part No.	Parameter	Optional values	Default value
Channel Frequency Measurement, 100 kHz	EP-5212	Ch 0 ... Ch 1: Input filter	5µs [187 kHz] (0) / 11µs [94 kHz] (1) / 21µs [47 kHz] (2) / 43µs [23 kHz] (3) / 83µs [12 kHz] (4) / 167µs [6 kHz] (5) / 333µs [3 kHz] (6) / 667µs [1.5 kHz] (7) / 1ms [732 Hz] (8) / 3ms [366 Hz] (9) / 5ms [183 Hz] (10) / 11ms [92 Hz] (11) / 22ms [46 Hz] (12) / 43ms [23 Hz] (13) / 91ms [11 Hz] (14) / 167ms [6 Hz] (15) / 333ms [3 Hz] (16)	5µs [187 kHz]
2 Channels PWM Output, Positive Logic, 24Vdc, 0.5A	EP-5422	Ch 0 ... Ch 1: Period duration = n*20,83ns	1,202 ... 8,388,607	1,202
2 Channels PWM Output, Positive Logic, 24Vdc, 2A	EP-5442			
IO-Link Communication module, 4 Channels	EP-5324	Operating mode	disabled / DO / DI / IO-Link	disabled
		Port Cycle	Free running / Fixed cycle / Message sync	Free running
		Port Cycle time [n x 0.1 ms]	4 ... 1326	4
		IO-Link device check	disabled / type compare / identical	disabled
		DS activation state	disabled / enabled / Clear	disabled
		Channel diagnostics	disabled/ enabled	disabled
		Process data length input	0 Byte / 1 Byte / 2 Byte / ... / 32 Byte / auto	auto
		Process data length output	0 Byte / 1 Byte / 2 Byte / ... / 32 Byte / auto	auto
Analog Input, 4 Channels Voltage/ Current 16 Bits 2-, 3-, or 4-Wire	EP-3164	Frequency suppression	disabled (0) / 50 Hz (1) / 60 Hz (2) / Average over 16 values (3)	disabled
		Ch 0 ... Ch 3: Measurement range	0 to 20 mA (0) / 4 to 20 mA (1) / 0 V to 10 V (2) / 10 to 10 V (3) / 0 to 5 V (4) / -5 to 5 V (5) / 1 to 5 V (6) / 2 to 10 V (7) / disabled (8)	disabled
Analog Input, 4 Channels Voltage/ Current 12 Bits 2-, 3-, or 4-Wire	EP-3124	Same as EP-3164	Same as EP-3164	Same as EP-3164

Product	Part No.	Parameter	Optional values	Default value
Analog Input, 4 Channels Voltage/ Current 16 Bits with Diagnostics 2-, 3-, or 4-Wire	EP-3264	Frequency suppression	disabled (0) / 50 Hz (1) / 60 Hz (2) / Average over 16 values (3)	disabled
		Ch 0 ... Ch 3: Channel diagnosis	disabled (0) / enabled (1)	disabled
		Ch 0 ... Ch 3: Diag short circuit 24V	disabled (0) / enabled (1)	disabled
		Ch 0 ... Ch 3: Diag line break 24V	disabled (0) / enabled (1)	disabled
		Ch 0 ... Ch 3: Measurement range	0 to 20 mA (0) / 4 to 20 mA (1) / 0 V to 10 V (2) / -10 to 10 V (3) / 0 to 5 V (4) / -5 to 5 V (5) / 1 to 5 V (6) / 2 to 10 V (7) / disabled (8)	disabled
Analog Input, 4 Channels Voltage/ Current 16 Bits with Diagnostics 2-, 3-, or 4-Wire, Differential	EP-3664	Frequency suppression	disabled (0) / 50 Hz (1) / 60 Hz (2) / Average over 16 values (3)	disabled
		Ch 0 ... Ch 3: Channel diagnosis	disabled (0) / enabled (1)	disabled
		Ch 0 ... Ch 3: Diag short circuit 24V	disabled (0) / enabled (1)	disabled
		Ch 0 ... Ch 3: Diag line break 24V	disabled (0) / enabled (1)	disabled
		Ch 0 ... Ch 3: Measurement range	0 to 20 mA (0) / 4 to 20 mA (1) / 0 V to 10 V (2) / -10 to 10 V (3) / 0 to 5 V (4) / -5 to 5 V (5) / 1 to 5 V (6) / 2 to 10 V (7) / disabled (8)	disabled

Product	Part No.	Parameter	Optional values	Default value
Analog Input, 8 Channels Current 16 Bits 2-, 3-, or 4-Wire	EP-3368	Frequency suppression	disabled (0) / 50 Hz (1) / 60 Hz (2) / Average over 16 values (3)	disabled
		Ch 0 ... Ch 3: Measurement range	0 to 20 mA (0) / 4 to 20 mA (1) / disabled (2)	disabled
Analog Input, 8 Channels Current 16 Bits 2-, 3-, or 4-Wire, Channel Diagnostic	EP-3468	Frequency suppression	disabled (0) / 50 Hz (1) / 60 Hz (2) / Average over 16 values (3)	disabled
		K 0 ... K 7: Channel diagnosis	disabled (0) / enabled (1)	disabled
		K 0 ... K 7: Diag short circuit 24V	disabled (0) / enabled (1)	disabled
		Ch 0 ... Ch 3: Measurement range	0 to 20 mA (0) / 4 to 20 mA (1) / disabled (2)	disabled
Analog Input, 4 Channels Voltage/ Current 16 Bits 2-, 3-, or 4-Wire	EP-3164	Ch 0 ... Ch 3 Data format	S5 Data format (0) / S7 Data format (1)	S7 Data format
		Ch 0 ... Ch 3 Output range	0 to 20 mA (0) / 4 to 20 mA (1) / 0 to 10 V (2) / -10 to 10 V (3) / 0 to 5 V (4) / -5 to 5 V (5) / 1 to 5 V (6) / 2 to 10 V (7) / disabled (8)	disabled
		Ch 0 ... Ch 3 Substitute value	depending on the channel data format (S5/S7), refer to the Tables “Value range” within the module descriptions	0

Product	Part No.	Parameter	Optional values	Default value
Analog Input, 4 Channels RTD 16 Bits with Diagnostics 2-, 3-, or 4-Wire	EP-3704	Temperature unit	Degree Celsius (0) / Degree Fahrenheit (1) / Degree Kelvin (2)	Degree Celsius
		Ch 0 ... Ch 3 Measurement range	PT100 -200 ... 850 °C (0) PT200 -200 ... 850 °C (1) PT500 -200 ... 850 °C (2) PT1000 -200.. 850 °C (3) NI100 -60 ... 250 °C (4) / NI120 -80 ... 260 °C (5) / NI200 -60 ... 250 °C (6) / NI500 -60 ... 250 °C (7) / NI1000 -60 ... 250 Degree (8) / Cu10 -100 ... 260 °C (9) / Resistance 40 Ω (10) / Resistance 80 Ω (11) / Resistance 150 Ω (12) / Resistance 300 Ω (13) / Resistance 500 Ω (14) / Resistance 1 kΩ (15)/ Resistance 2 kΩ (16)/ Resistance 4 kΩ (17)/ disabled (18)	disabled
		Ch 0 ... Ch 3 Connection type	2-wire (0) / 3-wire (1) / 4-wire (2)	2-wire
		Ch 0 ... Ch 3 Conversion time	240ms (0) / 130ms (1) / 80ms (2) / 55ms (3) / 43ms (4) / 36ms (5)	80ms
		Ch 0 ... Ch 3 Channel diagnostics	disabled (0) / enabled (1)	disabled
		Ch 0 ... Ch 3 Limit value monitoring	disabled (0) / enabled (1)	disabled
		Ch 0 ... Ch 3 High limit value	-32,768 ... 32,767	0
		Ch 0 ... Ch 3 Low limit value	-32,768 ... 32,767	0

Product	Part No.	Parameter	Optional values	Default value
Analog Input, 4 Channels TC 16 Bits with Diagnostics 2-, 3-, or 4-Wire	EP-3804	Temperature unit	Degree Celsius (0) / Degree Fahrenheit (1) / Degree Kelvin (2)	Degree Celsius
		Ch 0 ... Ch 3 Measurement range	TC Type J (0) / TC Type K (1) / TC Type N (2) / TC Type R (3) / TC Type S (4) / TC Type T (5) / TC Type B (6) / TC Type C (7) / TC Type E (8) / TC Type L (9) / TC Type U (10) / ± 15.625 mV (11) / ± 31.25 mV (12) / ± 62.5 mV (13) / ± 125 mV (14) / ± 250 mV (15) / ± 500 mV (16) / ± 1,000 mV (17) / ± 2,000 mV (18) / disabled (19)	disabled
		Ch 0 ... Ch 3 Cold junction compensation	internal (0) / external Channel 0 (1)/ external Channel 1 (2) / external Channel 2 (3) / external Channel 3 (4)	internal
		Ch 0 ... Ch 3 Conversion time	240ms (0) / 130ms (1) / 80ms (2) / 55ms (3) / 43ms (4) / 36ms (5)	80ms
		Ch 0 ... Ch 3 Channel diagnostics	disabled (0) / enabled (1)	disabled
		Ch 0 ... Ch 3 Limit value monitoring	disabled (0) / enabled (1)	disabled
		Ch 0 ... Ch 3 High limit value	-32,768 ... 32,767	0
		Ch 0 ... Ch 3 Low limit value	-32,768 ... 32,767	0
Power Measurement Module, 8 Channels	EP-1813	Current range	1 A (0) / 5 A (1)	1 A
		Harmonic select	1 ... 31 (1 ... 31)	1 = fundamental
		Voltage alarm lower limit enable	disabled (0) / enabled (1)	disabled
		Voltage alarm lower limit	0 ... 300 V (0 ... 27648)	0 = 0x0
		Voltage alarm upper limit enable	disabled (0) / enabled (1)	disabled
		Voltage alarm upper limit	0 ... 300 V (0 ... 27648)	300 V = 0x6C00
		Current alarm lower limit enable	disabled (0) / enabled (1)	disabled
		Current alarm lower limit	0 ... 5 A (0 ... 27648)	0 = 0x0

Product	Part No.	Parameter	Optional values	Default value
		Current alarm upper limit enable	disabled (0) / enabled (1)	disabled
		Current alarm upper limit	0 ... 5 A (0 ... 27648)	100% = 0x6C00
		Current imbalance alarm enable	disabled (0) / enabled (1)	disabled
		Current imbalance alarm limit	0 ... 100% (0 ... 16383)	100%
		Frequency alarm lower limit enable	disabled (0) / enabled (1)	disabled
		Frequency alarm lower limit	45 ... 65 Hz (5760 ... 8320)	45 Hz
		Frequency alarm upper limit enable	disabled (0) / enabled (1)	disabled
		Frequency alarm upper limit	45 ... 65 Hz (5760 ... 8320)	65 Hz
		Power factor alarm enable	disabled (0) / enabled (1)	disabled
		Power factor alarm lower limit	0 ... 1 (0 ... 16383)	0
		Diagnostic alarm	disabled (0) / enabled (1)	disabled
		Channel 0 ... 7: Measuring value	RMS voltage L1 (0) / L2 (1) / L3 (2)	
			RMS voltage average (3)	
			RMS current L1 (4) / L2 (5) / L3 (6)	
			RMS current average (7)	
			Peak current L1 (8) / L2 (9) / L3 (10)	
			Line frequency (11)	
			Harmonic power L1 (12) / L2 (13) / L3 (14)	
			Harmonic reactive power L1 (15) / L2 (16) / L3 (17)	
			Harmonic apparent power L1 (18) / L2 (19) / L3 (20)	
			Power factor L1 (21) / L2 (22) / L3 (23)	
			Total power factor (24)	
			Harmonic voltage L1 (25) / L2 (26) / L3 (27)	
			Harmonic current L1 (28) / L2 (29) / L3 (30)	
			Active power L1 (31) / L2 (32) / L3 (33)	
			Active power total (34)	
			Reactive power L1 (35) / L2 (36) / L3 (37)	
			Reactive power total (38)	
			Apparent power L1 (39) / L2 (40) / L3 (41)	
			Apparent power total (42)	

Product	Part No.	Parameter	Optional values	Default value
			Received act. energy counter L1 (43) / L2 (44) / L3 (45)	
			Delivered act. energy counter L1 (46) /L2 (47) / L3 (48)	
			React. energy leading counter L1 (49) / L2 (50) / L3 (51)	
			React. energy lagging counter L1 (52) / L2 (53) / L3 (54)	
			Status (55)	
			disabled (56)	disabled

3.10 Data Width of I/O Module, Dependent on the Network Adapter Used

3.10.1 EPXPBS001

Part No.	Module	Configuration	Parameter	Diagnostics	Process data	
		Bytes	Bytes	Bytes	Input Bytes	Output Bytes
EPXPBS001	PROFIBUS DP-V1 Network Adapter	--	8	47	--	--
EP-1214	Digital Input, 4 Points, Positive Logic 24Vdc, 2-, 3-, or 4-Wire	3	7	47	1	--
EP-1218	Digital Input, 8 Points, Positive Logic, 24Vdc 2-Wire	3	11	47	1	--
EP-1318	Digital Input, 8 Points, Positive Logic, 24Vdc 3-Wire	3	11	47	1	--
EP-125F	Digital Input, 16 Points, Positive Logic, 24Vdc, 1-Wire	3	--	47	2	--
EP-12F4	Digital Input, 4 Points, Positive Logic 24Vdc, 2-, 3-, or 4-Wire, Time stamp	3	11	47	60	--
EP-153F	Digital Input, 16 Points, Negative Logic, 24Vdc 1-Wire	3	--	47	2	--
EP-1804	Digital Input, 4 Points 110/230Vac (65 – 277Vac), 2-Wire, Isolated	3	--	47	1	--
EP-2214	Digital Output, 4 Points, Positive Logic 24Vdc, 0.5A, 2-, 3-, or 4-Wire	3	4	47	--	1
EP-2614	Digital Output, 4 Points, Positive Logic 24Vdc, 2.0A, 2-, 3-, or 4-Wire	3	4	47	--	1
EP-2634	Digital Output, 4 Points, Positive/ Negative Logic 24Vdc, 2.0A, 2-,3-, or 4-Wire	3	4	47	--	1
EP-2218	Digital Output, 8 Points, Positive Logic, 24Vdc, 0.5A, 2-Wire	3	4	47	--	1
EP-225F	Digital Output, 16 Points, Positive Logic, 24Vdc, 0.5A, 1-Wire	3	--	47	--	2
EP-2814	Digital Output, 4 Points, Positive Logic, 230Vac, 1A	3	4	47	--	1
EP-291F	Digital Output, 16 Points, Negative Logic, 24Vdc 1-Wire	3	--	47	--	2
EP-2714	Digital Relay Output, 4 Points, Positive Logic, 24 - 220 Vdc/Vac, 6A, 2-Wire	3	4	47	--	1
EP-5111	1 Channel High Speed Counter, AB 100 kHz 1 DO 24Vdc, 0.5A	3	24	47	12	10
EP-5112	2 Channel High Speed Counter, AB 100 kHz	3	43	47	12	12

Part No.	Module	Configuration	Parameter	Diagnostics	Process data	
		Bytes	Bytes	Bytes	Input Bytes	Output Bytes
EP-5212	2 Channel Frequency Measurement, 100 kHz	3	5	47	20	12
EP-5261	1 Channel Serial Communications, 232, 422, 485	3	9	47	16	16
EP-5311	1 Channel SSI Encoder, BCD or Gray-Code Format, 5/24 Vdc	3	11	47	6	0
EP-5422	2 Channels PWM Output, Positive Logic, 24Vdc, 0.5 A	3	11	47	4	12
EP-5442	2 Channels PWM Output, Positive Logic, 24Vdc, 2 A	3	11	47	4	12
EP-5324	IO-Link Communication module, 4 Channels	3	29	47	1)	1)
EP-3164	Analog Input, 4 Channels Voltage/Current 16 Bits 2-, 3-, or 4-Wire	3	9	47	8	--
EP-3264	Analog Input, 4 Channels Voltage/ Current 16 Bits with Diagnostics 2-, 3-, or 4-Wire	3	11	47	8	--
EP-3664	Analog Input, 4 Channels Voltage/ Current 16 Bits with Diagnostics 2-, 3-, or 4-Wire, Differential	3	11	47	8	--
EP-3124	Analog Input, 4 Channels Voltage/ Current 12 Bits 2-, 3-, or 4-Wire	3	9	47	8	--
EP-3804	Analog Input, 4 Channels TC 16 Bits with Diagnostics 2-, 3-, or 4-Wire	3	31	47	8	--
EP-3368	Analog Input, 8 Channels Current 16 Bits 2-, 3-, or 4-Wire	3	13	47	16	--
EP-3468	Analog Input, 8 Channels Current 16 Bits 2-, 3-, or 4-Wire, Channel Diagnostic	3	13	47	16	--
EP-4164	Analog Output, 4 Channels Voltage/Current 16 Bits 2-, 3-, or 4-Wire	3	15	47	--	8
EP-4264	Analog Output, 4 Channels Voltage/ Current 16 Bits with Diagnostics 2-, 3-, or 4-Wire	3	16	47	--	8
EP-3704	Analog Input, 4 Channels RTD 16 Bits with Diagnostics 2-, 3-, or 4-Wire	3	31	47	8	--
EP-1813	Power Measurement Module, 8 Channels	3	30	47	16	16
EP-1901	1 Safe Feed-Input, 24 Vdc	3	--	47	4	--
EP-1922	1 Safe Feed-Input, 24 Vdc	3	--	47	4	--
EP-1902	2 Safe Feed-Inputs, 24 Vdc	3	--	47	4	--
Max. data (in bytes)		244	244	244	244	244

Part No.	Module	Configuration	Parameter	Diagnostics	Process data	
		Bytes	Bytes	Bytes	Input Bytes	Output Bytes

[1)]The available data lengths are 4 bytes, 8 bytes, 16 bytes & 32 bytes along with the 2 bytes process data for IO-Link module.

3.10.2 EPXPNS001/EPXPNS101

Part No.	Module	Configuration	Parameter	Diagnostics	Process data	
		Bytes	Bytes	Bytes	Input Bytes	Output Bytes
EPXPNS001 EPXPNS101	PROFINET IRT Network Adapter, 2 Cu RJ45 Ports, 1024 bytes (Input + Output)	4	10	47	4	4
EP-1214	Digital Input, 4 Points, Positive Logic 24Vdc, 2-, 3-, or 4-Wire	4	8	47	2	1
EP-1218	Digital Input, 8 Points, Positive Logic, 24Vdc 2-Wire	4	12	47	2	1
EP-1318	Digital Input, 8 Points, Positive Logic, 24Vdc 3-Wire	4	12	47	2	1
EP-125F	Digital Input, 16 Points, Positive Logic, 24Vdc, 1-Wire	4	--	47	3	1
EP-12F4	Digital Input, 4 Points, Positive Logic 24Vdc, 2-, 3-, or 4-Wire, Time stamp	4	12	47	61	1
EP-153F	Digital Input, 16 Points, Negative Logic, 24Vdc 1-Wire	4	--	47	3	1
EP-1804	Digital Input, 4 Points 110/230Vac (65 – 277Vac), 2-Wire, Isolated	4	--	47	2	1
EP-2214	Digital Output, 4 Points, Positive Logic 24Vdc, 0.5A, 2-, 3-, or 4-Wire	4	5	47	1	2
EP-2614	Digital Output, 4 Points, Positive Logic 24Vdc, 2.0A, 2-, 3-, or 4-Wire	4	5	47	1	2
EP-2634	Digital Output, 4 Points, Positive/Negative Logic 24Vdc, 2.0A, 2-, 3-, or 4-Wire	4	5	47	1	2
EP-2218	Digital Output, 8 Points, Positive Logic, 24Vdc, 0.5A, 2-Wire	4	5	47	1	2
EP-225F	Digital Output, 16 Points, Positive Logic, 24Vdc, 0.5A, 1-Wire	4	--	47	1	3
EP-2814	Digital Output, 4 Points, Positive Logic, 230Vac, 1A	4	5	47	1	2
EP-291F	Digital Output, 16 Points, Negative Logic, 24Vdc 1-Wire	4	--	47	1	3
EP-2714	Digital Relay Output, 4 Points, Positive Logic, 24 - 220 Vdc/Vac, 6A, 2-Wire	4	5	47	1	2
EP-5111	1 Channel High Speed Counter, AB 100 kHz 1 DO 24Vdc, 0.5A	4	25	47	13	11
EP-5112	2 Channel High Speed Counter, AB 100 kHz	4	44	47	13	13

Part No.	Module	Configuration	Parameter	Diagnostics	Process data	
		Bytes	Bytes	Bytes	Input Bytes	Output Bytes
EP-5212	2 Channel Frequency Measurement, 100 kHz	4	6	47	21	13
EP-5261	1 Channel Serial Communications, 232, 422, 485	4	10	47	17	17
EP-5311	1 Channel SSI Encoder, BCD or Gray-Code Format, 5/24 Vdc	4	12	47	7	1
EP-5422	2 Channels PWM Output, Positive Logic, 24Vdc, 0.5 A	4	12	47	5	13
EP-5442	2 Channels PWM Output, Positive Logic, 24Vdc, 2 A	4	12	47	5	13
EP-5324	IO-Link Communication module, 4 Channels	4	30	47	1)	1)
EP-3164	Analog Input, 4 Channels Voltage/Current 16 Bits 2-, 3-, or 4-Wire	4	10	47	9	1
EP-3264	Analog Input, 4 Channels Voltage/Current 16 Bits with Diagnostics 2-, 3-, or 4-Wire	4	12	47	9	1
EP-3664	Analog Input, 4 Channels Voltage/ Current 16 Bits with Diagnostics 2-, 3-, or 4-Wire, Differential	4	12	47	9	1
EP-3124	Analog Input, 4 Channels Voltage/Current 12 Bits 2-, 3-, or 4-Wire	4	10	47	9	1
EP-3804	Analog Input, 4 Channels TC 16 Bits with Diagnostics 2-, 3-, or 4-Wire	4	32	47	9	1
EP-3368	Analog Input, 8 Channels Current 16 Bits 2-, 3-, or 4-Wire	4	14	47	17	1
EP-3468	Analog Input, 8 Channels Current 16 Bits 2-, 3-, or 4-Wire, Channel Diagnostic	4	16	47	17	1
EP-4164	Analog Output, 4 Channels Voltage/ Current 16 Bits 2-, 3-, or 4-Wire	4	16	47	1	9
EP-4264	Analog Output, 4 Channels Voltage/ Current 16 Bits with Diagnostics 2-, 3-, or 4-Wire	4	17	47	1	9
EP-3704	Analog Input, 4 Channels RTD 16 Bits with Diagnostics 2-, 3-, or 4-Wire	4	32	47	9	1
EP-1813	Power Measurement Module, 8 Channels	4	31	47	17	17
EP-1901	1 Safe Feed-Input, 24 Vdc	4	--	47	5	1
EP-1922	2 Safe Feed-Inputs, 24 Vdc, Programmable Delay	4	--	47	5	1
EP-1902	2 Safe Feed-Inputs, 24 Vdc	4	--	47	5	1
Max. data (in bytes)		260	4362	1408	512	512

1) The available data lengths are 4 bytes, 8 bytes, 16 bytes, 32 bytes, 64 bytes & 128 bytes along with the 2 bytes process data for IO-Link module.

3.10.3 EPXETC001

Part No.	Module	Configuration	Parameter	Diagnostics	Process data	
		Bytes	Bytes	Bytes	Input Bytes	Output Bytes
EPXETC001	EtherCAT Network Adapter, 2 Cu RJ45 Ports, 1024 bytes (Input + Output)	256	4096	3328	1024	1024
EP-1214	Digital Input, 4 Points, Positive Logic 24Vdc, 2-, 3-, or 4-Wire	4	4	47	1	--
EP-1218	Digital Input, 8 Points, Positive Logic, 24Vdc 2-Wire	4	8	47	1	--
EP-1318	Digital Input, 8 Points, Positive Logic, 24Vdc 3-Wire	4	8	47	1	--
EP-125F	Digital Input, 16 Points, Positive Logic, 24Vdc, 1-Wire	4	--	47	2	--
EP-12F4	Digital Input, 4 Points, Positive Logic 24Vdc, 2-, 3-, or 4-Wire, Time stamp	4	1	47	61	1
EP-153F	Digital Input, 16 Points, Negative Logic, 24Vdc 1-Wire	4	--	47	3	--
EP-1804	Digital Input, 4 Points 110/230Vac (65 – 277Vac), 2-Wire, Isolated	4	4	47	2	--
EP-2214	Digital Output, 4 Points, Positive Logic 24Vdc, 0.5A, 2-, 3-, or 4-Wire	4	1	47	1	1
EP-2614	Digital Output, 4 Points, Positive Logic 24Vdc, 2.0A, 2-, 3-, or 4-Wire	4	1	47	1	1
EP-2634	Digital Output, 4 Points, Positive/Negative Logic 24Vdc, 2.0A, 2-, 3-, or 4-Wire	4	62	47	1	1
EP-2218	Digital Output, 8 Points, Positive Logic, 24Vdc, 0.5A, 2-Wire	4	1	47	1	1
EP-225F	Digital Output, 16 Points, Positive Logic, 24Vdc, 0.5A, 1-Wire	4	--	47	1	2
EP-2814	Digital Output, 4 Points, Positive Logic, 230Vac, 1A	4	1	47	1	1
EP-291F	Digital Output, 16 Points, Negative Logic, 24Vdc 1-Wire	4	--	47	1	2
EP-2714	Digital Relay Output, 4 Points, Positive Logic, 24 - 220 Vdc/Vac, 6A, 2-Wire	4	1	47	1	1
EP-5111	1 Channel High Speed Counter, AB 100 kHz 1 DO 24Vdc, 0.5A	4	82	47	13	10
EP-5112	2 Channel High Speed Counter, AB 100 kHz	4	97	47	13	12
EP-5212	2 Channel Frequency Measurement, 100kHz	4	6	47	21	12
EP-5261	1 Channel Serial Communications, 232, 422, 485	4	10	47	17	16
EP-5311	1 Channel SSI Encoder, BCD or Gray-Code Format, 5/24 Vdc	4	11	47	7	--
EP-5422	2 Channels PWM Output, Positive Logic, 24Vdc, 0.5 A	4	8	47	4	12

Part No.	Module	Configuration	Parameter	Diagnostics	Process data	
		Bytes	Bytes	Bytes	Input Bytes	Output Bytes
EP-5442	2 Channels PWM Output, Positive Logic, 24Vdc, 2 A	4	8	47	4	12
EP-5324	IO-Link Communication module, 4 Channels	--	--	47	19	18
EP-3164	Analog Input, 4 Channels Voltage/Current 16 Bits 2-, 3-, or 4-Wire	4	6	47	8	--
EP-3264	Analog Input, 4 Channels Voltage/Current 16 Bits with Diagnostics 2-, 3-, or 4-Wire	4	8	47	8	--
EP-3664	Analog Input, 4 Channels Voltage/ Current 16 Bits with Diagnostics 2-, 3-, or 4-Wire, Differential	4	21	47	9	-
EP-3124	Analog Input, 4 Channels Voltage/Current 12 Bits 2-, 3-, or 4-Wire	4	6	47	8	--
EP-3804	Analog Input, 4 Channels TC 16 Bits with Diagnostics 2-, 3-, or 4-Wire	4	28	47	8	--
EP-3368	Analog Input, 8 Channels Current 16 Bits 2-, 3-, or 4-Wire	4	17	20	17	--
EP-3468	Analog Input, 8 Channels Current 16 Bits 2-, 3-, or 4-Wire, Channel Diagnostic	4	33	20	17	--
EP-4164	Analog Output, 4 Channels Voltage/ Current 16 Bits 2-, 3-, or 4-Wire	4	12	47	1	8
EP-4264	Analog Output, 4 Channels Voltage/ Current 16 Bits with Diagnostics 2-, 3-, or 4-Wire	4	13	47	1	8
EP-3704	Analog Input, 4 Channels RTD 16 Bits with Diagnostics 2-, 3-, or 4-Wire	4	28	47	8	--
EP-1813	Power Measurement Module, 8 Channels	4	--	47	17	16
EP-1901	1 Safe Feed-Input, 24 Vdc	4	--	47	4	--
EP-1922	2 Safe Feed-Inputs, 24 Vdc, Programmable Delay	4	--	47	4	--
EP-1902	2 Safe Feed-Inputs, 24 Vdc	4	--	47	4	--
Max. data (in bytes)		1514 per message + CoE	1514 per message + CoE	1514 per message + CoE	1024	1024

3.10.4 EPXEIP001

Part No.	Module	Configuration	Parameter	Diagnostics	Process data	
		Bytes	Bytes	Bytes	Input Bytes	Output Bytes
EPXEIP001	EtherNet/IP Network Adapter	8	--	--	2/10[1)]	2/10[1)]
EP-1214	Digital Input, 4 Points, Positive Logic 24Vdc, 2-, 3-, or 4-Wire	4	4	47	1	--

Part No.	Module	Configuration	Parameter	Diagnostics	Process data	
		Bytes	Bytes	Bytes	Input Bytes	Output Bytes
EP-1218	Digital Input, 8 Points, Positive Logic, 24Vdc 2-Wire	4	8	47	1	--
EP-1318	Digital Input, 8 Points, Positive Logic, 24Vdc 3-Wire	4	8	47	1	--
EP-125F	Digital Input, 16 Points, Positive Logic, 24Vdc, 1-Wire	4	--	47	2	--
EP-12F4	Digital Input, 4 Points, Positive Logic 24Vdc, 2-, 3-, or 4-Wire, Time stamp	4	8	47	60	--
EP-153F	Digital Input, 16 Points, Negative Logic, 24Vdc 1-Wire	4	--	47	2	--
EP-1804	Digital Input, 4 Points 110/230Vac (65 – 277Vac), 2-Wire, Isolated	4	--	47	1	--
EP-2214	Digital Output, 4 Points, Positive Logic 24Vdc, 0.5A, 2-, 3-, or 4-Wire	4	1	47	--	1
EP-2614	Digital Output, 4 Points, Positive Logic 24Vdc, 2.0A, 2-, 3-, or 4-Wire	4	1	47	--	1
EP-2634	Digital Output, 4 Points, Positive/Negative Logic 24Vdc, 2.0A, 2-, 3-, or 4-Wire	4	1	47	--	1
EP-2218	Digital Output, 8 Points, Positive Logic, 24Vdc, 0.5A, 2-Wire	4	1	47	--	1
EP-225F	Digital Output, 16 Points, Positive Logic, 24Vdc, 0.5A, 1-Wire	4	--	47	--	2
EP-2814	Digital Output, 4 Points, Positive Logic, 230Vac, 1A	4	1	47	--	1
EP-291F	Digital Output, 16 Points, Negative Logic, 24Vdc 1-Wire	4	--	47	--	2
EP-2714	Digital Relay Output, 4 Points, Positive Logic, 24 - 220 Vdc/Vac, 6A, 2-Wire	4	1	47	--	1
EP-5111	1 Channel High Speed Counter, AB 100 kHz 1 DO 24Vdc, 0.5A	4	21	47	12	10
EP-5112	2 Channel High Speed Counter, AB 100 kHz	4	40	47	12	12
EP-5212	2 Channel Frequency Measurement, 100kHz	4	2	47	20	12
EP-5261	1 Channel Serial Communications, 232, 422, 485	4	6	47	16	16
EP-5311	1 Channel SSI Encoder, BCD or Gray-Code Format, 5/24 Vdc	4	8	47	6	0
EP-5422	2 Channels PWM Output, Positive Logic, 24Vdc, 0.5 A	4	8	47	4	12
EP-5442	2 Channels PWM Output, Positive Logic, 24Vdc, 2 A	4	8	47	4	12
EP-5324	IO-Link Communication module, 4 Channels	2)				
EP-3164	Analog Input, 4 Channels Voltage/Current 16 Bits 2-, 3-, or 4-Wire	4	6	47	8	--

Part No.	Module	Configuration	Parameter	Diagnostics	Process data	
		Bytes	Bytes	Bytes	Input Bytes	Output Bytes
EP-3264	Analog Input, 4 Channels Voltage/Current 16 Bits with Diagnostics 2-, 3-, or 4-Wire	4	8	47	8	--
EP-3664	Analog Input, 4 Channels Voltage/ Current 16 Bits with Diagnostics 2-, 3-, or 4-Wire, Differential	4	8	47	8	-
EP-3124	Analog Input, 4 Channels Voltage/Current 12 Bits 2-, 3-, or 4-Wire	4	6	47	8	--
EP-3804	Analog Input, 4 Channels TC 16 Bits with Diagnostics 2-, 3-, or 4-Wire	4	28	47	8	--
EP-3368	Analog Input, 8 Channels Current 16 Bits 2-, 3-, or 4-Wire	4	10	47	16	--
EP-3468	Analog Input, 8 Channels Current 16 Bits 2-, 3-, or 4-Wire, Channel Diagnostic	4	12	47	16	--
EP-4164	Analog Output, 4 Channels Voltage/ Current 16 Bits 2-, 3-, or 4-Wire	4	12	47	--	8
EP-4264	Analog Output, 4 Channels Voltage/ Current 16 Bits with Diagnostics 2-, 3-, or 4-Wire	4	13	47	--	8
EP-3704	Analog Input, 4 Channels RTD 16 Bits with Diagnostics 2-, 3-, or 4-Wire	4	28	47	8	--
EP-1813	Power Measurement Module, 8 Channels	4	27	47	16	16
EP-1901	1 Safe Feed-Input, 24 Vdc	4	--	47	4	--
EP-1922	2 Safe Feed-Inputs, 24 Vdc, Programmable Delay	4	--	47	4	--
EP-1902	2 Safe Feed-Inputs, 24 Vdc	4	--	47	4	--
Max. data (in bytes)		264	4096	3008	496/504[1)]	496/504[1)]

[1)]Depending upon on the assembly used.
[2)]You can select the length of the process input data and process output data from 2 bytes to 128 bytes including the 2 Byte process data for IO-Link module using Class 67 (module parameter), instance (slot of the EP-5324) Attribute 65 (length of input data) or Attribute 66 (length of output data).

Section 4: Detailed Descriptions of the Fieldbus Network Adapters

4.1 Profibus DP Network Adapter EPXPBS001

The EPXPBS001 network adapter is a PROFIBUS-DP device certified by the PROFIBUS user organization. The network adapter is the head module for the RSTi-EP communication bus, to which up to 64 active RSTi-EP modules can be connected. The PROFIBUS-DP network adapter has a Sub-D socket and supports all services in accordance with the DP-V1 specification.

The network adapter can be accessed with a system-independent web server application via the USB service interface. Thus, all information, such as diagnostics, status values and parameters, can be read and all connected modules can be simulated or forced.

The station's main power supply is integrated in the network adapter. Power is supplied via two 4-pole connectors, separated into the input and output current paths.

Figure 17: Fieldbus Network Adapter EPXPBS001

4.1.1 LEDs

Figure 18: LED Status Indicators EPXPBS001

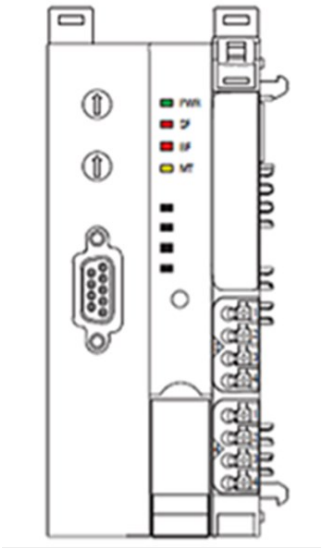

LED Status Indicators

LED	Indication	LED State/Description
PWR	Power LED	**Green:** Supply voltage connected
SF	System fault	**Red:** Configuration error, or error in the network adapter, or error in a module, or there is a new diagnostic report **Red flashing:** Station in Force mode
BF	Bus fault	**Red:** No connection to the fieldbus **Red flashing:** Configuration error, no connection to the control unit, or error in the parameter set or slave address error or firmware update is running
MT	Maintenance Required	**Yellow:** Error on the system bus or fieldbus

LED Indicators EPXPBS001

LED	EPXPBS001
Power Supply	**Green:** Supply voltage > 18Vdc **Red:** At least one current path < 18 V
3.1	**Green:** Input current path supply voltage > 18Vdc
3.2	**Red:** Input current path supply voltage < 18Vdc
3.3	
3.4	**Red:** Internal fuse defective
4.1	**Green:** Output current path supply voltage > 18Vdc
4.2	**Red:** Output current path supply voltage < 18Vdc
4.3	
4.4	**Red:** Internal fuse defective

For error messages, refer to Section 12, LED Indicators and Troubleshooting.

4.1.2 Addressing

The network adapter on the PROFIBUS-DP is addressed via the two rotary switches.

Note: *A maximum of 125 addresses (1 to 125) can be assigned. Each address may be assigned only once in the overall bus structure. Addresses 1 and 2 are generally used by the control systems. Bus addresses 000 plus 126 and higher may not be used. The most significant digit is set with rotary switch **H**, the least significant digit with rotary switch **L**. The switches are labelled in the hexadecimal numbering system (0 to 9, A=10, B=11, C=12, ... F = 15). A hexadecimal to decimal conversion table is provided in the annex.*

Coding: Address = (H*16) + L

Figure 19: Rotary Switch Default Setting EPXPBS001: Address = 3

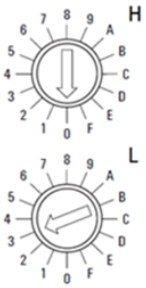

Addressing examples:

Figure 20: Examples for Addressing the EPXPBS001

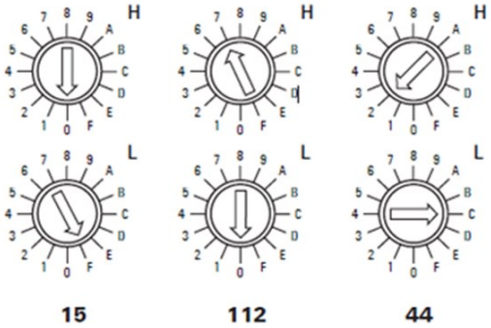

PROFIBUS address **15**: H = 0, L = F

PROFIBUS address **112**: H = 7, L = 0

PROFIBUS address **44**: H = 2, L = C

4.1.3 Connection Diagrams

Figure 21: Connection Diagram EPXPBS001

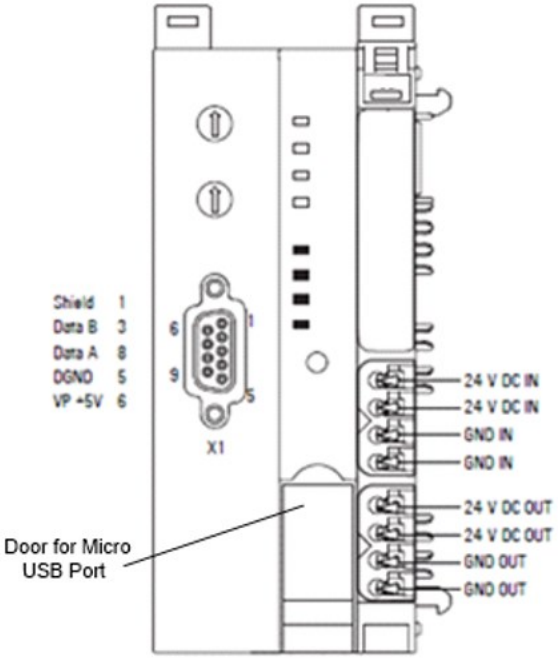

Figure 22: Block Diagram EPXPBS001

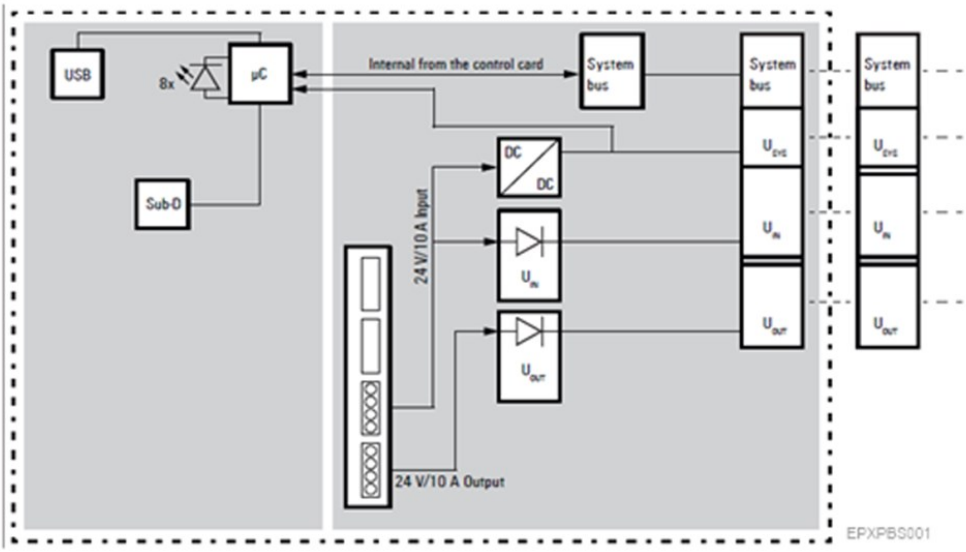

⚠ CAUTION

⚠ In case of a maximum power supply of >8 A and a maximum temperature of > +55°C (131 °F), all four contacts must be connected with 1.5 mm² wiring.

4.1.4 Specifications: EPXPBS001

Specification	Description	
System data		
Connection	9-pole SUB-D socket	
Fieldbus protocol	PROFIBUS-DP V1	
Process image	Input data width	max. 244 bytes
	Output data width	max. 244 bytes
	Parameter data	max. 244 bytes
	Diagnostic data	max. 244 bytes
Number of modules	Max. 64 active	
Configuration interface	Micro USB 2.0	
Transfer rate	Fieldbus	Max. 12 Mbps
	RTSi-EP system bus	Max. 48 Mbps
Supply		
Supply voltage for system and inputs	20.4V – 28.8V	
Supply voltage for outputs	20.4V – 28.8V	
Max. feed-in current for input modules	10 A	
Max. feed-in current for output modules	10 A	
Current consumption from system current path ISYS	100 mA	
Connection data		
Type of connection	Spring style	

Specification	Description	
Conductor cross-section	Single-wired, fine-wired	0.14 – 1.5 mm2 (AWG 16 – 26)
Weight		
Operating temperature	-20°C to +60°C (-4 °F to +140 °F)	
Storage temperature	-40°C to +85°C (-40 °F to +185 °F)	
Air humidity (operation/transport)	5% to 95%, noncondensing as per DIN EN 61131-2	
Width	52 mm (2.05 in)	
Depth	76 mm (2.99 in)	
Height	120 mm (4.72 in)	
Weight	223 g (7.87 oz)	
Configuration	The GSD file is available on the Support website https://www.emerson.com/Industrial-Automation-Controls/support for download and import into PAC Machine Edition. The GSD supporting a firmware release is part of the firmware upgrade kit, also available on the Support website.	
General data: refer to Section 1.3, General Technical Data for the Fieldbus Network Adapter.		

4.1.5 Modifiable Parameters EPXPBS001

Parameter	Additional explanations	Optional values	Default
IP address USB port†		192.168.1.202; 192.168.2.202, 192.168.3.202, 192.168.4.202, 192.168.5.202	192.168.1.202
DP-Alarm mode		V0 / V1	V1
DP alarm mode V0	**For mode V0, the alarm triggers are set in the parameter data.**		
Diagnostic alarm	These switches are always selectable, but they only have a function in mode V0. Diagnostic messages are generated which are not acknowledged by the PLC.	enabled / disabled	disabled
Process alarm		enabled / disabled	disabled
Hot-plug alarm		enabled / disabled	enabled
DP alarm mode V1	**In mode V1, the alarm triggers are set in the engineering environment.**		
Diagnostic alarm	These switches can be selected only in mode V1, in V0 they are inactive. Diagnostic messages are generated which are acknowledged by the PLC.	enabled / disabled	disabled
Process alarm		enabled / disabled	disabled
Hot-plug alarm		enabled / disabled	enabled
Identifier-related diagnosis	A diagnostic block is attached to the diagnostic message.	enabled / disabled	enabled
Channel-related diagnosis	A diagnostic block is attached to the diagnostic message.	enabled / disabled	enabled
Module status	A diagnostic block is attached to the diagnostic message.	enabled / disabled	enabled
Data format		Motorola / Intel	Motorola

Parameter	Additional explanations	Optional values	Default
Output behavior fieldbus error		All outputs off / activate replacement values / retain last value	All outputs off
Module behavior on hot swap		Continue data exchange / behavior as with fieldbus error	Continue data exchange
† Change requires restart of the network adapter.			

4.1.6 Supported Modules and Power Supplies

The following modules can be used with the current release of the RSTi-EP Profibus Network Adaptor.

Catalog Number	Module Description
Digital Input Modules	
EP-1214	Digital Input, 4 Points, Positive Logic 24Vdc, 2-, 3-, or 4-Wire
EP-1218	Digital Input, 8 Points, Positive Logic, 24Vdc 2-Wire
EP-1318	Digital Input, 8 Points, Positive Logic, 24Vdc 3-Wire
EP-125F	Digital Input, 16 Points, Positive Logic, 24Vdc, 1-Wire
EP-12F4	Digital Input, 4 Points, Positive Logic, 24Vdc, 2-, 3-, or 4-Wire, Time stamp
EP-153F	Digital Input, 16 Points, Negative Logic, 24Vdc 1-Wire
EP-1804	Digital Input, 4 Points 110/230Vac (65 – 277Vac), 2-Wire, Isolated
Digital Output Modules	
EP-2214	Digital Output, 4 Points, Positive Logic 24Vdc, 0.5A, 2-, 3-, or 4-Wire
EP-2614	Digital Output, 4 Points, Positive Logic 24Vdc, 2.0A, 2-, 3-, or 4-Wire
EP-2634	Digital Output, 4 Points, Positive/Negative Logic 24Vdc, 2.0A, 2-, 3-, or 4-Wire
EP-2218	Digital Output, 8 Points, Positive Logic, 24Vdc, 0.5A, 2-Wire
EP-225F	Digital Output, 16 Points, Positive Logic, 24Vdc, 0.5A, 1-Wire
EP-291F	Digital Output, 16 Points, Negative Logic, 24Vdc 1-Wire
Digital Relay Output Modules	
EP-2714	Digital Relay Output, 4 Points, Positive Logic, 24 -–220 Vdc/Vac, 6A, 2-Wire
EP-2814	Solid-state Relay Output Module
Analog Input Modules	
EP-3164	Analog Input, 4 Channels Voltage/Current 16 Bits 2-, 3-, or 4-Wire
EP-3264	Analog Input, 4 Channels Voltage/Current 16 Bits with Diagnostics 2-, 3-, or 4-Wire
EP-3664	Analog Input, 4 Channels Voltage/ Current 16 Bits with Diagnostics 2-, 3-, or 4-Wire, Differential
EP-3124	Analog Input, 4 Channels Voltage/Current 12 Bits 2-, 3-, or 4-Wire
EP-3368	Analog Input, 8 Channels Current 16 Bits 2-, 3-, or 4-Wire
EP-3468	Analog Input, 8 Channels Current 16 Bits 2-, 3-, or 4-Wire, Channel Diagnostic
EP-3704	Analog Input, 4 Channels RTD 16 Bits with Diagnostics 2-, 3-, or 4-Wire
EP-3804	Analog Input, 4 Channels TC 16 Bits with Diagnostics 2-, 3-, or 4-Wire
EP-1813	Power Measurement Module, 8 Channels
Analog Output Modules	
EP-4164	Analog Output, 4 Channels Voltage/Current 16 Bits 2-, 3-, or 4-Wire
EP-4264	Analog Output, 4 Channels Voltage/Current 16 Bits with Diagnostics 2-, 3-, or 4-Wire
Specialty Modules	
EP-5111	1 Channel High Speed Counter, AB 100 kHz 1 DO 24Vdc, 0.5A

Catalog Number	Module Description
EP-5112	2 Channel High Speed Counter, AB 100 kHz
EP-5212	2 Channel Frequency Measurement, 100 kHz
EP-5261	1 Channel Serial Communications, 232, 422, 485
EP-5311	1 Channel SSI Encoder, BCD or Gray-Code Format, 5/24 Vdc
EP-5422	2 Channels PWM Output, Positive Logic, 24Vdc, 0.5 A
EP-5442	2 Channels PWM Output, Positive Logic, 24Vdc, 2 A
EP-5324	IO-Link Communication module, 4 Channels
Power Feed Modules for Input Current Path	
EP-7631	Power Module, 1 Channel 24Vdc Input Flow 10A
Power Feed Modules for Output Current Path	
EP-7641	Power Module, 1 Channel 24Vdc Output Flow 10A
Safe Feed-input Modules	
EP-1901	1 Safe Feed-Input, 24 Vdc
EP-1902	2 Safe Feed-Inputs, 24 Vdc, Programmable Delay
EP-1922	2 Safe Feed-Inputs, 24 Vdc
Potential Distribution Modules	
EP-711F	Power Module, 16 Channels 24Vdc Potential Distribution +24 Vdc from Input Current Path
EP-751F	Power Module, 16 Channels 24Vdc Potential Distribution +24 Vdc from Output Current Path
EP-700F	Power Module, 16 Channels 24Vdc Potential Distribution Functional Earth
EP-710F	Power Module, 16 Channels 24Vdc Potential Distribution +0Vdc from Input Current Path
EP-750F	Power Module, 16 Channels 24Vdc Potential Distribution +0Vdc from Output Current Path

4.2 PROFINET IRT/RT Network Adapter EPXPNS001/EPXPNS101

The EPXPNS001 PROFINET Scanner is a PROFINET I/O device certified by the PROFINET user organization.

The EPXPNS101 PROFINET Scanner is a PROFINET I/O device supporting Type S1 PROFINET Simplex and Type S2 PROFINET System redundancy.

The network adapter is the head-end module for the RSTi-EP system bus, to which up to 64 active RSTi-EP modules can be connected. The PROFINET network adapter has two Ethernet ports, and an integrated switch.

The PROFINET Scanner can be accessed with a system-independent web server application via the USB service interface or the Ethernet. Thus, all information, such as diagnostics, status values and parameters, can be read and all connected modules can be simulated or forced.

The station's main power supply is integrated in the PROFINET Scanner. Power is supplied via two 4-pole connectors, separated into the input and output current paths.

Figure 23: Network Adapter EPXPNS001/EPXPNS101

4.2.1 LEDs

Figure 24:LED Status Indicators EPXPNS001/EPXPNS101

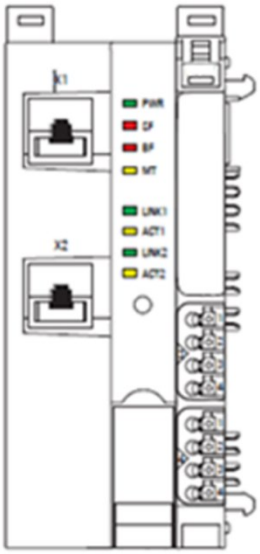

LED Status Indicators EPXPNS001/ EPXPNS101

LED	Indication	LED State/Description
PWR	Power LED	**Green:** Supply voltage connected
SF	System fault	**Red:** Configuration error, or error in the PROFINET Scanner, or error in a module, or there is a new diagnostic report **Red flashing:** Station in Force mode
BF	Bus fault	**Red:** No connection to the fieldbus **Red flashing:** Configuration error, no connection to the control unit, or error in the parameter set
MT	Maintenance Required	**Yellow**: Error on the system bus or the fieldbus
LINK 1	Connection	**Green:** Connection established between port 1 of the PROFINET Scanner and another field device
ACT 1	Active	**Yellow flashing:** Data being exchanged on port 1
LINK 2	Connection	**Green:** Connection established between port 2 of the PROFINET Scanner and another field device
ACT 2	Active	**Yellow flashing:** Data being exchanged on port 2

LED Indicators

LED	EPXPNS001/ EPXPNS101
Power Supply	**Green:** Supply voltage > 18Vdc **Red:** At least one current path < 18 V
3.1	**Green:** Input current path supply voltage > 18Vdc
3.2	**Red:** Input current path supply voltage < 18Vdc
3.3	
3.4	**Red:** Internal fuse defective
4.1	**Green:** Output current path supply voltage > 18Vdc
4.2	**Red:** Output current path supply voltage < 18Vdc
4.3	
4.4	**Red:** Internal fuse defective

For error messages, refer to Section 12, LED Indicators and Troubleshooting.

4.2.2 Connection Diagrams

Figure 25: Connection Diagram EXPNS001/EXPNS101

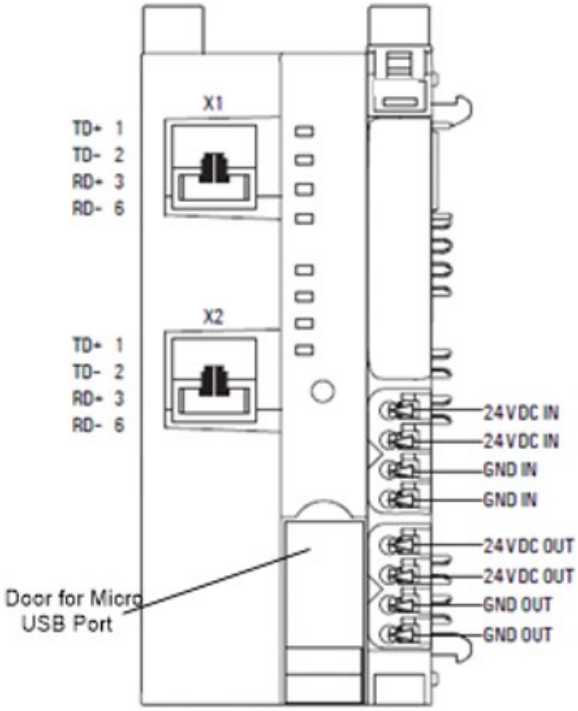

⚠ CAUTION

⚠ In case of a maximum power supply of >8 A and a maximum temperature of > +55°C (131 °F), all four contacts must be connected with 1.5 mm² wiring.

Figure 26: Block Diagram EPXPN Specifications: EPXPNS001/ EPXPNS101

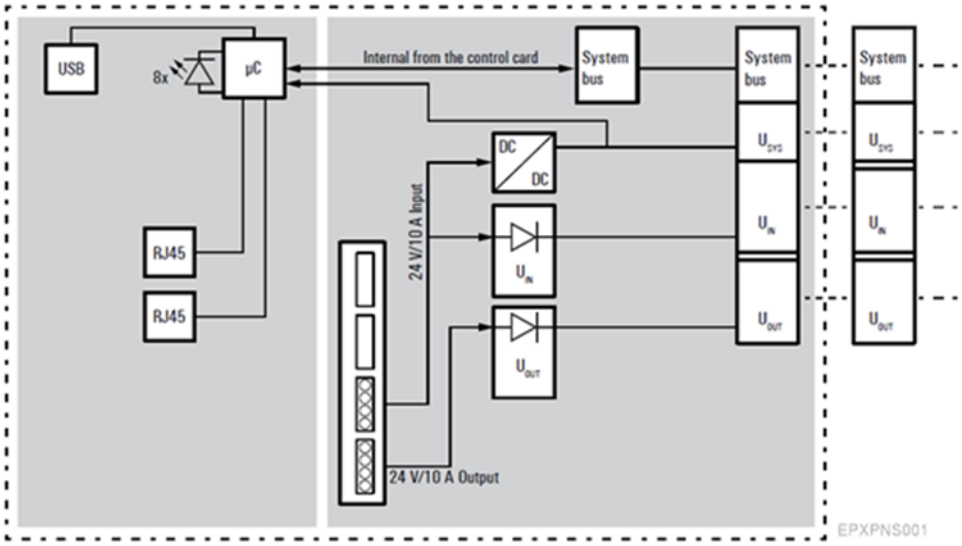

4.2.3 Specification: EPXPNS001/EPXPNS101

Specification	Description	
System data		
Connection	2 x RJ-45	
Fieldbus protocol	PROFINET Version 2.3 Class C I/O Device (IRT, RT)	
PROFINET System Redundancy Support	Not supported	
Application Relations Supported	1 Simplex AR	
Process image	Input data width	max. 512 bytes
	Output data width	max. 512 bytes
	Parameter data	max. 4362 bytes
	Diagnostic data	max. 1408 bytes
Number of modules	max. 64 active	
Configuration interface	Micro USB 2.0	
Transfer rate	Fieldbus	Max. 100 Mbps
	RTSi-EP system bus	Max. 48 Mbps
Fast start-up	< 500ms	With a maximum of 10 modules
Data format	Default: Motorola	Configurable: Intel
Status Bits	16 Input Status Bits Refer --Network Adaptor Input Status Data	
PROFINET I/O Update Rate	Configurable selections: 1ms, 2ms, 4ms, 8ms, 16ms, 32ms, 64ms, 128ms, 256ms and 512ms	
Supports MRP	Yes * [Minimum I/O Update Rate for bumpless operation in an MRP ring topology is 32ms and slower for EPXPNS001]	
Supply		
Supply voltage for system and inputs	20.4V – 28.8V	
Supply voltage for outputs	20.4V – 28.8V	
Max. feed-in current for input modules	10 A	
Max. feed-in current for output modules	10 A	
Current consumption from system current path I_{SYS}	116 mA	
Connection data		
Type of connection	*Spring style*	
Conductor cross-section	Single-wired, fine-wired	0.14 – 1.5 mm^2 (AWG 26 – 16)
General data		
Operating temperature	-20°C to +60°C (-4 °F to +140 °F)	
Storage temperature	-40°C to +85°C (-40 °F to +185 °F)	
Air humidity (operation/transport)	5% to 95%, noncondensing as per DIN EN 61131-2	
Width	52 mm (2.05 in)	
Depth	76 mm (2.99 in)	
Height	120 mm (4.72 in)	
Weight	220 g (7.76 oz)	
Configuration	The V2.3 GSDML file is available on the Support https://www.emerson.com/Industrial-Automation-Controls/support for download and import into PAC Machine Edition. The GSDML supporting a firmware release is part of the firmware upgrade kit, also available on the Support website.	

Specification: EPXPNS101

Specification	Description	
System data		
Connection	2 x RJ-45	
Fieldbus protocol	PROFINET Version 2.3 Class C I/O Device (RT Only)	
PROFINET System Redundancy Support	Redundantly controlled operation conforms to PROFINET V2.3 Type S-2 System Redundancy	
Application Relations Supported	1 Simplex AR or 1 SR-AR set made of 2 SR-ARs [Software Configurable Simplex or HSB CPU Redundancy]	
Process image	Input data width	max. 512 bytes
	Output data width	max. 512 bytes
	Parameter data	max. 4362 bytes
	Diagnostic data	max. 1408 bytes
Number of modules	max. 64 active	
Configuration interface	Micro USB 2.0	
Transfer rate	Fieldbus	Max. 100 Mbps
	RTSi-EP system bus	Max. 48 Mbps
Data format	Default: Motorola	Configurable: Intel
Status Bits	16 Input Status Bits Refer -Network Adaptor Input Status Data	
PROFINET I/O Update Rate	Configurable selections: 1ms, 2ms, 4ms, 8ms, 16ms, 32ms, 64ms, 128ms, 256ms and 512ms	
Supports MRP	Yes * [Minimum I/O Update Rate for bumpless operation in an MRP ring topology is 16ms and slower for EPXPNS101]	
Supply		
Supply voltage for system and inputs	20.4V – 28.8V	
Supply voltage for outputs	20.4V – 28.8V	
Max. feed-in current for input modules	10 A	
Max. feed-in current for output modules	10 A	
Current consumption from system current path ISYS	116 mA	
Connection data		
Type of connection	Spring style	
Conductor cross-section	Single-wired, fine-wired	0.14 – 1.5 mm2 (AWG 26 – 16)
General data		
Operating temperature	-20°C to +60°C (-4 °F to +140 °F)	
Storage temperature	-40°C to +85°C (-40 °F to +185 °F)	
Air humidity (operation/transport)	5% to 95%, noncondensing as per DIN EN 61131-2	
General data		
Width	52 mm (2.05 in)	
Depth	76 mm (2.99 in)	
Height	120 mm (4.72 in)	
Weight	220 g (7.76 oz)	
Configuration	V2.3 GSDML file is available on the Support website https://www.emerson.com/Industrial-Automation-Controls/support for download and import into PAC Machine Edition. The GSDML supporting a firmware release is part of the firmware upgrade kit available on the Support website.	

4.2.4 Modifiable Parameters: EPXPNS001/EPXPNS101

Parameter	Optional values	Default
IP address†	4 numbers between 0 and 255	
Subnet mask	4 numbers between 0 and 255	
Gateway	4 numbers between 0 and 255	
Webserver via Ethernet	disabled / enabled	disabled
IP address USB port	192.168.1.202; 192.168.2.202, 192.168.3.202, 192.168.4.202, 192.168.5.202	192.168.1.202
Process alarm	disabled / enabled	disabled
Diagnostic alarm	disabled / enabled	disabled
Type of diagnostic	Extended channel diagnostic (short diagnostic) Manufacturer-specific diagnostic (complete diagnostic)	Extended channel diagnostic (short diagnostic)
Behavior of outputs on fieldbus errors	All outputs off / Enable substitute value / Hold last value	All outputs off
Module behavior on hot swap	Continue data exchange / Behavior like fieldbus error	Continue data exchange
Data format	Motorola / Intel	Motorola
Lock force mode	Force mode unlocked / Force mode locked	Force mode unlocked
Option Handling@	disabled / enabled	disabled
Group Module Diagnostic Alarm@	disabled / enabled	disabled
Reduce Return of Submodule Alarm@	disabled / enabled	disabled

† Change requires restart of the network adapter.
@ These parameters added from revisions: EPXPNS001-ABAE and EPXPNS101-AAAA.

4.2.5 Network Adaptor Input Status Data

The PROFINET Network Adaptor provides 16 bits of input status data. The application program in the IO Controller system can monitor the input status bits. The PROFINET Network Adaptor provides 16 bits of input status provide information about the scanner alongside the I/O module data. All status bits are active high.

The GSDML provides two options for IO-Device addition in configuration: -

1. EPXPNS001/EPXPNS101 [PROFINET SCANNER]
2. EPXPNS001/EPXPNS101 [PROFNET SCANNER] with Status Word

For getting the input status data, the user need to select "EPXPNS001/EPXPNS101 [PROFNET SCANNER] with Status Word" option while adding the IO-Device in the configurator.

Status Bit #	Name	Description
0	Summarized module diagnosis	A value of 1 indicates that module diagnostic is present. A diagnosis is available for at least one module with diagnostics functionality.
1	Error bit 1	Not Used
2	Error bit 2	Not Used
3	System bus error	A value of 1 indicates error on the system bus. Communication with the connected modules is disrupted.
4	Port1 Link Up	1 = port is connected to another device and is operating correctly. 0 = port is not connected to another device, or the port has some sort of error preventing communications.
5	Port2 Link Up	
6	I/O Configuration error	A value of 1 indicates that there is deviation in the configuration OR the module list has changed OR the list of configured modules differs from the module list detected by the Network Adaptor
7	Master Configuration error	A value of 1 indicates Master configuration error. The list of configured modules differs significantly from the module list detected by the adapter. No process data can be exchanged with the modules.
8	MRP Enable	Media redundancy is enabled.
9	MRP Role	MRP role 0=client, 1= manager. The PROFINET adapter supports only the client role
10	Force mode active	A value of 1 indicates that Web server force mode is active -–Force mode was activated through the web server, Process data cannot be exchanged between the PLC and forced channels.
11	Error bit 11	Not Used
12	Error bit 12	Not Used
13	Voltage Vout Error	A value of 1 indicates error in the supply voltage of outputs
14	Voltage Vin Error	A value of 1 indicates error in the supply voltage of system and inputs
15	Error bit 15	Not Used

4.2.6 Hot Standby CPU Redundancy I/O Parameters (EPXPNS101)

The “Redundancy” tab selects if the PNS is redundantly controlled. The RSTi-EP PNS (EPXPNS101) supports PROFINET System Redundancy when it is configured in an HSB CPU Redundancy system. The Programmer automatically selects redundant control if user sets the “Redundancy” parameter to “HSB CPU Redundancy”.

Figure 27

Redundancy | IO-Device Access Point | Media Redundancy | General Parameters | GSDML Details

Parameters	Values
Redundancy Mode	HSB CPU Redundancy

When the PNS is not configured in an HSB CPU Redundancy system, the Programmer automatically selects simplex operation (non- redundant control) by setting the “Redundancy Mode” parameter to “None”.

If desired, the user may configure a redundancy-capable PNS within an HSB CPU Redundancy system for simplex operation (non-redundant control) by changing the “Redundancy Mode” parameter on the Redundancy tab form “HSB CPU Redundancy” to “None”.

Refer to the PACSystems Hot Standby CPU Redundancy User’’ Manual, GFK-2308G or later, for detailed information on setting up a Hot Standby Redundancy system.

Transfer List

All redundantly controlled I/O must be included in the CPU’’ I/O transfer list. Note that once the HSB CPU Redundancy Mode is set, PAC Machine Edition automatically expands the Primary CPU’’ input transfer list to include all redundantly controlled PROFINET inputs as reference addresses are being assigned. PAC Machine Edition also automatically expands the Primary CPU’’ output transfer list to include all redundantly controlled PROFINET outputs.

The configuration should be stored to both the Primary and Secondary racks before attempting to control any I/O in the RSTi-EP PNS.

Changing a Redundant PNS Configuration

Changes to the device’’ configuration on either the Primary while the Secondary is running or the Secondary while the Primary is running will cause a Loss of Device I/O fault on the controller that is being updated. The controller with the changed configuration will be prevented from re-connecting as long as a non-matching connection exists with the device from any controller.

4.2.7 RSTi-EP PROFINET Channel Diagnostic Alarm Reporting

RSTi-EP PROFINET channel specific diagnostic alarms, generally described as, "Diagnostic Alarms" are fault messages associated with a channel or I/O point. Diagnostic alarms are always transferred acyclically over the PROFINET Network using record data communications over the Non Real Time (NRT) channel to the PROFINET Controller, which then formats the diagnostic alarms for entry into the appropriate PACSystems fault table in the CPU. The diagnostic alarms can be configured to be reported in different data formats depending upon what information is most important to the user's application. This section elaborates about,

a) Extended Channel Specific Diagnostic Alarm Format:-When configured specific channel fault information is updated under "Fault type" as a user readable text in IO fault table.
b) Vendor Specific Diagnostic Alarm Format:- When configured, generic text "Manufacturer Specific Diagnosis" is shown in "Fault Type". Additional, data is provided as part of "Fault Extra Data" which needs to be decoded as shown below.

Extended Channel Specific Diagnostics represents the fault in readable text format. Vendor specific Diagnostics faults provides only first 21 bytes of module diagnostic information as part of extra fault Data in IO fault table for PAC controllers & this information should be decoded so that user can program the logic accordingly. Vendor specific diagnostics may provide 47 bytes of Diagnostic information with other Controllers.

Note: Settings for Individual channels needs to be enabled under "General Parameters" Tab for enabling the diagnostics reporting to the controller. All the Channel specific diagnostic alarm fault entries in IO fault table can be read using SVC_REQ20 & can be reported to HMI as well.

The list of RSTi-EP modules that support Channel Level Diagonstics are:

- EP-1813
- EP-3264
- EP-3468
- EP-3664
- EP-3704
- EP-3804
- EP-4264
- EP-5111
- EP-5112
- EP-5324

Extended Channel Specific Diagnostic Alarm Format

In order to enable Extended Channel Diagnostics, Diagnostic Alarms must be enabled on the Network Adapter as well as for each channel from which the user wishes to receive Diagnostic Alarms. To enable Extended Channel Diagnostics in the Network Adapter settings, under the General Parameters tab, the user must set "Diagnostic Alarm" as "enabled," and "Type of Diagnostic" as "Extended Channel Diagnostic". Once enabled, Extended Channel Specific Diagnostic Alarm messages will appear in the IO fault Table

Figure 28: Network Adapter Diagnostic option-Extended Channel Specific Diagnostic

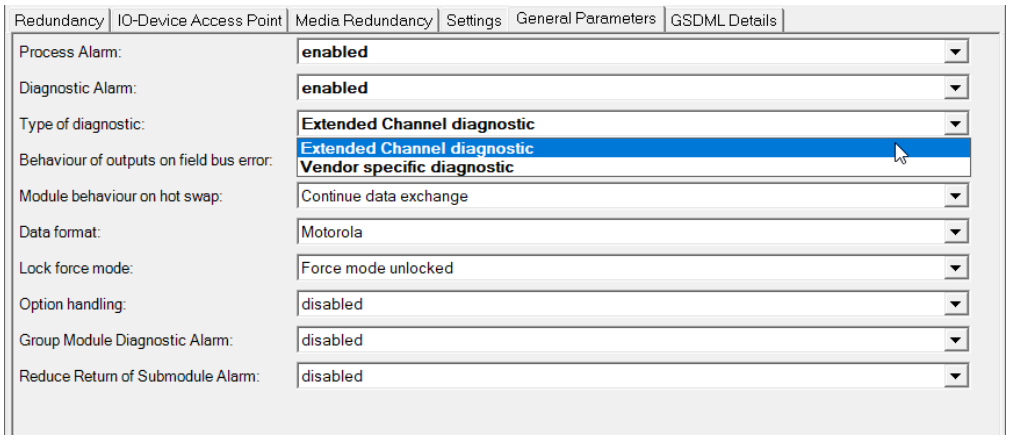

The list below indicates the channel specific diagnostic alarms that may be reported when Extended Channel Specifc Diagnostics are enabled:

- Overload: error will be reported when overload is detected in the IO channel.
- Line break sensor supply: error will be reported when Sensor cable is disconnected from the channel.
- External short-circuit: error will be reported when there is a short on the Power supply of the channel.
- Line-break signal: error will be reported when Sensor cable is disconnected from the channel.
- Lower limit exceeded- error will be reported when the Sensosor Input\Output value is lower than the threshold.
- Upper limit exceeded- error will be reported when the Sensosor Input\Output value is Higher than the threshold.
- Process alarm lost-This
- Short Circuit:- error wil be reported when there is a short on the Power supply of the channel.
- Undervoltage:- error will be reported when there is a under voltage on the supply of the channel.
- Overvoltage: error will be reported when there is a Over voltage on the supply of the channel.
- Overtemperature:- error will be reported when there is a over tempaerature caused on the internal component of the channel
- Power supply fault:-error will be reported when external power supply is not connected to node.
- Parameter Error: will be reported when any error occurs in the configuration of the module.

Note: Few of the alarms can be enabled or disabled in the configuration under "General Parameters" tab of the module & some of the alarms are by default enabled in the module itself and are not available for configuration

For example, suppose there is an RSTi-EP node connected & configured by a PACSystems PROFINET Controller and the RSTi-EP node consists of one EP-3264 (4 channel Analog Input) and one EP-4264 (4 channel Analog Output Module). The EP-3264 module is connected to an analog sensor as shown in the figure below. On the PROFINET Network Adapter, "Extended Channel Specific Diagnostics" are "enabled". On the channel of EP-3264 module, "Diagnostic Alarms" are "enabled".

Figure 29: EP-3264 3-wire Connection Diagram

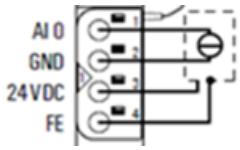

Now if sensor supply “AI 0” signal is disconnected from the connector of the EP-3264,an “Extended Channel Specific Diagnostics, Diagnosis Appears” will be recorded in IO Fault Table as “Fault Category” & “Line Break" will be recorded as “Fault Type”.

Figure 30: IO Fault table Description- Extended Channel Specific Diagnostics

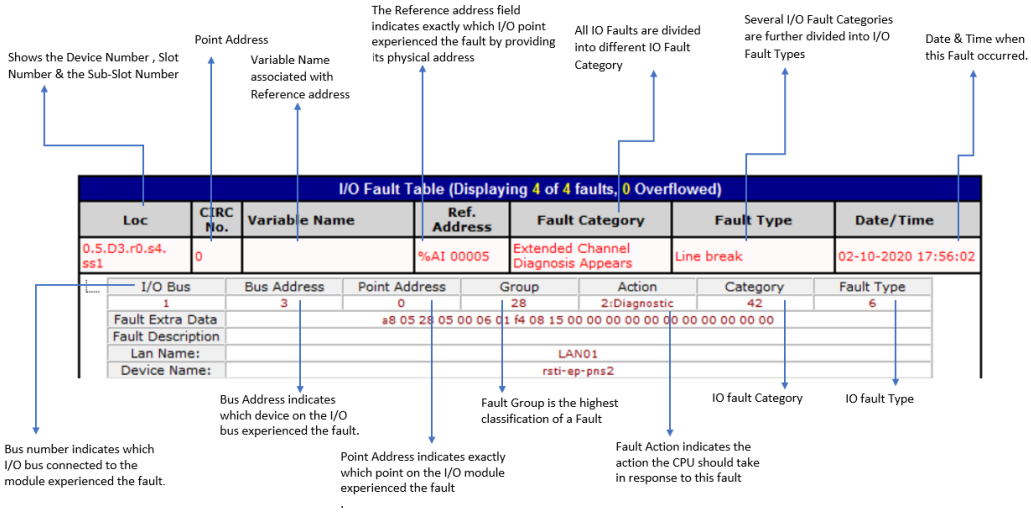

As shown in figure, 21 bytes of Fault Extra Data is provided in IO Fault table as a part of Extended Channel Diagnostic Data.
The data displayed for Alarm Specifier, Channel Properties, Channel Error type, Extended Channel error type, Extended Channel Address vaule, Extra Data & Maintenance Status are based on Standard PROFINET protocol specifications.

In this example, the decoding of the Fault Extra Data is as follows:
a8 05 28 05 00 06 01 f4 08 15 00 00 00 00 00 00 00 00 00 00

Fault Extra Data Bytes	Value in HEX	Field Name
0	a8	Alarm Specifier
1	05	
2	28	Channel Properties
3	05	
4	00	Channel Error Type
5	06	
6	01	Extended Channel Error Type
7	f4	
8	08	Extended Channel Address Value
9	15	

Fault Extra Data Bytes	Value in HEX	Field Name
10	00	
11	00	
12	00	Extra Data
13	00	
14	00	
15	00	
16	00	
17	00	Maintenance Status
18	00	
19	00	
20	00	

Now if sensor supply “AI 0” is repaired or re-connected back to EP-3264, a Extended Channel Specific Diagnostics, Diagnosis Disappears: Line break Fault message will be recorded in the IO Fault Table.

Figure 31: IO Fault table-Line Break PROFINET Fault Disappears

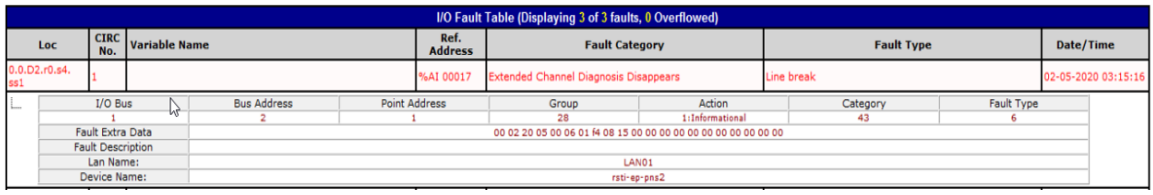

I/O Fault Table (Displaying 3 of 3 faults, 0 Overflowed)

Loc	CIRC No.	Variable Name	Ref. Address	Fault Category	Fault Type	Date/Time
0.0.D2.r0.s4.ss1	1		%AI 00017	Extended Channel Diagnosis Disappears	Line break	02-05-2020 03:15:16

I/O Bus	Bus Address	Point Address	Group	Action	Category	Fault Type
1	2	1	28	1:Informational	43	6

Fault Extra Data	00 02 20 05 00 06 01 f4 08 15 00 00 00 00 00 00 00 00 00 00
Fault Description	
Lan Name:	LAN01
Device Name:	rsti-ep-pns2

Vendor Specific Diagnostics Alarms

In order to enable Vendor Specific Diagnostic Alarms, “Diagnostic Alarms” must be enabled on the Network Adapter as well as for each channel from which the user wishes to receive “Diagnostic Alarms”. To enable “Vendor Specific Diagnostic Alarms” in the Network Adapater settings, under the General Parameters tab, the user must set “Diagnostic Alarm” as “enabled,” and “Type of Diagnostic” as “Vendor Specific Diagnostic Alarms”. Once enabled, Extended Channel Specific Diagnostic Alarm messages will appear in the IO fault Table

Figure 32: Network Adapter Diagnostic option-Vendor Specific Diagnostic

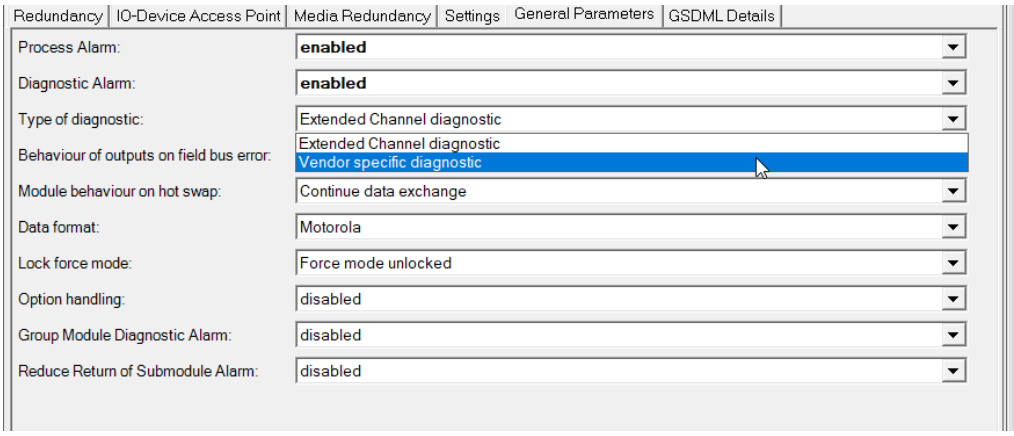

The list of RSTi-EP modules that support Channel Level Diagonstics are:

- EP-3264
- EP-3468
- EP-3664
- EP-3704
- EP-3804
- EP-4264
- EP-5111
- EP-5112
- EP-5261

The diagnostic alarms appear in PAC Machine Edition-> IO fault Tables. If Network Adapter is configured as Vendor Specific Diagnostic, the fault table shows Fault category as Manufacturer Specific Diagnosis & 17 bytes of Extra Fault Data is provided in IO fault table.

Note: Settings for Individual channels needs to be enabled under “General Parameters” Tab for enabling the diagnostics reporting to the controller. All the Channel specific diagnostic alarm fault entries in IO fault table can be read using SVC_REQ20 & can be reported to HMI as well.

For Example, RSTi-EP node is connected & configured with PLC controller & RSTi-EP node consists of EP-3264 (4 channel Analog Input) & EP-4264 (4 channel Analog Output Module). EP-3264 module is connected with AI Sensor Channel specific diagnostics are enabled. On the PROFINET Network adapter, Vendor Specific Diagnostics is enabled.

Figure 33: IO Fault Table-Vendor Specific Diagnostics

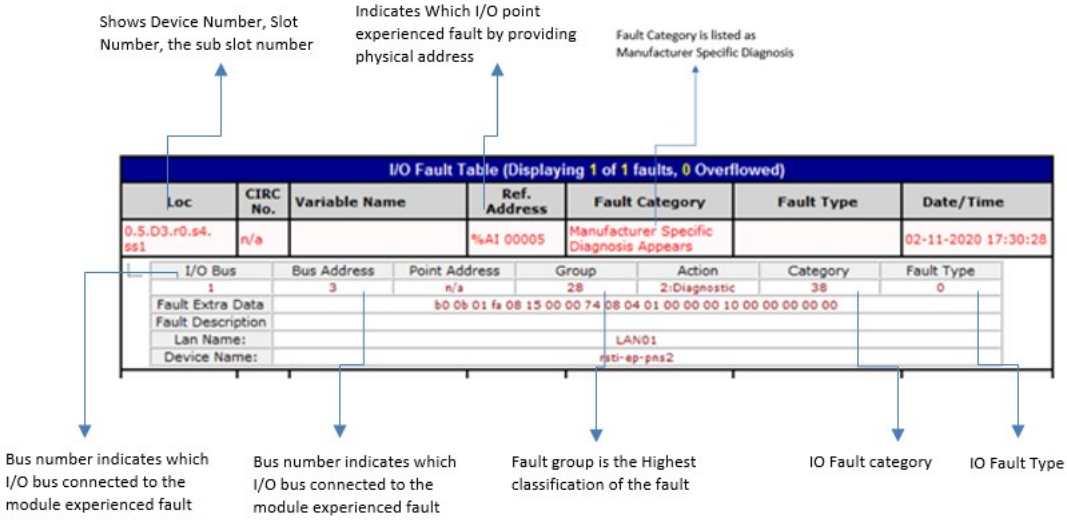

As shown in above figure, 17 bytes of Fault Extra Data is provided in IO Fault table as a part of Vendor Specific Diagnostic Data.

For Example, as per the above shown picture the extra Fault Data is
a8 05 28 05 00 06 01 f4 08 15 00 00 00 00 00 00 00 00 00 00 00

Fault Extra Data Byte	Value in HEX	Field Name	Description
0	B0	Alarm Specifier	PROFNET Header bytes, as per standard PROFINET specifications
1	0B		
2	01	User structure identifier	
3	FA		
4	08	Error indicator:	Manufacturer Diagnostic data: byte 0, For example, IO Module EP-3264 byte1 represents error indicator Error indicator, 0: 0 Module error 1 Internal error 2 External error 3 Channel error 4 Error 5 Power supply fault 6 Reserved 0 7 Parameter error bit 3 = 1 → Channel error
5	15	Module type:	Manufacturer Diagnostic data: byte 1, For example, EP-3264 byte2 refers to Module Type

<table>
<tr><th>Fault Extra Data Byte</th><th>Value in HEX</th><th>Field Name</th><th>Description</th></tr>
<tr><td></td><td></td><td></td><td>low nibble = 0x05 , high nibble = 0x01
<table>
<tr><td rowspan="8">Module type</td><td rowspan="8">1</td><td>0</td><td rowspan="4">Module Type</td><td rowspan="4">0x05</td></tr>
<tr><td>1</td></tr>
<tr><td>2</td></tr>
<tr><td>3</td></tr>
<tr><td>4</td><td>Channel information available</td><td>1</td></tr>
<tr><td>5</td><td>Reserved</td><td>0</td></tr>
<tr><td>6</td><td>Reserved</td><td>0</td></tr>
<tr><td>7</td><td>Reserved</td><td>0</td></tr>
</table></td></tr>
<tr><td>6</td><td>00</td><td>Error byte 2</td><td>Manufacturer Diagnostic data: byte 3, For example, EP-3264 byte2 refers to error byte 2 which is reserved to 0.
<table>
<tr><td>Error byte 2</td><td>2</td><td>0-7</td><td>Reserved</td><td>0</td></tr>
</table></td></tr>
<tr><td>7</td><td>00</td><td>Error byte 3</td><td>Manufacturer Diagnostic data: byte 3, For example, EP-3264 byte3 refers to error byte 3 which is reserved to 0.
<table>
<tr><td rowspan="4">Error byte 3</td><td rowspan="4">3</td><td>0-2</td><td>Reserved</td><td>0</td></tr>
<tr><td>3</td><td>Internal diagnostic FIFO full</td><td></td></tr>
<tr><td>4</td><td>Power supply fault</td><td></td></tr>
<tr><td>5-7</td><td>Reserved</td><td>0</td></tr>
</table></td></tr>
<tr><td>8</td><td>74</td><td>Channel type</td><td>Manufacturer Diagnostic data: byte 4, For example, EP-3264 byte5 refers to Channel Type wherein EP-3264 channel Type is 0x74
<table>
<tr><td rowspan="2">Channel type</td><td rowspan="2">4</td><td>0-6</td><td>Channel type</td><td>0x74</td></tr>
<tr><td>7</td><td>Reserved</td><td>0</td></tr>
</table></td></tr>
<tr><td>9</td><td>08</td><td>Diagnostic bits per channel</td><td>Manufacturer Diagnostic data: byte 5, For example, EP-3264 byte6 refers to number of Diagnostic bits per Channel which is 8.
<table>
<tr><td>Diagnostic bits per channel</td><td>5</td><td></td><td>Number of diagnostic bit per channel</td><td>8</td></tr>
</table></td></tr>
<tr><td>10</td><td>04</td><td>Number of channels:</td><td>Manufacturer Diagnostic data: byte 6, For example, EP-3264 byte7 refers to number of channels, as per the above example the value is 04, therefore number of channels are 4.
<table>
<tr><td>Number of channels</td><td>6</td><td></td><td>Number of similar channels per module</td><td>4</td></tr>
</table></td></tr>
<tr><td>11</td><td>01</td><td>Channel error:</td><td>Manufacturer Diagnostic data: byte 7, For example, EP-3264 byte7 refers to channel error & as per the above said example, the value 01 represents bit0 =1.Therefore, Channel 0 has error.
<table>
<tr><td rowspan="5">Channel error</td><td rowspan="5">7</td><td>0</td><td>Error at channel 0</td><td></td></tr>
<tr><td>1</td><td>Error at channel 1</td><td></td></tr>
<tr><td>2</td><td>Error at channel 2</td><td></td></tr>
<tr><td>3</td><td>Error at channel 3</td><td></td></tr>
<tr><td>4-7</td><td>Reserved</td><td>0</td></tr>
</table></td></tr>
</table>

<table>
<tr><th>Fault Extra Data Byte</th><th>Value in HEX</th><th>Field Name</th><th>Description</th></tr>
<tr><td>12</td><td>00</td><td>Channel error</td><td>Manufacturer Diagnostic data: byte 8, For example, EP-3264 byte 8 refers to channel error & as per the above said example, the value is reserved to 00.
<table>
<tr><td>Channel error</td><td>8</td><td>8-15</td><td>Reserved</td><td>0</td></tr>
</table></td></tr>
<tr><td>13</td><td>00</td><td>Channel error</td><td>Manufacturer Diagnostic data: byte 9, For example, EP-3264 byte 9 refers to channel error & as per the above said example, the value is reserved to 00.
<table>
<tr><td>Channel error</td><td>9</td><td>16-23</td><td>Reserved</td><td>0</td></tr>
</table></td></tr>
<tr><td>14</td><td>00</td><td>Channel error</td><td>Manufacturer Diagnostic data: byte 10, For example, EP-3264 byte 10 refers to channel error & as per the above said example, the value is reserved to 00.
<table>
<tr><td>Channel error</td><td>10</td><td>24-31</td><td>Reserved</td><td>0</td></tr>
</table></td></tr>
<tr><td>15</td><td>10</td><td>Channel 0 error:</td><td>Manufacturer Diagnostic data: byte 11,for example EP-3264 byte11 refers to channel 0 error & as per the above said example, the value is 10.i.e, Bit4 =1, which indicates Line Break signal
<table>
<tr><th>Name</th><th>Bytes</th><th>Bit</th><th>Description</th><th>Default</th></tr>
<tr><td rowspan="8">Channel 0 error</td><td rowspan="8">11</td><td>0</td><td>Parameter error</td><td></td></tr>
<tr><td>1</td><td>Overload</td><td></td></tr>
<tr><td>2</td><td>Line break sensor supply</td><td></td></tr>
<tr><td>3</td><td>Fuse blown</td><td></td></tr>
<tr><td>4</td><td>Line break signal</td><td></td></tr>
<tr><td>5</td><td>Reserved</td><td>0</td></tr>
<tr><td>6</td><td>Lower limit exceeded</td><td></td></tr>
<tr><td>7</td><td>Upper limit exceeded</td><td></td></tr>
</table></td></tr>
<tr><td>16</td><td>00</td><td>Channel 1 error:</td><td>Manufacturer Diagnostic data: byte 12,for example EP-3264 byte12 refers to channel 1 error & as per the above said example, the value is 10.i.e, Bit4 =1, which indicates Line Break signal
<table>
<tr><td rowspan="8">Channel 1 error</td><td rowspan="8">12</td><td>0</td><td>Parameter Error</td><td></td></tr>
<tr><td>1</td><td>Overload</td><td></td></tr>
<tr><td>2</td><td>Line break sensor supply</td><td></td></tr>
<tr><td>3</td><td>Fuse blown</td><td></td></tr>
<tr><td>4</td><td>Line break signal</td><td></td></tr>
<tr><td>5</td><td>Reserved</td><td>0</td></tr>
<tr><td>6</td><td>Lower limit exceeded</td><td></td></tr>
<tr><td>7</td><td>Upper limit exceeded</td><td></td></tr>
</table></td></tr>
</table>

<table>
<tr><th>Fault Extra Data Byte</th><th>Value in HEX</th><th>Field Name</th><th>Description</th></tr>
<tr><td>17</td><td>00</td><td>Channel 2 error:</td><td>Maintenance Diagnostic data: byte 14, refer Module specific Diagnostic data
<table>
<tr><td rowspan="8">Channel 2 error</td><td rowspan="8">13</td><td>0</td><td>Parameter Error</td><td></td></tr>
<tr><td>1</td><td>Overload</td><td></td></tr>
<tr><td>2</td><td>Line break sensor supply</td><td></td></tr>
<tr><td>3</td><td>Fuse blown</td><td></td></tr>
<tr><td>4</td><td>Line break signal</td><td></td></tr>
<tr><td>5</td><td>Reserved</td><td>0</td></tr>
<tr><td>6</td><td>Lower limit exceeded</td><td></td></tr>
<tr><td>7</td><td>Upper limit exceeded</td><td></td></tr>
</table></td></tr>
<tr><td>18</td><td>00</td><td>Channel 3 error:</td><td>Maintenance Diagnostic data: byte 15, refer Module specific Diagnostic data
<table>
<tr><td rowspan="8">Channel 3 error</td><td rowspan="8">14</td><td>0</td><td>Parameter Error</td><td></td></tr>
<tr><td>1</td><td>Overload</td><td></td></tr>
<tr><td>2</td><td>Line break sensor supply</td><td></td></tr>
<tr><td>3</td><td>Fuse blown</td><td></td></tr>
<tr><td>4</td><td>Line break signal</td><td></td></tr>
<tr><td>5</td><td>Reserved</td><td>0</td></tr>
<tr><td>6</td><td>Lower limit exceeded</td><td></td></tr>
<tr><td>7</td><td>Upper limit exceeded</td><td></td></tr>
</table></td></tr>
<tr><td>19</td><td>00</td><td>Channel 4 error</td><td>Maintenance Diagnostic data: byte 16, refer Module specific Diagnostic data
<table>
<tr><td>Channel 4 error
to
Channel 31 error</td><td>15 - 42</td><td>0 - 7</td><td>Reserved</td><td>0</td></tr>
</table></td></tr>
<tr><td>20</td><td>00</td><td>Channel 5 error</td><td>Maintenance Diagnostic data: byte 17,

For EP-3264, BYTE17 refers to the Channel5 error.
<table>
<tr><td>Channel 4 error
to
Channel 31 error</td><td>15 - 42</td><td>0 - 7</td><td>Reserved</td><td>0</td></tr>
</table></td></tr>
</table>

Similar to this, refer to respective Module specific diagonstics for other IO modules.

Now, Now if Sensor supply “AI 0” is re-connected back to EP-3264, Line break Fault disappears message is shown in IO fault table.

Figure 34: IO Fault table-Line Break PROFINET Fault Disappears

I/O Fault Table (Displaying 2 of 2 faults, 0 Overflowed)

Loc	CIRC No.	Variable Name	Ref. Address	Fault Category	Fault Type	Date/Time
0.0.D2.r0.s4.ss1	n/a		%AI 00017	Manufacturer Specific Diagnosis Disappears		02-05-2020 03:21:03

I/O Bus	Bus Address	Point Address	Group	Action	Category	Fault Type
1	2	n/a	28	1:Informational	39	0
Fault Extra Data	00 02 01 fa 08 15 00 00 74 08 04 02 00 00 00 00 10 00 00 00 00					
Fault Description						
Lan Name:	LAN01					
Device Name:	rsti-ep-pns2					

Similarly other faults such as Parameter Error, Overload, Line break sensor supply, External short-circuit, Line, break signal, Lower limit exceeded, Upper limit exceeded,etc.can be obtained from fault extra data.

4.2.8 Supported Modules and Power Supplies

The following modules can be used with the current release of the RSTi-EP PROFINET Network Adaptor:

Catalog Number	Module Description
Digital Input Modules	
EP-1214	Digital Input, 4 Points, Positive Logic 24Vdc, 2-, 3-, or 4-Wire
EP-1218	Digital Input, 8 Points, Positive Logic, 24Vdc 2-Wire
EP-1318	Digital Input, 8 Points, Positive Logic, 24Vdc 3-Wire
EP-125F	Digital Input, 16 Points, Positive Logic, 24Vdc, 1-Wire
EP-12F4	Digital Input, 4 Points, Positive Logic 24Vdc, 2-, 3-, or 4-Wire, Time stamp
EP-153F	Digital Input, 16 Points, Negative Logic, 24Vdc, 1-Wire
EP-1804	Digital Input, 4 Points 110/230Vac (65 – 277Vac), 2-Wire, Isolated
Digital Output Modules	
EP-2214	Digital Output, 4 Points, Positive Logic 24Vdc, 0.5A, 2-, 3-, or 4-Wire
EP-2614	Digital Output, 4 Points, Positive Logic 24Vdc, 2.0A, 2-, 3-, or 4-Wire
EP-2634	Digital Output, 4 Points, Positive/Negative Logic 24Vdc, 2.0A, 2-, 3-, or 4-Wire
EP-2218	Digital Output, 8 Points, Positive Logic, 24Vdc, 0.5A, 2-Wire
EP-225F	Digital Output, 16 Points, Positive Logic, 24Vdc, 0.5A, 1-Wire
EP-291F	Digital Output, 16 Points, Negative Logic, 24Vdc, 1-Wire
Digital Relay Output Modules	
EP-2714	Digital Relay Output, 4 Points, Positive Logic, 24 -–220 Vdc/Vac, 6A, 2-Wire
EP-2814	Solid-state Relay Output Module
Analog Input Modules	
EP-3164	Analog Input, 4 Channels Voltage/Current 16 Bits 2-, 3-, or 4-Wire
EP-3264	Analog Input, 4 Channels Voltage/Current 16 Bits with Diagnostics 2-, 3-, or 4-Wire
EP-3664	Analog Input, 4 Channels Voltage/ Current 16 Bits with Diagnostics 2-, 3-, or 4-Wire, Differential
EP-3124	Analog Input, 4 Channels Voltage/Current 12 Bits 2-, 3-, or 4-Wire
EP-3368	Analog Input, 8 Channels Current 16 Bits 2-, 3-, or 4-Wire
EP-3468	Analog Input, 8 Channels Current 16 Bits 2-, 3-, or 4-Wire, Channel Diagnostic
EP-3704	Analog Input, 4 Channels RTD 16 Bits with Diagnostics 2-, 3-, or 4-Wire
EP-3804	Analog Input, 4 Channels TC 16 Bits with Diagnostics 2-, 3-, or 4-Wire
EP-1813	Power Measurement Module, 8 Channels
Analog Output Modules	
EP-4164	Analog Output, 4 Channels Voltage/Current 16 Bits 2-, 3-, or 4-Wire
EP-4264	Analog Output, 4 Channels Voltage/Current 16 Bits with Diagnostics 2-, 3-, or 4-Wire
Specialty Modules	
EP-5111	1 Channel High Speed Counter, AB 100 kHz 1 DO 24Vdc, 0.5A
EP-5112	2 Channel High Speed Counter, AB 100 kHz
EP-5212	2 Channel Frequency Measurement, 100 kHz
EP-5261	1 Channel Serial Communications, 232, 422, 485
EP-5311	1 Channel SSI Encoder, BCD or Gray-Code Format, 5/24 Vdc
EP-5422	2 Channels PWM Output, Positive Logic, 24Vdc, 0.5 A
EP-5442	2 Channels PWM Output, Positive Logic, 24Vdc, 2 A

Catalog Number	Module Description
EP-5324	IO-Link Communication module, 4 Channels
Power Feed Modules for Input Current Path	
EP-7631	Power Module, 1 Channel 24Vdc Input Flow 10A
Power Feed Modules for Output Current Path	
EP-7641	Power Module, 1 Channel 24Vdc Output Flow 10A
Safe Feed-input Modules	
EP-1901	1 Safe Feed-Input, 24 Vdc
EP-1902	2 Safe Feed-Inputs, 24 Vdc, Programmable Delay
EP-1922	2 Safe Feed-Inputs, 24 Vdc
Potential Distribution Modules	
EP-711F	Power Module, 16 Channels 24Vdc Potential Distribution +24 Vdc from Input Current Path
EP-751F	Power Module, 16 Channels 24Vdc Potential Distribution +24 Vdc from Output Current Path
EP-700F	Power Module, 16 Channels 24Vdc Potential Distribution Functional Earth
EP-710F	Power Module, 16 Channels 24Vdc Potential Distribution +0Vdc from Input Current Path
EP-750F	Power Module, 16 Channels 24Vdc Potential Distribution +0Vdc from Output Current Path

4.3 EtherCAT® Network Adapter EPXETC001

Figure 35: EPXETC001

The EPXETC001 network adapter is an EtherCAT[2] device certified by the EtherCAT Technology Group. The network adapter is the head module for the RSTi-EP system bus, to which up to 64 active RSTi-EP modules can be connected. The EtherCAT network adapter has two Ethernet ports and an integrated switch.

The network adapter can be accessed with a system-independent web server application via the USB service interface or the EtherCAT. Thus, all information, such as diagnostics, status values and parameters, can be read and all connected modules can be simulated or forced.

The station's main power supply is integrated in the network adapter. Power is supplied via two 4-pole connectors, separated into the input and output current paths.

[2] EtherCAT® is registered trademark and patented technology, licensed by Beckhoff Automation GmbH, Germany

Figure 36: Network Adapter EPXETC001

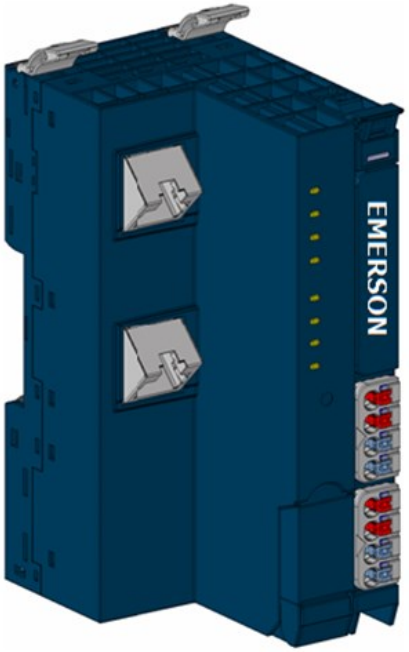

4.3.1 LEDs

Figure 37: LED Status Indicators

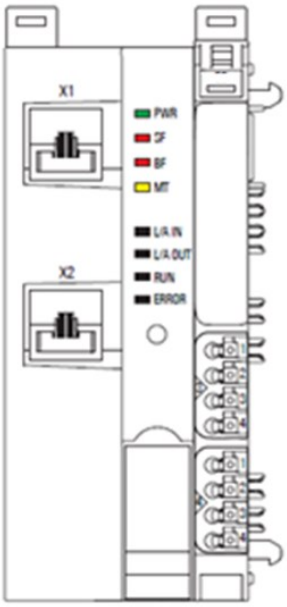

LED	Indication	LED State/Description
PWR	Power LED	**Green**: Supply voltage connected
SF	System Fault	**Red**: Configuration error, or error in the network adapter, or error in a module, or there is a new diagnostic report Red flashing: Station in Force mode
BF	Bus fault	**Red**: No connection to the fieldbus **Red flashing**: Configuration error, no connection to the control unit, or error in the parameter set
MT	Maintenance Required	**Yellow**: Error on the system bus or fieldbus
L/A IN	Connection/Activity	**Green**: Connection established between port 1 of the network adapter and another field device **Green flashing**: Data being exchanged on port 1
LA OUT	Connection/Activity	**Green**: Connection established between port 2 of the network adapter and another field device **Green flashing**: Data being exchanged on port 2
RUN	Network adapter state	**Off**: INIT **Green flashing**: PRE-OPERATIONAL **Green lights up briefly**: SAFE-OPERATIONAL **Green**: OPERATIONAL
ERROR	Internal error	**Red**: Critical error in the network adapter **Red lights up briefly**: Error in network adapter application **Red briefly lights up twice**: Output Syncmanager Watchdog expired **Red flashing**: Configuration error

LED Indicators

LED	EPXETC001
Power Supply	**Green**: Supply voltage > 18Vdc **Red**: At least one current path < 18 V
3.1	**Green**: Input current path supply voltage > 18Vdc
3.2	**Red**: Input current path supply voltage < 18Vdc
3.3	
3.4	**Red**: Internal fuse defective
4.1	**Green**: Output current path supply voltage > 18Vdc
4.2	**Red**: Output current path supply voltage < 18Vdc
4.3	
4.4	**Red**: Internal fuse defective

For error messages, refer to Section 12, LED Indicators and Troubleshooting.

4.3.2 Connection Diagrams

Figure 38: Connection Diagram EPXETC001

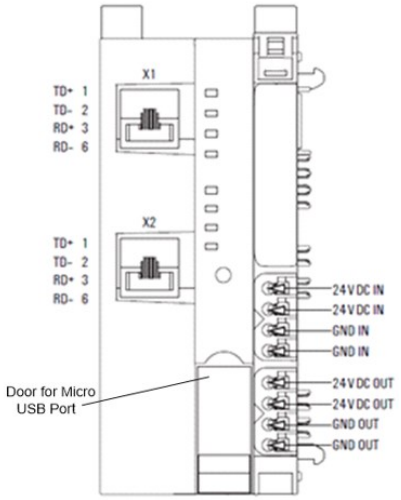

⚠CAUTION

In case of a maximum power supply of >8 A and a maximum temperature of > +55°C (131 °F), all four contacts must be connected with 1.5 mm² wiring.

Figure 39: Block Diagram EPXETC001

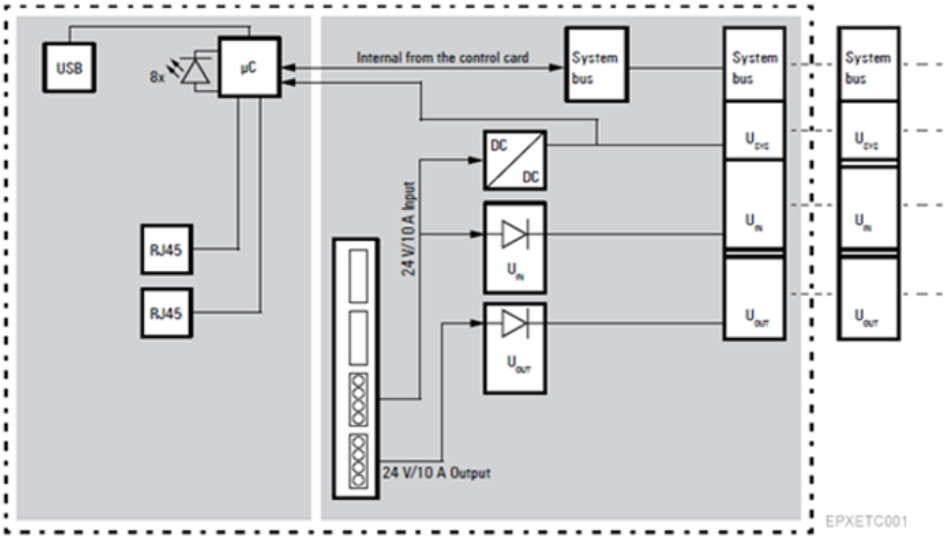

4.3.3 Specifications: EPXETC001

Specifications	Description	
System data		
Connection	2 x RJ-45	
Fieldbus protocol	EtherCAT	
Process image	Process data	max. 1024 bytes
	Parameter data	max. 64*64 = 4 KB
	Diagnostic data	max. 64*50 = 3200 bytes
Number of modules	max. 64 active	
Configuration interface	Micro USB 2.0	
Transfer rate	Fieldbus	Max. 100 Mbps
	RTSi-EP system bus	Max. 48 Mbps
Supply		
Supply voltage for system and inputs	20.4V – 28.8V	
Supply voltage for outputs	20.4V – 28.8V	
Max. feed-in current for input modules	10 A	
Max. feed-in current for output modules	10 A	
Current consumption from system current path I_{SYS}	110 mA	
Connection data		
Type of connection	*Spring style*	
Conductor cross-section	Single-wired, fine-wired	0.14 – 1.5 mm² (AWG 26 – 16)
General data		

Specifications	Description
Operating temperature	-20°C to +60°C (-4 °F to +140 °F)
Storage temperature	-40°C to +85°C (-40 °F to +185 °F)
Air humidity (operation/transport)	5% to 95%, noncondensing as per IEC 61131-2
Width	52 mm (2.05 in)
Depth	76 mm (2.99 in)
Height	120 mm (4.72 in)
Weight	227 g (8 oz)
Configuration	ESI file is available on the *Support* website https://www.emerson.com/Industrial-Automation-Controls/support for download and import into Programmer Tool which supports EtherCAT. The ESI supporting a firmware release is part of the firmware upgrade kit, also available on the *Support* website.

4.3.4 Modifiable Parameters for EPXETC001

Parameter	Optional values	Default
IP address USB port†	192.168.1.202; 192.168.2.202, 192.168.3.202, 192.168.4.202, 192.168.5.202	192.168.1.202
Process alarm	disabled / enabled	disabled
Diagnostic	disabled / enabled	disabled
Behavior of outputs on fieldbus error	All outputs off / Enable substitute value/ Hold last value	All outputs off
Module behavior on hot swap	Continue data exchange / Behavior like fieldbus error	Continue data exchange
Data format	Motorola / Intel	Motorola
Webserver via Ethernet	disabled / enabled / enabled	disabled / enabled
Adapter control	Reserved	Off
† Change requires restart of the network adapter.		

4.3.5 RSTi-EP Status Messages

In addition to the process input data a network adapter status word as well as module status bytes are transferred to the SPS. Thus, diagnostics and status messages can be read directly.

The network adapter status word describes the status of the RSTi-EP station including the following information:

Network Adapter Status Bits EPXETC001

Bit	Name	Description
0	Summarized module diagnosis	Module diagnostic is present. A diagnosis is available for at least one module with diagnostics functionality.
1	Errorbit 1	Reserve bit 1, currently not used
2	Errorbit 2	Reserve bit 2, currently not used

Bit	Name	Description
3	System bus error	Error on the system bus. Communication with the connected modules is disrupted.
4	Errorbit 4	Reserve bit 4, currently not used
5	Errorbit 5	Reserve bit 5, currently not used
6	I/O-Configuration error	Deviation in the configuration. The module list has changed. The list of configured modules (Configured Module Ident List 0xF030) differs from the module list detected by the network adapter (Detected Module Ident List 0xF050).
7	Master configuration error	Master configuration error. The list of configured modules (Configured Module Ident List 0xF030) differs significantly from the module list detected by the network adapter (Detected Module Ident List 0xF050). No process data can be exchanged with the modules. The station switches into PRE- OPERATIONAL state.
8	Errorbit 8	Reserve bit 8, currently not used
9	Errorbit 9	Reserve bit 9, currently not used
10	Force mode active	Web server Force mode is active. Force mode was activated through the web server. Process data cannot be exchanged between the EtherCAT master and forced channels.
11	Errorbit 11	Reserve bit 11, currently not used
12	Errorbit 12	Reserve bit 12, currently not used
13	Voltage U_{OUT} error	Error in the supply voltage of outputs
14	Voltage U_{IN} error	Error in the supply voltage of system and inputs
15	Errorbit 15	Reserve bit 15, currently not used

4.3.6 Module Status Messages

A module status byte is added to each module's process data (with the exception of safe I/O modules). It describes the status of the module including the following information:

Module Status Messages in an EPXETC001 Station

Status value	Meaning
0x0	Plug-in station is undefined
0x1	Plug-in station = module OK
0x80	Plug-in station empty, module has been removed
0x81	Incorrect module plugged in

4.3.7 Module Diagnosis

The network adapter`s status word reveals whether there is a module diagnosis. The history of the module diagnosis can be interrogated via object 0x10F3. A ring buffer stores 20 diagnosis so that the current diagnosis overwrites the oldest one (sub-index 06 to 19).

Figure 40: History of Module Diagnosis as Shown in TwinCat

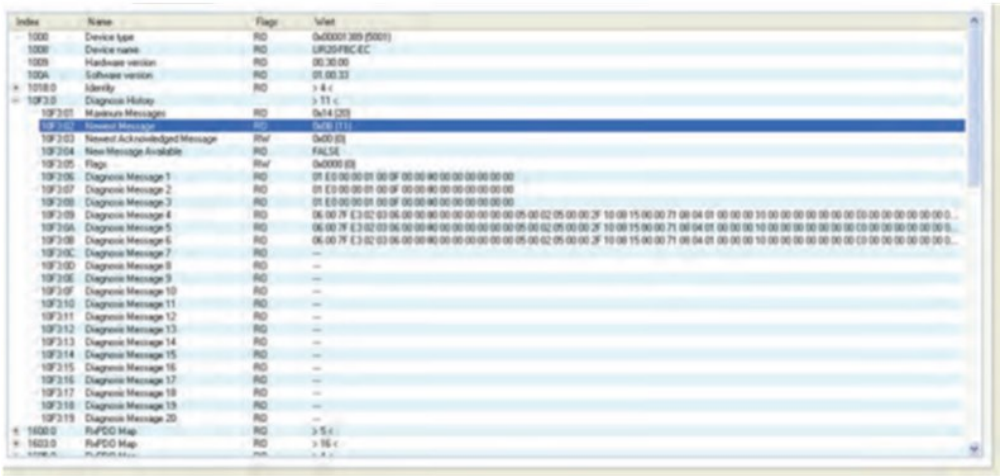

4.3.8 Supported Modules and Power Supplies

The following modules can be used with the current release of the RSTi-EP EtherCAT Network Adaptor:

Catalog Number	Module Description
Digital Input Modules	
EP-1214	Digital Input, 4 Points, Positive Logic 24Vdc, 2-, 3-, or 4-Wire
EP-1218	Digital Input, 8 Points, Positive Logic, 24Vdc 2-Wire
EP-1318	Digital Input, 8 Points, Positive Logic, 24Vdc 3-Wire
EP-125F	Digital Input, 16 Points, Positive Logic, 24Vdc, 1-Wire
EP-12F4	Digital Input, 4 Points, Positive Logic 24Vdc, 2-, 3-, or 4-Wire, Time stamp
EP-153F	Digital Input, 16 Points, Negative Logic, 24Vdc, 1-Wire
EP-1804	Digital Input, 4 Points 110/230Vac (65 – 277Vac), 2-Wire, Isolated
Digital Output Modules	
EP-2214	Digital Output, 4 Points, Positive Logic 24Vdc, 0.5A, 2-, 3-, or 4-Wire
EP-2614	Digital Output, 4 Points, Positive Logic 24Vdc, 2.0A, 2-, 3-, or 4-Wire
EP-2634	Digital Output, 4 Points, Positive/Negative Logic 24Vdc, 2.0A, 2-, 3-, or 4-Wire
EP-2218	Digital Output, 8 Points, Positive Logic, 24Vdc, 0.5A, 2-Wire
EP-225F	Digital Output, 16 Points, Positive Logic, 24Vdc, 0.5A, 1-Wire
EP-291F	Digital Output, 16 Points, Negative Logic, 24Vdc, 1-Wire
Digital Relay Output Modules	
EP-2714	Digital Relay Output, 4 Points, Positive Logic, 24 - 220 Vdc/Vac, 6A, 2-Wire
EP-2814	Solid-state Relay Output Module
Analog Input Modules	
EP-3164	Analog Input, 4 Channels Voltage/Current 16 Bits 2-, 3-, or 4-Wire
EP-3264	Analog Input, 4 Channels Voltage/Current 16 Bits with Diagnostics 2-, 3-, or 4-Wire
EP-3664	Analog Input, 4 Channels Voltage/ Current 16 Bits with Diagnostics 2-, 3-, or 4-Wire, Differential
EP-3124	Analog Input, 4 Channels Voltage/Current 12 Bits 2-, 3-, or 4-Wire

Catalog Number	Module Description
EP-3368	Analog Input, 8 Channels Current 16 Bits 2-, 3-, or 4-Wire
EP-3468	Analog Input, 8 Channels Current 16 Bits 2-, 3-, or 4-Wire, Channel Diagnostic
EP-3704	Analog Input, 4 Channels RTD 16 Bits with Diagnostics 2-, 3-, or 4-Wire
EP-3804	Analog Input, 4 Channels TC 16 Bits with Diagnostics 2-, 3-, or 4-Wire
EP-1813	Power Measurement Module, 8 Channels
Analog Output Modules	
EP-4164	Analog Output, 4 Channels Voltage/Current 16 Bits 2-, 3-, or 4-Wire
EP-4264	Analog Output, 4 Channels Voltage/Current 16 Bits with Diagnostics 2-, 3-, or 4-Wire
Specialty Modules	
EP-5111	1 Channel High Speed Counter, AB 100 kHz 1 DO 24Vdc, 0.5A
EP-5112	2 Channel High Speed Counter, AB 100 kHz
EP-5212	2 Channel Frequency Measurement, 100 kHz
EP-5261	1 Channel Serial Communications, 232, 422, 485
EP-5311	1 Channel SSI Encoder, BCD or Gray-Code Format, 5/24 Vdc
EP-5422	2 Channels PWM Output, Positive Logic, 24Vdc, 0.5 A
EP-5442	2 Channels PWM Output, Positive Logic, 24Vdc, 2 A
EP-5324	IO-Link Communication module, 4 Channels
Power Feed Modules for Input Current Path	
EP-7631	Power Module, 1 Channel 24Vdc Input Flow 10A
Power Feed Modules for Output Current Path	
EP-7641	Power Module, 1 Channel 24Vdc Output Flow 10A
Safe Feed-input Modules	
EP-1901	1 Safe Feed-Input, 24 Vdc
EP-1902	2 Safe Feed-Inputs, 24 Vdc, Programmable Delay
EP-1922	2 Safe Feed-Inputs, 24 Vdc
Potential Distribution Modules	
EP-711F	Power Module, 16 Channels 24Vdc Potential Distribution +24Vdc from Input Current Path
EP-751F	Power Module, 16 Channels 24Vdc Potential Distribution +24Vdc from Output Current Path
EP-700F	Power Module, 16 Channels 24Vdc Potential Distribution Functional Earth
EP-710F	Power Module, 16 Channels 24Vdc Potential Distribution +0Vdc from Input Current Path
EP-750F	Power Module, 16 Channels 24Vdc Potential Distribution +0Vdc from Output Current Path

4.4 Modbus®TCP Network Adapter EPXMBE001/EPXMBE101

The EPXMBE001 network adapter is a Modbus TCP participant developed according to IEC 61158. The network adapter is the head module for the RSTi-EP communication bus, to which up to 64 active RSTi-EP modules can be connected. The Modbus TCP network adapter has two Ethernet ports and an integrated switch supporting a line network structure.

The EPXMBE101 network adapter is a variant of EPXMBE001 network adaptor, which supports “Modbus Dual LAN mode” of operation. In this mode of operation, both the Ethernet ports communicate with two separate networks. For this purpose, the EPXMBE101 has two MAC addresses and two IP addresses that can be defined separately over two different LAN networks. The “Modbus Dual LAN mode” is suitable to communicate with two synchronized control units simultaneously. Thereby both the control units have the complete read and write access. If the “Modbus Dual LAN mode” is disabled in EPXMBE101, the network adaptor functions as EPXMBE001 with a single LAN network.

The network adapter can be accessed with a system-independent web server application via the USB service interface or the Ethernet. Thus, all information, such as diagnostics, status values and parameters, can be read and all connectedmodules can be simulated or forced.

The station's main power supply is integrated in the network adapter. Power is supplied via two 4-pole connectors, separated into the input and output current paths.

Figure 41: Network Adapter EPXMBE001/EPXMBE101

4.4.1 LEDs

Figure 42: LED Status Indicators EPXMBE001/EPXMBE101

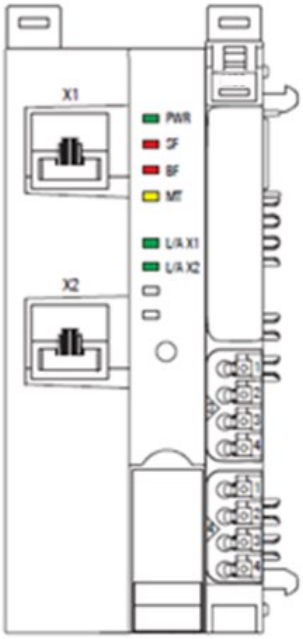

LED Status Indicators

LED	Indication	LED State/Description
PWR	Power LED	**Green:** Supply voltage connected
SF	System Fault	**Red**: Configuration error, or error in the network adapter, or error in a module, or there is a new diagnostic report **Red flashing:** Station in Force mode
BF	Bus fault	**Red**: No connection to the fieldbus **Red flashing**: Configuration error, no connection to the control unit, or error in the parameter set
MT	Maintenance Required	**Yellow**: Error on the system bus or fieldbus
L/A X1	Connection/Active	**Green / Yellow**†: Connection established between port 1 of the network adapter and another field device Green flashing / Yellow flashing†: Data being exchanged on port 1
L/A X2	Connection/Active	**Green**: Connection established between port 2 of the network adapter and another field device **Green flashing**: Data being exchanged on port 2
†**Green**: Transfer rate 100 Mbps **Yellow**: Transfer rate 10 Mbps		

LED Indicators

LED	EPXMBE001/EPXMBE101
Power Supply	**Green:** Supply voltage > 18Vdc **Red:** At least one current path < 18 V
3.1	**Green:** Input current path supply voltage > 18Vdc
3.2	**Red:** Input current path supply voltage < 18Vdc
3.3	
3.4	**Red:** Internal fuse defective
4.1	**Green:** Output current path supply voltage > 18Vdc
4.2	**Red:** Output current path supply voltage < 18Vdc
4.3	
4.4	**Red:** Internal fuse defective

For error messages, refer to Section 12, LED Indicators and Troubleshooting.

4.4.2 Connection Diagrams

Figure 43: Connection Diagram EPXMBE001/EPXMBE101

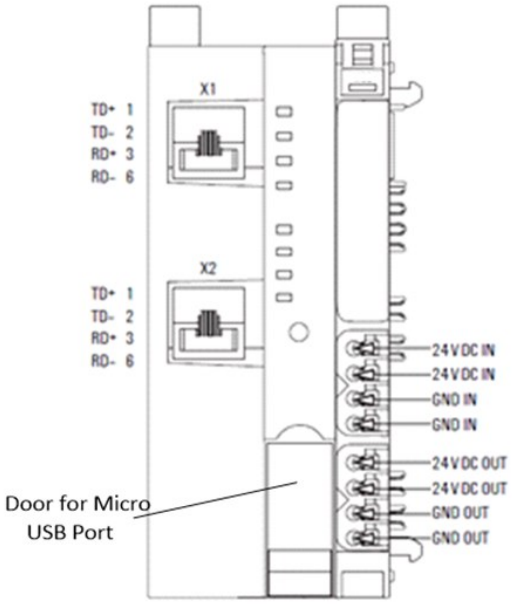

⚠CAUTION

In case of a maximum power supply of >8 A and a maximum temperature of > +55°C (131 °F), all four contacts must be connected with 1.5 mm² wiring.

Figure 44: Block Diagram EPXMBE001/EPXMBE101

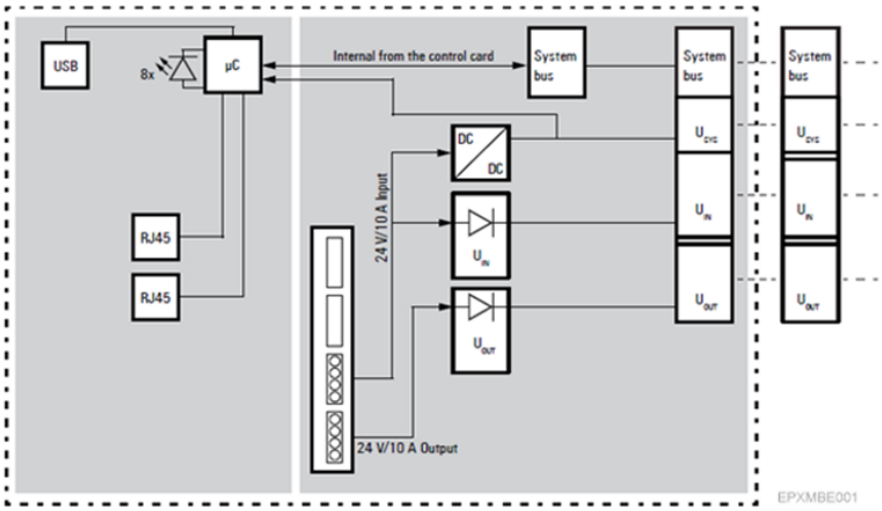

4.4.3 Specifications: EPXMBE001/EPXMBE101

Specification	Description	
System data		
Connection	2 x RJ-45	
Fieldbus protocol	Modbus TCP	
Process image	Process Data	max. 1024 Bytes
	Parameter data	max. 1024 Bytes
	Diagnostic data	max. 1024 Bytes
Number of modules	max. 64 active	
Configuration interface	Micro USB 2.0	
Transfer rate	Fieldbus	10 Mbps/100 Mbps
	RTSi-EP system bus	Max. 48 Mbps
Supply		
Supply voltage for system and inputs	20.4V – 28.8V	
Supply voltage for outputs	20.4V – 28.8V	
Max. feed-in current for input modules	10 A	
Max. feed-in current for output modules	10 A	
Current consumption from system current path ISYS	112 mA	
Connection data		
Type of connection	Spring style	
Conductor cross-section	Single-wired, fine-wired	0.14 – 1.5 mm2 (AWG 26 – 16)
General data		
Operating temperature	-20°C to +60°C (-4 °F to +140 °F)	

Specification	Description
Storage temperature	-40°C to +85°C (-40 °F to +185 °F)
Air humidity (operation/transport)	5% to 95%, noncondensing as per IEC 61131-2
Width	52 mm (2.05 in)
Depth	76 mm (2.99 in)
Height	120 mm (4.72 in)
Weight	223 g (7.87 oz)

4.4.4 Configuration of the IP Address

The web server can be used to define whether a static IP address shall be used, or the address shall be assigned automatically (DHCP/BootP).

Network adapters using firmware version 01.xx.xx are preset to the static IP address 192.168.0.222.

Network adapters using firmware version 02.00.00 or higher will by default send a DHCP discover first. If no assignment by a DHCP server follows during the next 30 seconds, the static IP address 192.168.0.222 will be set.

4.4.5 Modifiable Parameters for EPXMBE001/EPXMBE101

Parameter	Optional values	Default
IP-Address#	4 numbers between 0-255	192.168.0.222
Subnet mask#	4 numbers between 0-255	255.255.255.0
Gateway#	4 numbers between 0-255	192.168.0.1
IP Configuration#	Static, DHCP, BootP	DHCP and static
MODBUS DHCP Timeout	Waiting time, 1 to 1,000 s	30 s
Additional TCP port[1]	0 (disabled) / Value from 1 to 65,535† (except for 80 and 161)	0
Modbus Dual LAN Mode (EPXMBE101 only) †	disabled / enabled	disabled
IP-Address USB Port†	192.168.1.202; 192.168.2.202, 192.168.3.202, 192.168.4.202, 192.168.5.202	192.168.1.202
Webserver via Ethernet†	disabled / enabled	disabled
Save module parameters[2]	no / yes / Standard	no, refer to register 0x113C – 0x113F Save Module Parameters
Status Modbus watchdog	Watchdog time in steps of 10ms	0 *10ms, refer to register 0x1120 MODBUS DATA EXCHANGE watchdog, predefined time
Modbus Connection Timeout	Connection watchdog time in sec	1 s, refer to register 0x1131 MODBUS CONNECTION Timeout in Sec
Write access in multi-client operation	write for all, 1stWr1stServe, 1stConn1stServe	write for all, refer to register 0x1031 MODBUS CONNECTION Mode Register
Check reference list before exchanging data	disabled / enabled	disabled, refer to register 0x1132 Check Reference List prior to Data Exchange
Process alarm	disabled / enabled	refer to register 0x1133 Process Alarm
Diagnostic alarm	disabled / enabled	refer to register 0x1134 Diagnostic Alarm

Parameter	Optional values	Default
Behavior of outputs on fieldbus error	All outputs off / Enable substitute values / Hold last value	All outputs off, refer to register 0x1135 Field Bus or Reference List Error Behavior
Module behavior on hot swap	Continue data exchange / Behavior like fieldbus error	Continue data exchange, refer to register 0x1136 Module Removal Behavior
Data format	Motorola / Intel	Motorola, refer to register 0x1137 Data Format
Lock force mode	Force mode unlocked / Force mode locked	Force mode unlocked, refer to register General Contact Information
† Change requires restart of the network adapter. # In Dual LAN Mode (EPXMBE101 only) parameterizable for each Ethernet Port on the Module		

[1] Parameter "Additional TCP port"

Another TCP port additionally to the standard port (502) can be enabled using this parameter. Apart from the values 80 (reserved for http) and 161 (reserved for SNMP) every number from 1 to 65,535 can be used. Value 0 deactivates the port. The standard port 502 will remain open in any case.

[2] Parameter "Save module parameters" in the web server

The choice Yes or Standard cannot be displayed in the web server, caused by the data structure of this parameter. The display will be reset to No anytime.

Option Yes: The current image of all module parameters is saved in the network adapter and will be sent to the modules again during the Network adapter's next restart. Subsequent changes of the module parameters are considered and saved only if the option Yes will be chosen again.

Option Standard: The default parameters will be loaded to the modules immediately. Subsequent changes of the module parameters are possible, but they will get loss during the network adapter's next restart.

Parameter "Restore module parameters"

This parameter is non-modifiable. It will be automatically set to Yes as soon as the network adapter will have sent saved parameter data to the modules

Register Structure

(ro: read only = input register, rw: read write = holding register, wo: write only = holding register)

Register address (in hex)	Access	Data width	Description	Remarks
0x0000 – 0x01FF	ro	Module-dependent	Packed process data for inputs	byte granularly
0x0800 – 0x09FF	rw	Module-dependent	Packed process data for outputs	byte granularly
0x1000 – x1006	ro	Byte	Network adapter identifier	
0x100C	ro	Word	Network adapter status	Bit assignment as with EPXETC001

Register address (in hex)	Access	Data width	Description	Remarks
0x1010	ro	Word	Process image length in bits for the output modules	
0x1011	ro	Word	Process image length in bits for the input modules	
0x1017	ro	Word	Register mapping revision	
0x1018 – 0x101B	ro	Byte	Collective diagnostics message for I/O modules (1 bit per I/O module)	
0x101C – 0x101F	ro	Byte	Collective process alarm message for I/O modules (1 bit per I/O module)	
0x1028 – 0x102F	ro	Byte	Module status (2 bits per I/O module) 00 = module OK, 01 = module error 10 = incorrect module 11 = module not plugged in	Structure as in PROFIBUS module status
0x1030	ro	Word	MODBUS DATA EXCHANGE watchdog, current time (x*10ms) 0 = watchdog has expired 0xFFFF = watchdog deactivated	Time still remaining for monitoring the exchange of process data
0x1120	rw	Word	MODBUS DATA EXCHANGE watchdog, predefined time (x*10ms), default = 0ms (no watchdog active)	Time for monitoring the exchange of process data
0x1121	rw	Word	MODBUS DATA EXCHANGE watchdog reset register Bit0 = 1: watchdog reset at predefined time Bit8 = 1: restart after expired watchdog	Bit 0: reset watchdog while it is running (retrigger) Bit 8: restart of expired watchdog
0x1122	rw	DWord	Lock of the “Force Mode” via Webserver	LOCK to lock, FREE to unlock
0x1124 – 0x1125	rw	Long	Changing IP Address 1 via Fieldbus	
0x1126 – 0x1127	rw	Long	Changing Subnet Mask 1 via Fieldbus	
0x1128 – 0x1129	rw	Long	Changing Gateway 1 via Fieldbus	
0x1130	rw	Word	MODBUS CONNECTION mode register	
0x1131	rw	Word	MODBUS CONNECTION timeout in sec. Default = 1 (0 not allowed)	
0x1132	rw	Word	Check the reference list before data exchange 0x0000 = disable, 0x0001 = enable	
0x1133	rw	Word	Process alarm 0x0000 = disable, 0x0001 = enable	
0x1134	rw	Word	Diagnostics alarm 0x0000 = disable, 0x0001 = enable	
0x1135	rw	Word	Behavior in case of field bus error and reference list error 0x0000 = all outputs to 0, 0x0001 = set error values 0x0002 = retain process data	

Register address (in hex)	Access	Data width	Description	Remarks
0x1136	rw	Word	Behavior when module removed 0x0000 = process data continues to run 0x0001 = behavior as with field bus error	
0x1137	rw	Word	Data format 0x0000 = Motorola, 0x0001 = Intel	
0x113C – 0x113D	wo	Long	Restore module parameters Motorola =“LOAD”, Intel =“DAOL”	Corresponds to the “DEFAULT” in the web server
0x113E – 0x113F	wo	Long	Save module parameters Motorola =“SAVE”, Intel =“EVAS”	Corresponds to “SAVE” in the web server
0x1140 – 0x1141	rw	Long	Changing IP Address 2 via Fieldbus	These registers only available with EPXMBE101
0x1142 – 0x1143	rw	Long	Changing Subnet Mask 2 via Fieldbus	
0x1144 – 0x1145	rw	Long	Changing Gateway 2 via Fieldbus	
0x27FE	ro	Word	Number of entries in the current module list	
0x27FF	ro	Word	Number of entries in the reference module list	
0x2800 – 0x287F	rw	Long	Reference module list (max. 64 modules per station * 2 registers per module)	There must always be 2, 4, 6 etc. registers transferred
0x2A00 – 0x2A7F	ro	Long	Current module list (max. 64 modules per station * 2 registers per module)	There must always be 2, 4, 6 etc. registers transferred
0x8000 – 0x87FF	ro	Module	Process data inputs (max. 64 modules per station * 32 registers per module)	
0x9000 – 0x97FF	rw	Module	Process data outputs (max. 64 modules per station * 32 registers per module)	
0xA000 – 0xA7FF	ro	Byte	Diagnostics (max. 64 modules per station * 32 registers per module)	Confirmation by readout
0xB000 – 0xB7FF	ro	Byte	Process alarms (max. 64 modules per station * 32 registers per module)	Confirmation by readout
0xC000 - 0xC7FF (Firmware 01.xx.xx) 0xC000 - 0xFFFF (Firmware 02.00.00 or higher	rw	Byte	Module parameters (Firmware 01.xx.xx: max. 64 modules per station * 32 registers per module; Firmware 02.00.00 or higher: max. 64 modules per station * 256 registers per module)	

Note: If the user wants to access the DWORD for EP-5111, EP-5112, EP-5212, EP-5442 and EP-5422 modules use SWAP_DWORD function block.

Implemented Modbus Functions

Function code no.	Function	Description
1	Read Coils	Reading of output bits in the range of 0x0800 – 0x09FF†
2	Read Discrete Inputs	Reading of input bits in the range of 0x0000 – 0x01FF†
3	Read Holding Registers	Reading of multiple holding registers
4	Read Input Registers	Reading of multiple input registers
5	Write Single Coil	Writing of an individual output bit in the range of 0x0800 – 0x09FF†
6	Write Single Registers	Writing of individual holding registers
15	Write Multiple Coils	Writing of output bits in the range of 0x0800 – 0x09FF†
16	Write Multiple Registers	Writing of multiple holding registers
22	Mask Write Register	Bitwise changing of one holding register
23	Read/Write Multiple Registers	Reading of multiple input registers and writing of multiple holding registers simultaneously

†Function codes 1, 2, 5 and 15 for bit-wise access to registers. For the usage of these codes please note:

In MODBUS protocol bit addressing separated from register addressing has not been specified. Bit and register address need to be implemented within the access address as follows: dismiss the most significant digit of the register address, shift the three less significant digits to the left and use the vacant least significant digit for bit addressing.

Example: register access with function code 1 to address 0x80AB would be a read access to register 0x080A bit 11. Therefore, the usage of function codes 1, 2, 5, 15 is limited to the address range of 0x0000 – 0x01FF and 0x0800 – 0x09FF.

4.4.6 Supported Modules and Power Supplies

The following modules can be used with the current release of the RSTi-EP Modbus Network Adaptor:

Part Number	Module Description
Digital Input Modules	
EP-1214	Digital Input, 4 Points, Positive Logic 24Vdc, 2-, 3-, or 4-Wire
EP-1218	Digital Input, 8 Points, Positive Logic, 24Vdc 2-Wire
EP-1318	Digital Input, 8 Points, Positive Logic, 24Vdc 3-Wire
EP-125F	Digital Input, 16 Points, Positive Logic, 24Vdc, 1-Wire
EP-12F4	Digital Input, 4 Points, Positive Logic 24Vdc, 2-, 3-, or 4-Wire, Time stamp
EP-153F	Digital Input, 16 Points, Negative Logic, 24Vdc, 1-Wire
EP-1804	Digital Input, 4 Points 110/230Vac (65 – 277Vac), 2-Wire, Isolated
Digital Output Modules	
EP-2214	Digital Output, 4 Points, Positive Logic 24Vdc, 0.5A, 2-, 3-, or 4-Wire
EP-2614	Digital Output, 4 Points, Positive Logic 24Vdc, 2.0A, 2-, 3-, or 4-Wire
EP-2634	Digital Output, 4 Points, Positive/Negative Logic 24Vdc, 2.0A, 2-, 3-, or 4-Wire

Part Number	Module Description
EP-2218	Digital Output, 8 Points, Positive Logic, 24Vdc, 0.5A, 2-Wire
EP-225F	Digital Output, 16 Points, Positive Logic, 24Vdc, 0.5A, 1-Wire
EP-291F	Digital Output, 16 Points, Negative Logic, 24Vdc, 1-Wire
Digital Relay Output Modules	
EP-2714	Digital Relay Output, 4 Points, Positive Logic, 24 - 220 Vdc/Vac, 6A, 2-Wire
EP-2814	Solid-state Relay Output Module
Analog Input Modules	
EP-3164	Analog Input, 4 Channels Voltage/Current 16 Bits 2-, 3-, or 4-Wire
EP-3264	Analog Input, 4 Channels Voltage/Current 16 Bits with Diagnostics 2-, 3-, or 4-Wire
EP-3664	Analog Input, 4 Channels Voltage/ Current 16 Bits with Diagnostics 2-, 3-, or 4-Wire, Differential
EP-3124	Analog Input, 4 Channels Voltage/Current 12 Bits 2-, 3-, or 4-Wire
EP-3368	Analog Input, 8 Channels Current 16 Bits 2-, 3-, or 4-Wire
EP-3468	Analog Input, 8 Channels Current 16 Bits 2-, 3-, or 4-Wire, Channel Diagnostic
EP-3704	Analog Input, 4 Channels RTD 16 Bits with Diagnostics 2-, 3-, or 4-Wire
EP-3804	Analog Input, 4 Channels TC 16 Bits with Diagnostics 2-, 3-, or 4-Wire
EP-1813	Power Measurement Module, 8 Channels
Analog Output Modules	
EP-4164	Analog Output, 4 Channels Voltage/Current 16 Bits 2-, 3-, or 4-Wire
EP-4264	Analog Output, 4 Channels Voltage/Current 16 Bits with Diagnostics 2-, 3-, or 4-Wire
Specialty Modules	
EP-5111	1 Channel High Speed Counter, AB 100 kHz 1 DO 24Vdc, 0.5A
EP-5112	2 Channel High Speed Counter, AB 100 kHz
EP-5212	2 Channel Frequency Measurement, 100 kHz
EP-5261	1 Channel Serial Communications, 232, 422, 485
EP-5311	1 Channel SSI Encoder, BCD or Gray-Code Format, 5/24 Vdc
EP-5422	2 Channels PWM Output, Positive Logic, 24Vdc, 0.5 A
EP-5442	2 Channels PWM Output, Positive Logic, 24Vdc, 2 A
EP-5324	IO-Link Communication module, 4 Channels
Power Feed Modules for Input Current Path	
EP-7631	Power Module, 1 Channel 24Vdc Input Flow 10A
Power Feed Modules for Output Current Path	
EP-7641	Power Module, 1 Channel 24Vdc Output Flow 10A
Safe Feed-input Modules	
EP-1901	1 Safe Feed-Input, 24 Vdc
EP-1902	2 Safe Feed-Inputs, 24 Vdc, Programmable Delay
EP-1922	2 Safe Feed-Inputs, 24 Vdc
Potential Distribution Modules	
EP-711F	Power Module, 16 Channels 24Vdc Potential Distribution +24Vdc from Input Current Path
EP-751F	Power Module, 16 Channels 24Vdc Potential Distribution +24Vdc from Output Current Path
EP-700F	Power Module, 16 Channels 24Vdc Potential Distribution Functional Earth
EP-710F	Power Module, 16 Channels 24Vdc Potential Distribution +0Vdc from Input Current Path
EP-750F	Power Module, 16 Channels 24Vdc Potential Distribution +0Vdc from Output Current Path

4.4.7 Packed Process Data

Packed input process data

Input register range: 0x0000 to 0x01FF

Note: Access to all 512 registers is always possible regardless of the I/O structure. Unused registers respond with “0”.

Packed output process data

Output register range: 0x0800 to 0x09FF

Note: Access to all 512 registers is always possible regardless of the I/O structure. Unused registers send “0” during a read access, write accesses are ignored.

Structure of packed process data

The byte granularly packed process data contains all input data (register range 0x0000 to 0x01FF) and output data (register range 0x0800 to 0x09FF) of the RSTi-EP station.

Note: The start address(es) of each module’s process data are listed in register 0x2B00 – 0x2B7F (refer to Section 0x2B00 – 0x2B7F Module Offsets of Process Data). Process data is mapped according to how the modules are arranged. To avoid larger gaps in the process data, the different modules should be arranged in an optimal manner.

Example of an Optimal Module Arrangement

Product	Input data	Output data	Number of input registers	Number of output registers	Remarks
EPXMBE001/ EPXMBE101			0	0	
EP-4164	--	4 words	0	4	allocated 4 registers
EP-3164	4 words	--	4	0	allocated 4 registers
EP-1214	1 Byte	--	1	0	allocated 1/2 register low byte (1 byte)
EP-1214	1 Byte	--	0	0	allocated 1/2 register high byte (1 byte)
EP-125F	2 Byte		1		allocated 1 register
EP-153F	2 Byte		1		allocated 1 register
Total			7	4	

Example of an Suboptimal Module Arrangement

Product	Input data	Output data	Number of input registers	Number of output registers	Remarks
EPXMBE001/ EPXMBE101			0	0	
EP-1214	1 Byte	--	1	0	allocated 1 register
EP-4164	--	4 words	0	4	allocated 4 registers
EP-3164	4 words	--	4	0	allocated 4 registers
EP-1214	1 Byte	--	1	0	allocated 1 register
EP-125F	2 Byte		1		allocated 1 register
EP-153F	2 Byte		1		allocated 1 register
Total			8	4	

Data Widths of I/O Modules in the Modbus Register Range

Module	Process data	
	Input	Output
EP-1214	1 Byte	--
EP-1218	1 Byte	--
EP-1318	1 Byte	--
EP-125F	2 Byte	--
EP-12F4	15*(2 Byte, 1 Word)	--
EP-153F	2 Byte	--
EP-2214	--	1 Byte
EP-2614	--	1 Byte
EP-2634	--	1 Byte
EP-2218	--	1 Byte
EP-225F	--	2 Byte
EP-2814	--	1 Byte
EP-2714	--	1 Byte
EP-291F	--	2 Byte
EP-5111	2 DWord, 2 Word	2 DWord, 1 Word
EP-5112	2 DWord, 2 Word	2 DWord, 2 Word
EP-5212	4 DWord, 2 Word	2 DWord, 2 Word
EP-5422	2 Word	2 DWord, 2 Word
EP-5442	2 Word	2 DWord, 2 Word
EP-5324	2 ... 64 Bytes	2 ... 64 Bytes
EP-3164	4 Word	--
EP-3264	4 Word	--
EP-3664	4 Word	--
EP-3124	4 Word	--
EP-3804	4 Word	--
EP-3368	8 Word	--
EP-3468	8 Word	--
EP-4164	--	4 Word
EP-4264	--	4 Word
EP-3704	4 Word	--

Module	Process data	
	Input	Output
EP-1813	8 Word	8 Word
EP-1901	4 Byte	--
EP-1922	4 Byte	--
EP-1902	Byte	--

4.4.8 0x1000 – 0x1006 Network Adapter Identifier

The identifier is the product designation: EPXMBE001 and EPXMBE101 as per Network adaptor Catalog number.

4.4.9 0x1000 – 0x1006 Network Adapter Status

Bit	Name	Meaning
0	Summarized module diagnosis	A diagnosis is available on at least one module with diagnostics functionality.
1	Errorbit 1	Reserve bit 1, currently not used
2	Errorbit 2	Reserve bit 2, currently not used
3	System bus error	Error on system bus. Communication with the connected modules is disrupted.
4	Errorbit 4	Reserve bit 4, currently not used
5	Errorbit 5	Reserve bit 5, currently not used
6	I/O-Configuration error	Differing configuration. The module list has changed. The list of configured modules (reference module list 0x2800 – 0x287F) differs from the module list detected by the network adapter (current module list 0x2A00 – 0x2A7F).
7	Master configuration error	Master configuration error. The list of configured modules (reference module list 0x2800 – 0x287F) differs significantly from the module list detected by the network adapter (current module list 0x2A00 – 0x2A7F). Process data cannot be exchanged with the modules.
8	Errorbit 8	Reserve bit 8, currently not used
9	Errorbit 9	Reserve bit 9, currently not used
10	Force mode active	Force mode was activated via the web server. Forced channels do not exchange data with the master.
11	Errorbit 11	Reserve bit 11, currently not used
12	Errorbit 12	Reserve bit 12, currently not used
13	Voltage UOUT error	Error in the supply voltage of outputs
14	Voltage UIN error	Error in the supply voltage of system and inputs
15	Errorbit 15	Reserve bit 15, currently not used

4.4.10 0x1010 Process Image Length in Bits for the Output Modules

4.4.11 0x1010 Process Image Length in Bits for the Input Modules

4.4.12 0x1017 Register – Mapping Revision

Version of the register structure

4.4.13 0x1018 – 0x101B Collective Diagnostics Message for I/O Modules

If a diagnostic alarm is activated (register 0x1134) and there is a diagnostic message for a module, it is indicated here with a set bit. A module's slot position corresponds to its position in the 64-bit data field (minus passive modules without slot recognition). Example: 0x0000 0000 0000 0002 = There is a diagnostic alarm for module 2.

Reading the module's diagnostic memory (0xAXXX) confirms the diagnosis and resets the corresponding bit. In case of multiple diagnoses for one module, only the most up-to-date diagnosis is displayed. The next diagnostic is then placed in a wait loop and only becomes active once the current one has been confirmed.

4.4.14 0x101C – 0x101F Collective Process Message for I/O Modules

If a process alarm is activated (register 0x1133) and there is an alarm for a module, this is indicated here with a set bit. A module's slot position corresponds to its position in the 64-bit data field (minus passive modules without slot recognition). Example: 0x0000 0000 0000 0002 = There is a process alarm for module 2.

Reading the module's process alarm memory (0xBXXX) confirms the alarm and resets the corresponding bit. In case of multiple process alarms for one module, only the latest alarm is displayed. The next alarm is then placed in a wait loop and only becomes active once the current one has been confirmed.

4.4.15 0x1028 – 0x102F Module Status

The module status (2 bits per module) is displayed in the corresponding bit positions of the 128 bits.

0 0 Valid data from this module

0 1 Invalid data, faulty module

1 0 Invalid data, incorrect module

1 1 Invalid data, missing module

4.4.16 0x1030 MODBUS DATA EXCHANGE Watchdog, Current Time

Amount of time (input value * 10ms) remaining on the active watchdog to monitor the exchange of process data. If a 0 is read, the watchdog has expired and must be restarted.

If 0xFFFF is read, the watchdog is deactivated.

4.4.17 0x1120 MODBUS DATA EXCHANGE watchdog, predefined time

In this register, the watchdog is activated/deactivated, and the watchdog time is set. Process date can be exchanged as long as the watchdog is deactivated, or it is activated and still running. But it is accepted only after a watchdog reset to the current time. The length is calculated with the input value * 10ms. Entering 0 deactivates the watchdog.

4.4.18 0x1121 MODBUS DATA EXCHANGE Watchdog Reset Register

If Bit 0 in this register is set, the predefined time is loaded into the watchdog time (watchdog reset).

If Bit 8 in this register is set, an expired watchdog (value 0 in register 1030) is reactivated.

4.4.19 0x1122 Lock Force Mode on Web Server

In default setting the force mode can be enabled via the web server (after Login). The force mode can be locked by writing the double word ”LOCK“ (0x4C4F, 0x434B). Writing of ”FREE“ (0x4652, 0x4545) will unlock the force mode again.

4.4.20 0x1031 MODBUS CONNECTION Mode Register

Bit	Name/Description
2 to 15	reserved
1	MB_ImmediateWritePermission – 0: during the first write access, write authorization is requested for the corresponding Modbus connection. If this is not successful, an exception response with the exception code 0x01 is generated. If it is successful, the write access is executed and write authorization remains in effect until the end of the connection. – 1: write authorization for the corresponding Modbus connection is already requested when the connection is being established. As a result, the first Modbus connection receives the write authorization, and nothing happens for all those that follow (as long as Bit 0 = 1).
0	MB_OnlyOneWritePermission – 0: all Modbus connections have written authorization – 1: in all cases only one Modbus connection can be assigned write authorization. Once assigned, write authorization is retained until there is a disconnect. After the connection that has write authorization is disconnected, the next connection which attempts write access receives write authorization.

4.4.21 0x1131 MODBUS CONNECTION Timeout in Sec

This register determines how long a Modbus connection must be inactive before it is ended with a disconnect.

4.4.22 0x1132 Check Reference List prior to Data Exchange

If the value in register 0x1132 is set to 0, the data exchange begins without checking the reference module list (0x2800 and the following) against the current module list (0x2A00 and the following). The reference module list must also not be described.

If the value in in register 0x1132 is set to 1, the data exchange only starts if the reference module list (0x2800 and the following) matches the current module list (0x2A00 and the following).

4.4.23 0x1133 Process Alarm

If the value in this register is set to 0, process alarms are reported, but it is not necessary to confirm or read them. If the value in this register is set to 1, process alarms are reported, and they must be confirmed by reading the corresponding register.

4.4.24 0x1134 Diagnostic Alarm

If the value 0 is set in this register, the diagnostic alarm is deactivated. Pending diagnostics do not have any effect on the exchange of process data and must not be confirmed. They are, however, displayed locally on the RSTi-EP hardware with red LEDs (SF and module) and may also be read in the module-specific diagnostic registers 0xAXXX.

If the value in this register is set to 1, diagnostics alarms are reported, and they must be confirmed by reading the corresponding register.

4.4.25 0x1135 Field Bus or Reference List Error Behavior

If the value in this register is set to 0, in case of a field bus or reference list error all outputs are set to 0.

If the value in this register is set to 1, in case of a field bus error all outputs are set to the substitute values.

If the value in this register is set to 2, in case of a field bus error all outputs are held at the last process value.

4.4.26 0x1136 Module Removal Behavior

If the value in this register is set to 0, the exchange of process data continues.

If the value in this register is set to 1, the behavior during a field bus error is used.

4.4.27 0x1137 Data Format

If the value in this register is set to 0, data is transferred in Motorola format.

If the value in this register is set to 1, data is transferred in Intel format.

4.4.28 0x113C – 0x113F Save Module Parameters

Load default module parameters (0x113C – 0x113D) loads the default parameter set of all modules (LOAD). This conforms to the Standard option in the web server.

Save module parameters (0x113E – 0x113F) stores the current image of all module parameters in the network adapter (SAVE). Subsequent changes will not be considered unless they are saved again. There is no need to enter parameters again after restarting the network adapter. This conforms to the Yes option in the web server.

Inputs in both register in the Motorola format follow this scheme:

	“LOAD“				**“SAVE“**			
Letter of the alphabet	L	O	A	D	S	A	V	E
ASCII code decimal	076	079	065	068	083	065	086	069
ASCII hexadecimal	4C	4F	41	44	53	41	56	45
Input in register no.	**0x113C**		**0x113D**		**0x113E**		**0x113F**	
Hexadecimal	4C4F		4144		5341		5645	
Decimal	19535		16708		21313		22085	

Using the Intel format, the inputs follow “DAOL“ and “EVAS“:

	"DAOL"				"EVAS"			
Letter of the alphabet	D	A	O	L	E	V	A	S
ASCII code decimal	068	065	079	076	069	086	065	083
ASCII hexadecimal	44	41	4F	4C	45	56	41	53
Input in register no.	**0x113C**		**0x113D**		**0x113E**		**0x113F**	
Hexadecimal	4441		4F4C		4556		4153	
Decimal	17473		20300		17750		16723	

The non-modifiable parameter Restore module parameters in the web server will be set to Yes as soon as the network adapter has sent saved parameters to the modules.

4.4.29 0x27FE Number of Entries in the Current Module List

This displays the number of modules that were connected when the network adapter was started.

4.4.30 0x27FF Number of Entries in the Reference Module List

This displays the number of modules that were entered the reference list.

4.4.31 0x2800 – 0x287F Reference Module List

Each module identifier is made up of 4 bytes (2 registers). If a 1 is set in register 1132, the reference module list must be identical to the current module list before the data exchange can begin.

4.4.32 0x2A00 – 0x2A7F Current Module List

Each module identifier is made up of 4 bytes (2 registers) (refer to the Overview of module IDs). The modules that were connected when the network adapter was started are entered here. To simplify configuration, the current module list can be copied into the reference module list.

4.4.33 0x2B00 – 0x2B7F Module Offsets of Process Data

For each module there are two registers reserved to indicate the offset between the start address within the packed process data and the address 0x0000: The first register indicates the bit-offset of the outputs, the second one indicates the bit-offset of the inputs. Thus, it is possible to use this information directly for the access to coils or Discrete Inputs. Converting the address syntax is necessary for a register- wise access (refer to the table "Implemented Modbus functions").

In case there are no outputs or inputs, the register entry is 0xFFFF.

4.4.34 0x8000 – 0x87FF Process Data Inputs

For each module a data length of 64 bytes (32 registers) is reserved.

Example: Module 3 starts at address 0xC200..

4.4.35 0x9000 – 0x97FF Process Data Outputs

For each module a data length of 64 bytes (32 registers) is reserved.

Example: Module 3 starts at address 0x9040.

4.4.36 0xA000 – 0xA7FF Diagnostics

For each module a diagnostics data length of 64 bytes (32 registers) is reserved.

Example: Module 3 starts at address 0xA040.

In case of a diagnostics message, the 47 bytes of the module diagnosis are entered here from the corresponding tables (see the table of diagnostic data in the corresponding module description in the module chapter).

If a 1 is set in register 0x1134, reading out the corresponding diagnosis results in a confirmation of the alarm.

4.4.37 0xB000 – 0xB7FF Process Alarms

For each module a process alarm data length of 64 bytes (32 registers) is reserved.

Example: Module 3 starts at address 0xB040.

In case of a process alarm, the 4 bytes of the module are entered here from the corresponding table (see the table of process alarms in the corresponding module description in the module chapter).

4.4.38 0xC000 –0xFFFF Parameters

For each module a parameter data length of 256 registers is reserved. Example: Module 3 starts with address 0xC200. The modules can be parametrized via the web server (refer to Section 9:, Web Server) or via the Modbus master.

One register is assigned to each module parameter with a size of max. 16 bits. 32-bit parameters use two consecutive registers (consider Motorola format!). The sequence of parameters as well as the optional values are listed in the parameter tables of the individual module descriptions (refer to Section 6: Installation).

Example: Parameter 8 of module 3 has the address 0xC207 (provided that, there is no 32-bit parameter prior to it in the same module). Examples for 32-bit parameters are “Period duration“ of the pulse width modulation modules and „End value“ of the counter modules.

This Section contains detailed descriptions and technical specification of the various RSTi-EP modules.

4.5 EtherNet/IP™ Network Adapter EPXEIP001

The EPXEIP001 Network Adapter is an EtherNet/IP™ participant developed according to IEC 61158. The adapter is the head module for the RSTi-EP system bus, to which up to 64 active RSTi-EP modules can be connected. The EtherNet/IP adapter has two Ethernet ports, and the integrated switch supports a line network structure.

The adapter can be accessed with a system-independent web server application via the USB service interface or the Ethernet. Thus, all information, such as diagnostics, status values and parameters, can be read and all connected modules can be simulated or forced.

The station's main power supply is integrated in the adapter. Power is supplied via two 4-pole connectors, separated into the input and output current paths.

Figure 45: Network Adapter EPXEIP001

4.5.1 LEDs

Figure 46: LED Status Indicators EPXEIP001

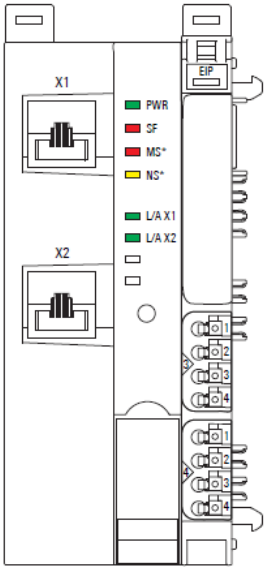

LED Status Indicators

LED	Indication	LED State/Description
PWR	Power LED	**Green:** Supply voltage connected
SF	System Fault	**Red**: Configuration error, or error in the network adapter, or error in a module, or there is a new diagnostic report **Red flashing:** Station in Force mode
BF	Bus fault	**Red**: No connection to the fieldbus **Red flashing**: Configuration error, no connection to the control unit, or error in the parameter set
MT	Maintenance Required	**Yellow**: Error on the system bus or fieldbus
MS	Module Status	**Red**: More than one module does not fit the start-up configuration (or no fieldbus connection) **Red flashing:** One module does not fit the start-up configuration or there is a diagnostic report on at least one module **Green:** Ready for operation **Green flashing**: Network Adapter not configured **Red/Green flashing:** LED Self-test during Start
NS	Network Status	**Red**: IP-Address conflict **Red flashing:** Timeout of the exclusive owner connection **Green:** At least one EtherNet/IP connection is established **Green flashing**: No EtherNet/IP connection is established **Red/Green flashing:** LED Self-test during Start **Off:** At least one EtherNet/IP connection is established **Yellow**: Address conflict or no IP address configured **Yellow flashing (1 Hz):** valid IP address but no Ether-Net/IP connection established **Yellow flashing (4 Hz):** Connection timeout on and exclusive owner

LED	Indication	LED State/Description
L/A X1	Connection/Active	**Green / Yellow**†: Connection established between port 1 of the network adapter and another field device **Green flashing / Yellow flashing**†**:** Data being exchanged on port 1
L/A X2	Connection/Active	**Green / Yellow**†: Connection established between port 2 of the network adapter and another field device **Green flashing / Yellow flashing**†**:** Data being exchanged on port 2
†**Green**: Transfer rate 100 Mbps, **Yellow**: Transfer rate 10 Mbps		

LED Indicators

LED	EPXEIP001
Power Supply	**Green:** Supply voltage > 18Vdc **Red:** At least one current path < 18 V
3.1	**Green:** Input current path supply voltage > 18Vdc
3.2	**Red:** Input current path supply voltage < 18Vdc
3.3	
3.4	**Red:** Internal fuse defective
4.1	**Green:** Output current path supply voltage > 18Vdc
4.2	**Red:** Output current path supply voltage < 18Vdc
4.3	
4.4	**Red:** Internal fuse defective

For error messages, refer to Section 12, LED Indicators and Troubleshooting.

4.5.2 Connection Diagrams

Figure 47: Connection Diagram EPXEIP001

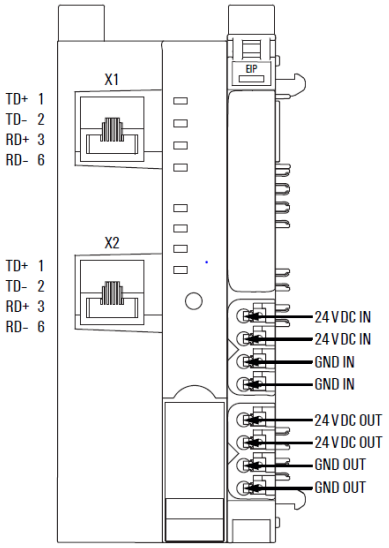

⚠CAUTION

In case of a maximum power supply of >8 A and a maximum temperature of > +55°C (131 °F), all four contacts must be connected with 1.5 mm² wiring.

Figure 48: Block Diagram EPXEIP001

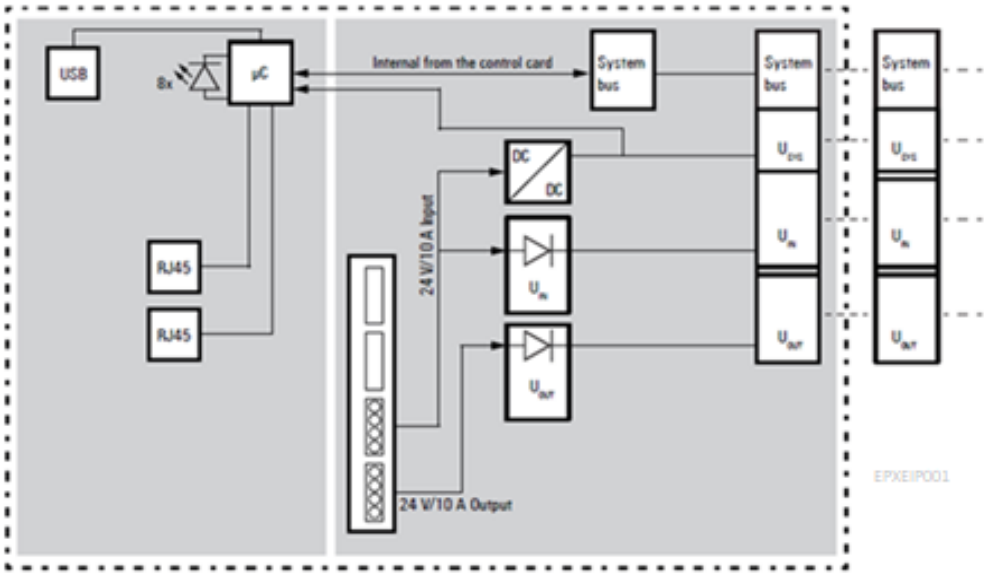

4.5.3 Specifications: EPXEIP001

Specification		Description	
System data			
Connection		2 x RJ-45	
Fieldbus protocol		EtherNet/IP	
Process image		Process Data	max. 2 x 494 Bytes
		Parameter data	max. 64 x 64 Bytes
		Diagnostic data	max. 64 x 47 Bytes
Number of modules		max. 64 active	
Configuration interface		Micro USB 2.0	
Transfer rate		Fieldbus	10 Mbps/100 Mbps
		RSTi-EP system bus	Max. 48 Mbps
Supply			
Supply voltage for system and inputs		20.4V – 28.8V	
Supply voltage for outputs		20.4V – 28.8V	
Max. feed-in current[1)] for input modules		10 A	
Max. feed-in current[1)] for output modules		10 A	
Current consumption from system current path I_{SYS}		112 mA	
Temperature Data[1)]			
< HW 02.00.00	Operation (Horizontal installation)	-20 °C to +60 °C / - 4 °F ... +140 °F (2 x 8 A power supply) -20 °C to +55 °C / - 4 °F ... +131 °F (2 x 10 A power supply	
	Operation (Vertical installation)	-20 °C to +55 °C / - 4 °F ... +131 °F (2 x 6 A power supply) -20 °C to +50 °C / - 4 °F ... +122 °F (2 x 8 A power supply)	
Connection data			
Type of connection		PUSH IN	
Conductor cross-section		Single-wired, fine-wired	0.14 – 1.5 mm2 (AWG 26 – 16)
General data			
Operating temperature		-20°C to +60°C (-4 °F to +140 °F)	
Storage temperature		-40°C to +85°C (-40 °F to +185 °F)	
Air humidity (operation/transport)		5% to 95%, noncondensing as per IEC 61131-2	
Width		52 mm (2.05 in)	
Depth		76 mm (2.99 in)	
Height		120 mm (4.72 in)	
Weight		223 (7.87 oz)	
[1)] Restrictions for the use in potentially explosive atmosphere: Only horizontal installation and max. 8 A power supply!			

4.5.4 Modifiable Parameters for EPXEIP001

Parameter	Optional values	Default
IP-Address	4 numbers between 0-255	0.0.0.0
Subnet mask	4 numbers between 0-255	255.255.255.0
Gateway	4 numbers between 0-255	0.0.0.0
IP Configuration	Static, DHCP, BootP	DHCP
IP-Address USB Port†	192.168.1.202; 192.168.2.202, 192.168.3.202, 192.168.4.202, 192.168.5.202	192.168.5.202
Webserver via Ethernet†	disabled / enabled	enabled
Save module parameters[1)]	no / yes / Standard	no
Output Behavior on idle state	All outputs off (0) / Enable substitute values (1) / Hold last value (2)	All outputs off
Process alarm	disabled (0) / enabled (1)	disabled
Diagnostic alarm	Disabled (0) / enabled (1)	disabled
Behavior of outputs on fieldbus error	All outputs off (0) / Enable substitute values (1) / Hold last value (2)	All outputs off
Module behavior on hot swap	Continue data exchange (0) / Behavior like fieldbus error (1)	Continue data exchange
Data format	Motorola (0) / Intel (1)	Intel
Lock force mode	Force mode unlocked / Force mode locked	Force mode unlocked
HTTPS setting[2)]	HTTP & HTTPS concurrent operation/ Only HTTPS; no HTTP	HTTP & HTTPS concurrent operation
† Change requires restart of the network adapter.		

1) Parameter "Save module parameters" in the web server

The choice ''Yes'' or ''Standard'' cannot be displayed in the web server, caused by the data structure of this parameter. The display will be reset to No anytime.

Option ''Yes'': The current image of all module parameters is saved in the network adapter and will be sent to the modules again during the Network adapter's next restart. Subsequent changes of the module parameters are considered and saved only if the option Yes will be chosen again.

Option ''Standard'': The default parameters will be loaded to the modules immediately. Subsequent changes of the module parameters are possible, but they will get loss during the network adapter's next restart.

Parameter "Boot module parameters"

This parameter is non-modifiable. It will be automatically set to 'Restored values' as soon as the network adapter will have sent saved parameter data to the modules.

Assignment of IP addresses

The automatic assignment via DHCP is the default setting of the EPXEIP001. Further options are **BootP** or **Static**. For automatic assigning a respective server must be available in the network. The mode of IP assignment can be changed either via the web server or via the fieldbus.

Changing the mode of IP mapping via the network adapter

Providing that the adapter has already received an address, the mode of IP assignment ca be changed via the following data object: TCP/IP object 0xF5 (245), instance 0x01 (1), attribute 0x03 (3). The options are **Static [0]**, **BootP [1]** or **DHCP [2].**

When switching to mode **Static**, the adapter will keep the address that has been assigned automatically before; this address will be saved permanently. When switching to an automatic mode the adapter will start a request on the respective server immediately.

Allocating a new IP address

A new IP address can be allocated via the following data object: TCP/IP object 0xF5 (245), instance 0x01 (1), attribute 0x05 (5). The new address will be saved permanently, if the mode **Static** is set. Using the automatic assignment, the address will be used temporarily only.

Address Conflict Detection

After an address has been allocated to the adapter, it will be checked whether this address is already used within the network (**ACD**, Address Conflict Detection). In case an address conflict is detected, and the address is rejected, the adapter requests another address from the DHCP server, as long as DHCP mode is active. When using mode BootP or Static, the adapter must be disconnected from the Ethernet and connected again.

The address check is executed every two minutes during operating. It can be turned off via the following data object: TCP/IP object 0xF5 (245), instance 0x01 (1), attribute 0x0A (10).

[2)]HTTPS setting

Note: It is strongly recommended to use HTTPS protocol for connecting to the Network adapter webserver by setting the ''only HTTPS; no HTTP'' in ''HTTPS setting'' parameter.

To change the HTTPS setting in EPXEIP001, follow the below steps-

1. Power up the Network adapter and connect the adapter to PC via micro USB connection.
2. Open internet browser and enter the IP address of the network adapter (default: 192.168.5.202). Web page of Network adapter opens.
3. Click Login and enter User Name and Password and login to the Network Adapter
4. Click on Component List and select Network Adapter

Figure 49: EPXEIP001 Web server page

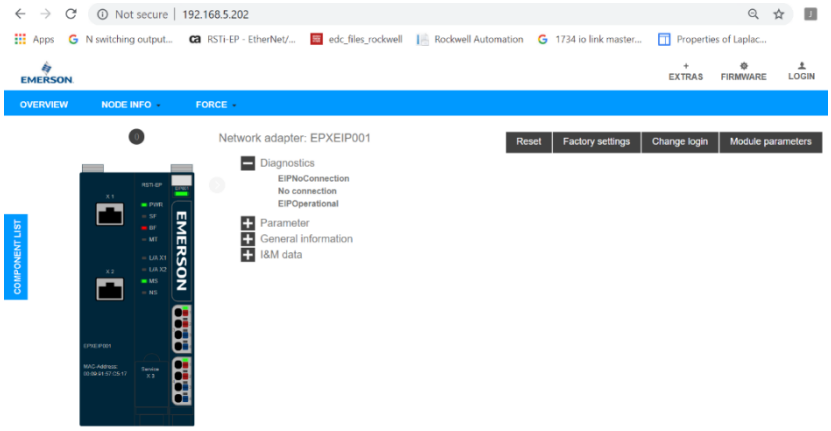

5. Expand ''Parameter'' and click on HTTPS setting & from drop-down select ''only HTTPS; no HTTP'' option.

Figure 50: EPXEIP001 ''HTTPS setting''

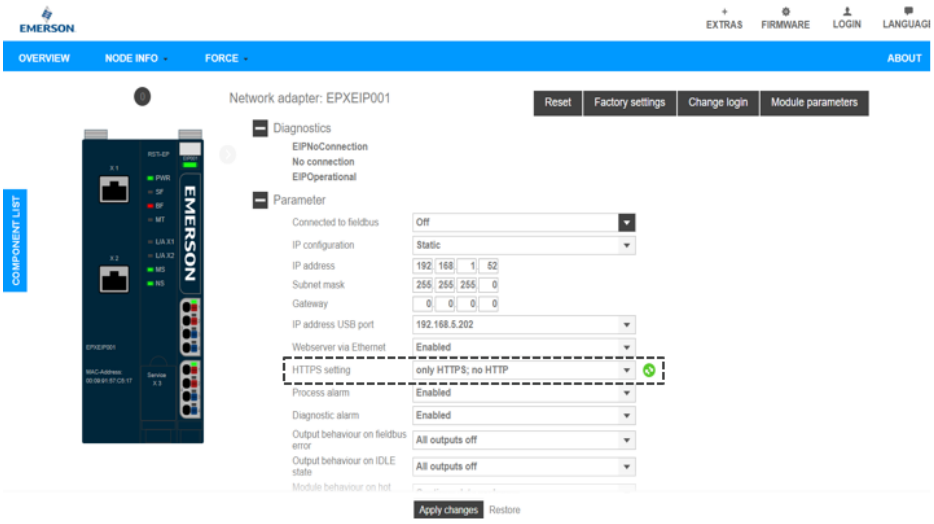

6. Click on ''Apply changes''.

4.5.5 Data types EPXEIP001

Data type	Size	Value range
USINT	1 byte	0 ... 255
UINT	2 bytes	0 ... 65535
UDINT	4 bytes	0 ... (2^{32} – 1)
BOOL	1 bit	
BYTE	8 bits	
WORD	16 bits	
DWORD	32 bits	
STRING	2-byte length indicator, 1 byte per character	
SHORT_STRING	1 byte length indicator, 1 byte per character	
STRING	Structure of Strings	
Padded EPATH		
Padded EPATH		

Configuration assembly

The CLP can be configured in such a way that the configuration assembly 0x7A (122) or 0x7B (123) will be transmitted during connection buildup. The length of assembly 0x7A is variable depending on the module configuration, assembly 0x7B has a fixed length of 400 Bytes. Two connections using the configuration assembly 0x7B are defined in the EDS file (from release 1.1 on).

Writing access to the data attribute of the configuration assembly is not possible during an established connection. To change the station's parameters during an established connection you can use attribute 0x73 of the gateway object or of the slot objects. Alternatively, the RSTi-EP station can be configured via the web server, as long as no fieldbus connection is active. The configuration assembly includes an 8 byte bit mask (equivalent 64 bit) followed by the parameters of all modules. For each module containing parameters a ''1'' is set at the corresponding position of the bit mask. The sequence corresponds with the modules 'sequence within the station, starting with byte 0, bit 0 for slot 1 (first module). After that the parameters of modules with a 3-byte header will follow:1 byte length and 2 byte for the upper 16 bits of the module ID.

Byte	Bit 7	Bit 6	Bit 5	Bit 4	Bit 3	Bit 2	Bit 1	Bit 0
0	M 8	M 7	M 6	M 5	M 4	M 3	M 2	M 1
1	M 16	M 15	M 14	M 13	M 12	M 11	M 10	M 9
2	M 24	M 23	M 22	M 21	M 20	M 19	M 18	M 17
3	M 32	M 31	M 30	M 29	M 28	M 27	M 26	M 25
4	M 40	M 39	M 38	M 37	M 36	M 35	M 34	M 33
5	M 48	M 47	M 46	M 45	M 44	M 43	M 42	M 41
6	M 56	M 55	M 54	M 53	M 52	M 51	M 50	M 49
7	M 64	M 63	M 62	M 61	M 60	M 59	M 58	M 57
8	Parameter length of the first module that includes parameters							
9	Module ID							
10	Module ID							
11	Parameter							
...	...							
	Parameter length of the next module that includes parameters							
	Module ID							
	Module ID							
	Parameter							
...	...							

Parameterizing via module parameter class 0x67

Each module parameter corresponds to one attribute starting from attribute 0x65. The number of attributes depends on the type of module. The ID of the last parameter attribute of a module can be read via attribute 0x64. The attribute data type (USINT, UINT or UDINT) depends on the parameter to be set. The parameter order as well as the possible values can be found in the parameter tables within each module description.
Class 0x67 supports the services "Get_Attributes_All'' and "Set_Attributes_All'', so that all parameters of a module can be written and read in one telegram. All attributes of a module are included in these telegrams beginning with attribute 0x65. Therefore, the total length depends on the number of attributes and the particular data types.

4.5.6 Process data

The EPXEIP001 process data are being packed into these assemblies:

Input Data	
Assembly 0x65 (101)	Assembly 0x67 (103)
2 byte status word	2 byte status word
X byte process data of the modules	X byte process data of the modules
	8 byte diagnostic data
Output Data	
Assembly 0x66 (101)	Assembly 0x68 (104)
2 byte control word	2 byte control word
X byte process data of the modules	X byte process data of the modules
	8 byte diagnostic data control word

Assemblies 0x66 (102) and 0x68 (104) have a run/idle header.

Note: Only the associated assemblies 101 with 102 or 103 with 104 can be used. If the EDS file has been installed this will be checked and an invalid will be rejected.

The first connection established consist either of two assemblies with one for input and one for output data each, or it is an ''input only'' connection used as output assembly 0xC6(198). In addition to an existing output data connection a "listen only'' connection can be established, which uses assembly 0xC7 (199) as output. Neither of these assemblies is accessible via the class assembly. Only one PLC can write into the output data at a time, further connection attempts will be rejected. Although further "Input only'' or "Listen only'' connections can be established.

First Connection	Second Connection	Result
Input+Output (Exclusive owner)	Input+Output (Exclusive owner)	Not possible, as only one connection can write output data.
Input+Output (Exclusive owner)	Input only	permitted
Input+Output (Exclusive owner)	Listen only	permitted
Input only	Input+Output (Exclusive owner)	permitted
Input only	Input only	permitted
Input only	Listen only	permitted
Listen only		Not possible, as Listen only cannot be established as first connection.

Packed process data of the modules

The process data of a digital module are packed directly on the process data of the previous module. The process data of all other modules always starts with the beginning of the next word.

Figure 51: Packed Process data in an exemplified module arrangement 4DI, 8DI, 4AI

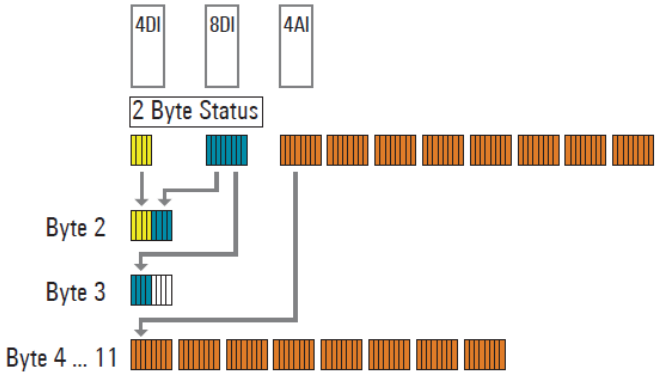

The module's process data include a maximum of 494 byte. Therefore, the process data of assembly 0x65 (101) and 0x66 (102) will include a maximum of 496 byte, whereas the process data of assembly 0x67 (103) and 0x68 (104) include a maximum of 504 byte. The actual length is defined by the arrangement of the modules, the assembly's size is always an even number of bytes (2 byte, 4 byte etc.). So, in the example assembly 0x65 (101) is 12 byte long whereas
assembly 0x67 (103) is 20 byte long.

Note: The size which is expected during the connection is being established can be read from class 0x04(4), instances 0x65 to ox68 (101 to 104), attribute 0x04 (4) or via the web server.

Control Word

8 Bytes of diagnostic data (assembly 0x67) or diagnostic data control word (assembly 0x68) are attached to the process data of both assemblies. Via the control word (2 byte at the beginning) and the diagnostic data control word (8 Byte at the end) of the process output data of assembly 0x68 you can choose which diagnostic data (8 byte at the end) shall be transferred within the process input data: 0 in the control word chooses diagnostic data, the 1 chooses process alarm
data.
Via the diagnostic control word, you choose the module the data of which shall be displayed: If there is a 0 in the diagnostic control word, the bits in the process input data indicate which modules have a diagnostic or a process alarm.
Each bit set indicates an active alarm. If a number from 1 to 64 is written in the diagnostic control word, the process alarm data (4 byte) or the first 8 byte of the diagnostic alarm dataset will be transferred within the process input data.

Control Word	Diagnostics control word	Diagnostic data
0	0	One bit of each module indicates whether it has a diagnosis
0	1 ... 64	Diagnostic data of the set module (the first 8 byte)
1	0	One bit of each module indicates whether it has a process alarm
1	1 ... 64	Process alarm data of the set module (4 bytes are being used)

4.5.7 Status word EPXEIP001(Packed process data input)

Bit	Name	Remarks
0	Summarized module diagnosis	A diagnosis is available for at least one module with diagnostics functionality.
1	Error bit 1	Reserve bit 1, currently not used
2	Error bit 2	Reserve bit 2, currently not used
3	System bus error	Error on the system bus. Communication with the connected modules is disrupted.
4	Unacknowledged diagnosis alarm	Unacknowledged diagnosis alarm
5	Unacknowledged process alarm	Unacknowledged process alarm
6	I/O-Configuration error	Deviation in the configuration. The module list has changed. The list of configured modules (Configured Module Ident List class 0x65 (101), instance 0x01 (1), attribute 0x70 (112)) differs from the module list detected by the adapter (Detected Module Ident List class 0x65 (101), instance 0x01 (1), attribute 0x6F (111)).
7	Master configuration error	Master configuration error. The list of configured modules (Configured Module Ident List class 0x65 (101), instance 0x01, attribute 0x70 (112)) differs significantly from the module list detected by the adapter (Detected Module Ident List class 0x65 (101), instance 0x01 (1), attribute 0x6F (111)) ab. No process data can be exchanged with the modules.
8	Error bit 8	Reserve bit 8, currently not used
9	Error bit 9	Reserve bit 9, currently not used
10	Force mode active	Force mode was activated through the web server. Process data cannot be exchanged between the master and forced channels.
11	Error bit 11	Reserve bit 11, currently not used
12	Error bit 12	Reserve bit 12, currently not used
13	Voltage UOUT error	Error in the voltage supply of output current path
14	Voltage UIN error	Error in the voltage supply of system and input current path
15	Error bit 15	Reserve bit 15, currently not used

4.5.8 Object descriptions EPXEIP001: CIP Common Classes

Class	Attribute		Get	Set	NV[1)]	Data Type[2)]	Name	Description
	hex	dez						
Identity 0x01 (1)								
	Instance 0x00 (0)							
	0x01	1	x			UINT	Revision	Revision of this object
	0x02	2	x			UINT	Max Instance	Highest possible instance of this object
	0x03	3	x			UINT	Number of Instances	Current number of instances
	0x06	6	x			UINT	Max Class Attribute	ID of the last attribute of this class in instance 0
	0x07	7	x			UINT	Max Instance Attribute	ID of the last attribute of this class in the other instances
	Instance 0x01 (1)							
	0x01	1	x		x	UINT	Vendor ID	Vendor ID: 326
	0x02	2	x		x	UINT	Device Type	General type of device: 0x0C
	0x03	3	x		x	UINT	Product Code	Vendor assigned product code: 33492
	0x04	4	x		x	Struct {USINT, USINT}	Revision {Major, Minor}	Revision of the Network adapter
	0x05	5	x		x	WORD	Device Status	Bit0: Owned; Bit2= Configured; Bit4-7: Extended device status; Bit8: Minor recoverable fault; Bit9: Minor unrecoverable fault; Bit10: Major recoverable fault; Bit 11: Major unrecoverable fault; Bit12-15: Extended device status 2
	0x06	6	x		x	UDINT	Serial Number	Serial number of the device; 32 Bit value
	0x07	7	x		x	SHORT_STRING	Product Name	Product name: EPXEIP001
Message Router 0x02 (2)								
	Instance 0x00 (0)							
	0x01	1	x			UINT	Revision	Revision of this object
	0x02	2	x			UINT	Max Instance	Highest possible instance of this object
	0x03	3	x			UINT	Number of Instances	Current number of instances
	0x04	4	x			Struct {UINT, Array of UINT}	Optional Attributes	List of optional attributes
	0x05	5	x			Struct {UINT, Array of UINT}	Optional Services	List of optional services
	0x06	6	x			UINT	Max Class Attribute	ID of the last attribute of this class in instance 0

Class	Attribute		Get	Set	NV[1)]	Data Type[2)]	Name	Description
	hex	dez						
	0x07	7	x			UINT	Max Instance Attribute	ID of the last attribute of this class in the other instances
	Instance 0x01 (1)							
	0x01	1	x			Struct {UINT, Array of UINT}	List of supported objects	Number of objects; Class codes
	0x02	2	x			UINT	Number of supported connections	Number of supported connections
Assembly 0x04 (4)								
	Instance 0x00 (0)							
	0x01	1	x			UINT	Revision	Revision of this object
	0x02	2	x			UINT	Max Instance	Highest possible instance of this object
	0x03	3	x			UINT	Number of Instances	Current number of instances
	0x04	4	x			Struct {UINT, Array of UINT}	Optional Attributes	List of optional attributes
	0x06	6	x			UINT	Max Class Attribute	ID of the last attribute of this class in instance 0
	0x07	7	x			UINT	Max Instance Attribute	ID of the last attribute of this class in the other instances
	Instances 0x65 ... 0x68 (101 ... 104)							
	0x03	3	x	x		Array of Byte	Data	Process data
	0x04	4	x			UINT	Size	Size of process data
	Instances 0x7A (122)							
	0x03	3	x	x		Array of Byte	Data	Configuration data
	0x04	4	x			UINT	Size	Size of configuration data
	Instances 0x7B (123)							
	0x03	3	x	x		Array of Byte	Data	Configuration data
	0x04	4	x			UINT	Size	Size of configuration data (static 400 BYTE)
Connection Manager 0x06 (6)								
	Instance 0x00 (0)							
	0x01	1	x			UINT	Revision	Revision of this object
	0x02	2	x			UINT	Max Instance	Highest possible instance of this object
	0x03	3	x			UINT	Number of Instances	Current number of instances
	0x04	4	x			Struct {UINT, Array of UINT}	Optional Attributes	List of optional attributes
	0x06	6	x			UINT	Max Class Attribute	ID of the last attribute of this class in instance 0
	0x07	7	x			UINT	Max Instance Attribute	ID of the last attribute of this class in the other instances
	Instance 0x01 (1)							
	0x01	1	x	x		UINT	Open Requests	Number of forward open requests
	0x02	2	x	x		UINT	Open Format Rejects	Number of forward open requests, rejected

Class	Attribute		Get	Set	NV[1)]	Data Type[2)]	Name	Description
	hex	dez						
								because of bad format
	0x03	3	x	x		UINT	Open Resource Rejects	Number of forward open requests, rejected because of too few resources
	0x04	4	x	x		UINT	Open Other Rejects	Number of forward open requests, rejected because of other reasons than format or resource
	0x05	5	x	x		UINT	Close Requests	Number of forward close requests
	0x06	6	x	x		UINT	Close Format Rejects	Number of forward close requests, rejected because of bad format
	0x07	7	x	x		UINT	Close Other Rejects	Number of forward close requests, rejected because of other reasons than format
	0x08	8	x	x		UINT	Connection Timeouts	Number of connection timeouts
SNMP 0x52 (82)								
Instance 0x00 (0)								
	0x01	1	x			UINT	Revision	Revision of this object
	0x02	2	x			UINT	Max Instance	Highest possible instance of this object
	0x03	3	x			UINT	Number of Instances	Current number of instances
	0x04	4	x			Struct {UINT, Array of UINT}	Optional Attributes	List of optional attributes
	0x06	6	x			UINT	Max Class Attribute	ID of the last attribute of this class in instance 0
	0x07	7	x			UINT	Max Instance Attribute	ID of the last attribute of this class in the other instances
	Instance 0x01 (1)							
	0x01	1	x	x	x	USINT	SNMP enable	1 = enable, 0 = disable
	0x02	2	x		x	USINT	SNMP Version	1 = SNMPv1, 3 = SNMPv3, 31 = SNMPv1+v3
	0x03	3	x	x	x	Struct {USINT, STRING}	Trap 1	Destination of SNMP-traps, Byte1: 0 = unconfigured, 1 = IP address; String: IP address in form 123.123.123.123
	0x04	4	x	x	x	Struct {USINT, STRING}	Trap 2	Destination of SNMP-traps, Byte1: 0 = unconfigured, 1 = IP address; String: IP address in form 123.123.123.123
	0x05	5	x	x	x	BOOL	Trap enable	1 = enable, 0 = disable
	0x06	6	x		x	USINT	Trap Type	1 = TrapV1PDU, 2 = TrapV2PDU (only with SNMPv3)
TCP IP Interface 0xF5 (245)								

Class	Attribute		Get	Set	NV[1)]	Data Type[2)]	Name	Description
	hex	dez						
	Instance 0x00 (0)							
	0x01	1	x			UINT	Revision	Revision of this object
	0x02	2	x			UINT	Max Instance	Highest possible instance of this object
	0x03	3	x			UINT	Number of Instances	Current number of instances
	0x04	4	x			Struct {UINT, Array of UINT}	Optional Attributes	List of optional attributes
	0x06	6	x			UINT	Max Class Attribute	ID of the last attribute of this class in instance 0
	0x07	7	x			UINT	Max Instance Attribute	ID of the last attribute of this class in the other instances
	Instance 0x01 (1)							
	0x01	1	x			DWORD	Interface Status	Status of the interface Bit 0 ... 3: 0 = not configured, 1 = configured by software, 2 = configured by hardware; Bit 4: Multicast pending; Bit 5: Interface configuration pending; Bit 6: ACD conflicted; Bit 7: ACD fault
	0x02	2	x		x	DWORD	Capability Flags	Bit 0: BootP; Bit 1: DNS; Bit 2: DHCP; Bit 4: Configuration settable; Bit 5: Configurable by hardware; Bit 6: Change requires reset; Bit 7: ACD capable
	0x03	3	x	x	x	DWORD	Control Flags	Bit 0 ... 3: 0 = static IP, 1 = BootP, 2 = DHCP;
	0x04	4	x		x	Struct {UINT, Padded EPATH}	Physical Link Object	Path to internal Ethernet interface
	0x05	5	x	x	x	Struct {5*UDINT, STRING}	Interface Configuration	IP, network mask, gateway; name server 1, name server 2; domain name
	0x06	6	x	x	x	STRING	Host Name	Host name, for informational purpose
	0x08	8	x	x	x	USINT	TTL Value	TTL value for multicast
	0x09	9	x	x	x	Struct {USINT, USINT, UINT, UDINT}	Mcast Config	Multicast configuration Byte 1: 0 = autogenerated, 1 = according to this parameter, 2 = reserved; Byte 2: reserved; Byte 3 - 4: number of multicast addresses; Byte 5 - 7: start address

Class	Attribute		Get	Set	NV[1)]	Data Type[2)]	Name	Description
	hex	dez						
	0x0A	10	x	x	x	BOOL	ACD active	0 = ACD disabled, 1 = ACD enabled
	0x0B	11	x	x	x	Struct {USINT, 6*USINT, 28*USINT}	Last ACD Conflict	Byte 1: Last conflict state, 0 = No conflict, 1 = during probe, 2 = during ongoing, 3 = during Semi Active; following 6 Bytes: MAC of the conflicting packet; following 28 Bytes: conflicting ARP packet
Ethernet Link 0xF6 (246)								
Instance 0x00 (0)								
	0x01	1	x			UINT	Revision	Revision of this object
	0x02	2	x			UINT	Max Instance	Highest possible instance of this object
	0x03	3	x			UINT	Number of Instances	Current number of instances
	0x04	4	x			Struct {UINT, Array of UINT}	Optional Attributes	List of optional attributes
	0x06	6	x			UINT	Max Class Attribute	ID of the last attribute of this class in instance 0
	0x07	7	x			UINT	Max Instance Attribute	ID of the last attribute of this class in the other instances
Instances 0x01 ... 0x03 (1 ... 3)								
	0x01	1	x			UDINT	Interface Speed	Transfer rate 0 = undefined; 10 = 10 MBps; 100 = 100 MBps
	0x02	2	x			DWORD	Interface Flags	Information on the status and configuration of the interface Bit 0: Link active; Bit 1: 0 = Half duplex, 1 = Full duplex; Bit 2 ... 4: 0 = Autonegotiation in progress, 1 = Autonegotiation and speed detection failed, 2 = Autonegotiation failed but speed detected, 3 = Autonegotiation successful, 4 = Autonegotiation deactivated; Bit 5: Requires reset before change settings; Bit 6: Hardware fault
	0x03	3	x		x	6*USINT	MAC address	MAC Address

Class	Attribute		Get	Set	NV[1)]	Data Type[2)]	Name	Description
	hex	dez						
	0x06	6	x	x	x	Struct {WORD, UINT}	Interface Control	Bit 0: 1 = Autonegotiation, 0 = no Autonegotiation; Bit 1: 0 = Half Duplex, 1 = Full Duplex; Byte 3 ... 4: Speed: 10 = 10 MBps, 100 = 100 MBps
	0x07	7	x		x	USINT	Interface Type	0 = unknown, 1 = internal, 2 = Twisted Pair, 3 = optical
	0x08	8	x			USINT	Interface State	0 = unknown, 1 = enabled, 2 = disabled, 3 = testing
	0x09	9	x	x	x	USINT	Admin State	0 = reserved, 1 = enable, 2 = disable
	0x0A	10	x		x	SHORT_STRING	Interface Label	Text string (Port1/Port2/internal)

1) Nonvolatile (data are saved permanently)
2) For the description of data types refer to table Data types

4.5.9 Object descriptions EPXEIP001: Vendor Specific Classes

Class	Attribute		Get	Set	NV[1)]	Data Type[2)]	Name	Description
	hex	dez						
Gateway 0x64 (100)								
	Instance 0x00 (0)							
	0x64	100	x			UINT	Revision	Revision of this object
	0x65	101	x			UINT	Max Instance	Highest possible instance of this object
	0x66	102	x			UINT	Number of Instances	Current number of instances
	0x67	103	x			UINT	Max Class Attribute	ID of the last attribute of this class in instance 0
	Instance 0x01 (1)							
	0x64	100	x		x	UINT	Max Attribute	ID of the last instance attribute
	0x65	101	x		x	STRING	Hardware Version	Hardware version of the adapter
	0x66	102	x		x	STRING	Software Version	Software version of the adapter
	0x67	103	x		x	STRING	Serial Number	Full serial number of the adapter
	0x68	104	x			WORD	Status Word	Status word as in assembly
	0x69	105	x	x		WORD	Control Word	Control word as in assembly
	0x6A	106	x	x	x	BYTE	Parameter Fieldbus error	Parameter “Output behavior on fieldbus error”; All outputs off (0) / Enable substitute values (1) / Hold last value (2)
	0x6B	107	x	x	x	BOOL	Parameter Hot swap	Parameter “Module behavior on hot swap”; Continue data exchange (0) / Behavior like fieldbus error (1)
	0x6C	108	x			Array of Struct {USINT, BYTE, Array of 2 BYTE}	Diag Summary	Diag bytes of all modules with diag: Byte 1: Slot number; Byte 2: Slot state; Byte 3-4: First two bytes of diag
	0x6D	109	x	x	x	BOOL	Parameter Data format	Parameter “Data format”; Motorola (0) / Intel (1)
	0x6E	110	x	x		Array of 4 BYTE	Save/Restore Module Parameter	Write SAVE to save the module parameter; Write LOAD to load the defaults of the module parameter
	0x6F	111	x			Array of 64 DWORD	Current Module List	List of currently plugged modules

Class	Attribute		Get	Set	NV[1)]	Data Type[2)]	Name	Description
	hex	dez						
	0x70	112	x	x	x	Array of 64 DWORD	Module Ref List	List of expected modules
	0x71	113	x	x	x	BOOL	Diagnostic Alarm	Parameter “Diagnosis alarm”; disabled (0) / enabled (1)
	0x72	114	x	x	x	BOOL	Process Alarm	Parameter “Process alarm”; disabled (0) / enabled (1)
	0x73	115	x	x		Array of BYTE	Module Parameter	Array containing all parameter of all modules
	0x74	116	x	x	x	BOOL	Force Lock	Force mode: unlocked (0) / locked (1)
	0x75	117	x	x	x	BYTE	Behavior on Idle	Parameter “Behavior on idle state “; All outputs off (0) / Enable substitute values (1)/ Hold last value (2)
	0x76	118	x		x	Array of 8 BYTE	Unacknowledged Diagnosis	In the event of an unacknowledged diagnosis the Bit in for the respective module is set to 1 (Bit 0 for the first module of the station, Bit 63 for the 64th module).
Slot 0x65 (101)								
Instance 0x00 (0)								
	0x64	100	x			UINT	Revision	Revision of this object
	0x65	101	x			UINT	Max Instance	Highest possible instance of this object
	0x66	102	x			UINT	Number of Instances	Current number of instances
	0x67	103	x			UINT	Max Class Attribute	ID of the last attribute of this class in instance 0
Instances 0x01 ... 0x40 (1 ... 64)								
	0x64	100	x		x	USINT	Max Attributes	ID of the last instance attribute
	0x65	101	x			STRING	Name	Name of the module
	0x66	102	x			STRING	Product Code	Order number of the module
	0x67	103	x			STRING	Serial Number	Serial number of the module
	0x68	104	x			STRING	Module ID	ID of the module
	0x69	105	x			STRING	Hardware Version	Hardware version of the module
	0x6A	106	x			STRING	Software Version	Software version of the module
	0x6B	107	x			STRING	MX Version	MX version of the module
	0x6C	108	x			BYTE	Slot State	State of the module: 0x01: ok; 0x80: slot empty; 0x81: wrong module; 0x82: diagnosis active
	0x6D	109	x			UINT	Input Bit Length	Length of input data in Bit

Class	Attribute		Get	Set	NV[1)]	Data Type[2)]	Name	Description
	hex	dez						
	0x6E	110	x			UINT	Output Bit Length	Length of output data in Bit
	0x6F	111	x			UINT	Parameter Byte Length	Length of parameter data in Byte
	0x70	112	x			UINT	Diag Byte Length	Length of diagnosis data in Byte
	0x71	113	x			Array of BYTE	Process Data In	Input data of the module
	0x72	114	x	x		Array of BYTE	Process Data Out	Output data of the module
	0x73	115	x	x		Array of BYTE	Parameter Data	Parameter data of the module
	0x74	116	x			Array of BYTE	Diagnosis Data	Diagnosis data of the module
	0x75	117	x			Array of BYTE	Process Alarm Data	Process alarm data of the module
Process Data 0x66 (102)								
Instance 0x00 (0)								
	0x64	100	x			UINT	Revision	Revision of this object
	0x65	101	x			UINT	Max Instance	Highest possible instance of this object
	0x66	102	x			UINT	Number of Instances	Current number of instances
	0x67	103	x			UINT	Max Class Attribute	ID of the last attribute of this class in instance 0
Instance 0x01 (1)								
	0x64	100	x		x	USINT	Max Attributes	ID of the last instance attribute
	0x65	101	x			Array of BYTE	Process Data In	All input data
	0x66	102	x			UINT	Length Process Data In	Total length of input data
	0x67	103	x	x		Array of BYTE	Process Data Out	All output data
	0x68	104	x			UINT	Length Process Data Out	Total length of output data
	0x69	105	x			Array of 8 BYTE	Diag Status	Diagnosis messages as in assembly
	0x6A	106	x			Array of 8 BYTE	Diag Control	Diagnosis control as in assembly
Module Parameter 0x67 (103)								
Instance 0x00 (0)								
	0x64	100	x			UINT	Revision	Revision of this object
	0x65	101	x			UINT	Max Instance	Highest possible instance of this object
	0x66	102	x			UINT	Number of Instances	Current number of instances
	0x67	103	x			UINT	Max Class Attribute	ID of the last attribute of this class in instance 0
Instance 0x01 ... 0x40 (1 ... 64)								
	0x64	100	x		x	UINT	Max Attributes	ID of the last instance attribute
	0x65	101	x	x		UINT	Parameter	Parameters of the module

1) Nonvolatile (data are saved permanently)
2) For the description of data types refer to table Data types

4.5.10 Supported Modules and Power Supplies

The following modules can be used with the current release of the RSTi-EP EtherNet/IP Network Adaptor:

Catalog Number	Module Description
Digital Input Modules	
EP-1214	Digital Input, 4 Points, Positive Logic 24Vdc, 2-, 3-, or 4-Wire
EP-1218	Digital Input, 8 Points, Positive Logic, 24Vdc 2-Wire
EP-1318	Digital Input, 8 Points, Positive Logic, 24Vdc 3-Wire
EP-125F	Digital Input, 16 Points, Positive Logic, 24Vdc, 1-Wire
EP-12F4	Digital Input, 4 Points, Positive Logic 24Vdc, 2-, 3-, or 4-Wire, Time stamp
EP-153F	Digital Input, 16 Points, Negative Logic, 24Vdc, 1-Wire
EP-1804	Digital Input, 4 Points 110/230Vac (65 – 277Vac), 2-Wire, Isolated
Digital Output Modules	
EP-2214	Digital Output, 4 Points, Positive Logic 24Vdc, 0.5A, 2-, 3-, or 4-Wire
EP-2614	Digital Output, 4 Points, Positive Logic 24Vdc, 2.0A, 2-, 3-, or 4-Wire
EP-2634	Digital Output, 4 Points, Positive/Negative Logic 24Vdc, 2.0A, 2-, 3-, or 4-Wire
EP-2218	Digital Output, 8 Points, Positive Logic, 24Vdc, 0.5A, 2-Wire
EP-225F	Digital Output, 16 Points, Positive Logic, 24Vdc, 0.5A, 1-Wire
EP-291F	Digital Output, 16 Points, Negative Logic, 24Vdc, 1-Wire
Digital Relay Output Modules	
EP-2714	Digital Relay Output, 4 Points, Positive Logic, 24 -–220 Vdc/Vac, 6A, 2-Wire
EP-2814	Solid-state Relay Output Module
Analog Input Modules	
EP-3164	Analog Input, 4 Channels Voltage/Current 16 Bits 2-, 3-, or 4-Wire
EP-3264	Analog Input, 4 Channels Voltage/Current 16 Bits with Diagnostics 2-, 3-, or 4-Wire
EP-3664	Analog Input, 4 Channels Voltage/ Current 16 Bits with Diagnostics 2-, 3-, or 4-Wire, Differential
EP-3124	Analog Input, 4 Channels Voltage/Current 12 Bits 2-, 3-, or 4-Wire
EP-3368	Analog Input, 8 Channels Current 16 Bits 2-, 3-, or 4-Wire
EP-3468	Analog Input, 8 Channels Current 16 Bits 2-, 3-, or 4-Wire, Channel Diagnostic
EP-3704	Analog Input, 4 Channels RTD 16 Bits with Diagnostics 2-, 3-, or 4-Wire
EP-3804	Analog Input, 4 Channels TC 16 Bits with Diagnostics 2-, 3-, or 4-Wire
EP-1813	Power Measurement Module, 8 Channels
Analog Output Modules	
EP-4164	Analog Output, 4 Channels Voltage/Current 16 Bits 2-, 3-, or 4-Wire
EP-4264	Analog Output, 4 Channels Voltage/Current 16 Bits with Diagnostics 2-, 3-, or 4-Wire
Specialty Modules	
EP-5111	1 Channel High Speed Counter, AB 100 kHz 1 DO 24Vdc, 0.5A
EP-5112	2 Channel High Speed Counter, AB 100 kHz
EP-5212	2 Channel Frequency Measurement, 100 kHz
EP-5261	1 Channel Serial Communications, 232, 422, 485
EP-5311	1 Channel SSI Encoder, BCD or Gray-Code Format, 5/24 Vdc
EP-5422	2 Channels PWM Output, Positive Logic, 24Vdc, 0.5 A
EP-5442	2 Channels PWM Output, Positive Logic, 24Vdc, 2 A

Catalog Number	Module Description
EP-5324	IO-Link Communication module, 4 Channels
Power Feed Modules for Input Current Path	
EP-7631	Power Module, 1 Channel 24Vdc Input Flow 10A
Power Feed Modules for Output Current Path	
EP-7641	Power Module, 1 Channel 24Vdc Output Flow 10A
Safe Feed-input Modules	
EP-1901	1 Safe Feed-Input, 24 Vdc
EP-1902	2 Safe Feed-Inputs, 24 Vdc, Programmable Delay
EP-1922	2 Safe Feed-Inputs, 24 Vdc
Potential Distribution Modules	
EP-711F	Power Module, 16 Channels 24Vdc Potential Distribution +24 Vdc from Input Current Path
EP-751F	Power Module, 16 Channels 24Vdc Potential Distribution +24 Vdc from Output Current Path
EP-700F	Power Module, 16 Channels 24Vdc Potential Distribution Functional Earth
EP-710F	Power Module, 16 Channels 24Vdc Potential Distribution +0Vdc from Input Current Path
EP-750F	Power Module, 16 Channels 24Vdc Potential Distribution +0Vdc from Output Current Path

Section 5: Detailed Description of I/O Modules

5.1 Digital Input Module EP-1214

Figure 52: Digital Input Module EP 1214

Figure 53: Connection Diagram EP-1214

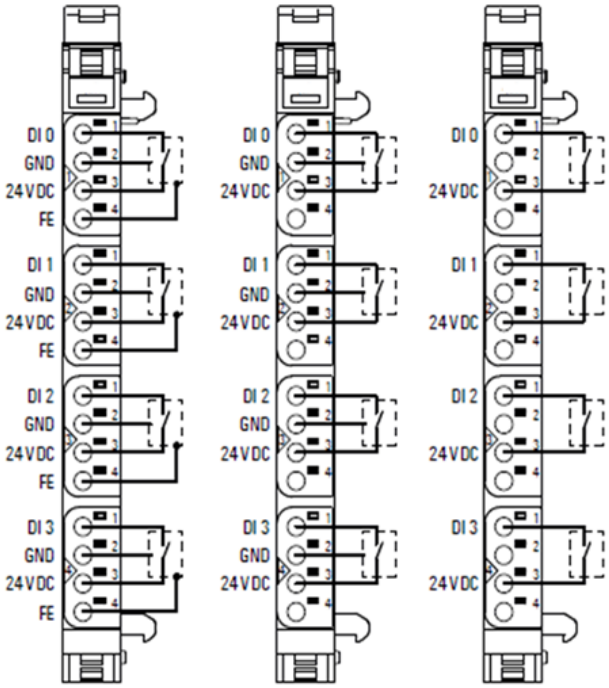

The digital input module EP-1214 can detect up to 4 input signals. One sensor can be connected to each connector using a 2-wire, 3-wire or 3-wire + FE connection. A status LED is assigned to each channel. The module electronics supply the connected sensors with power from the input current path (IIN).

5.1.1 LED Indicators EP-1214

	Module Status	**Green:** Communication over the system bus **Red:** Module System Fault or Diagnostic Fault
	1.1	**Yellow**: Input 0 active
	1.2	--
	1.3	--
	1.4	--
	2.1	**Yellow:** Input 1 active
	2.2	--
	2.3	--
	2.4	--
	3.1	**Yellow:** Input 2 active
	3.2	--
	3.3	--
	3.4	--
	4.1	**Yellow**: Input 3 active
	4.2	--
	4.3	--
	4.4	--

For error messages, refer to the chapter, Accessories and Replacement Parts.

Figure 54: Block Diagram EP-1214

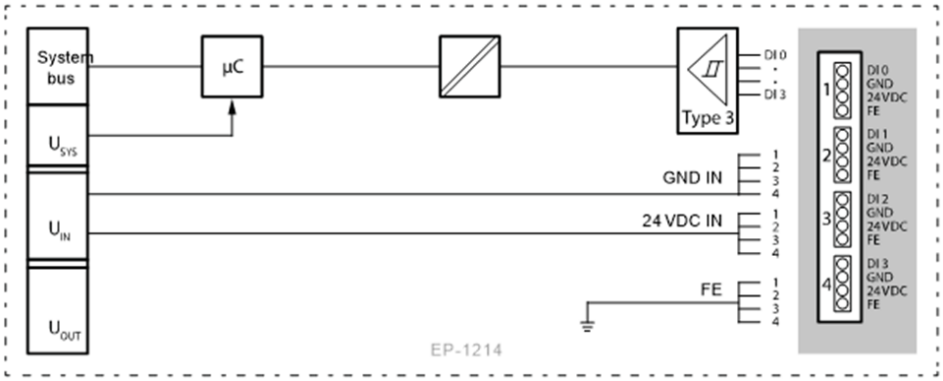

5.1.2 Specifications EP-1214

Specification	Description
System data	
Data	Process, parameter and diagnostic data depend on the network adapter used (refer to Section 3.1, Order and Arrangement of Modules).
Interface	RSTi-EP I/O communication bus
System bus transfer rate	48 Mbps
Inputs	
Channels	4
Sensor types	Type 1 and Type 3 sensors as per IEC 61131-2
Input filter	Input delay adjustable from 0 to 40ms (PROFIBUS-DP to 20ms)
Off voltage	< 5 V
On voltage	> 11 V
Sensor supply	max. 2 A per plug, total max. 8 A
Sensor connection	2-wire, 3-wire, 3-wire + FE
Reverse polarity protection	Yes
Module diagnosis	Yes
Individual channel diagnosis	No
Supply	
Supply voltage	20.4V – 28.8V
Current consumption from system current path ISYS	8 mA
Current consumption from input current path IIN	18 mA + sensor supply current
General data	
Weight	87 g (3.07 oz)
For additional general data, refer to Section, General Technical Data for I/O Modules.	

5.1.3 Modifiable Parameters for EP-1214

Channel	Description	Options	Default
0 to 3	Input delay	no (0) / 0.3ms (1) (not at PROFIBUS-DP) / 3ms (2) / 10ms (3) / 20ms (4) / 40ms (5) (not at PROFIBUS-DP)	3ms

5.1.4 Diagnostic Data EP-1214

Name		Bytes	Bit	Description	Default
Error indicator		0	0	Module error	
			1	Internal error	
			2	External error	
			3	Channel error	0
			4	Error	
			5	Reserved	0
			6	Reserved	0
			7	Parameter error	
Module type		1	0	Module Type	0x0F
			1		
			2		
			3		
			4	Reserved	0
			5	Reserved	0
			6	Reserved	0
			7	Reserved	0
Error byte 2		2	0-7	Reserved	0
Error byte 3		3	0-2	Reserved	0
			3	Internal diagnostic FIFO full	0
			4-7	Reserved	0
Channel type		4	0-6	Channel type	0x70
			7	Reserved	0
Diagnostic bits per channel		5		Number of diagnostic bit per channel	0
Number of channels		6		Number of similar channels per module	4
Channel error		7-10	0-31	Reserved	0
Channel 0 error to Channel 31 error		11 to 42	0–7	Reserved	0
Time stamp		43-46		Time stamp [µs] (32-bit)	

5.1.5 Process Data Inputs EP-1214

Byte	Bit	Description
IB0	IX0.0	DI0
	IX0.1	DI1
	IX0.2	DI2
	IX0.3	DI3
	IX0.4	reserved
	IX0.5	reserved
	IX0.6	reserved
	IX0.7	reserved

5.2 Digital Input Module EP-1218

Figure 55: Digital Input Module EP-1218

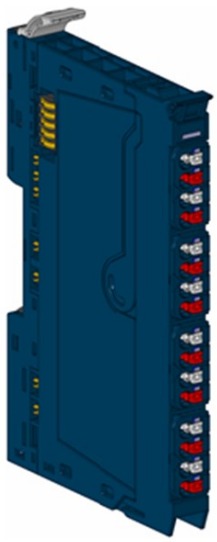

Figure 56: Connection Diagram EP-1218

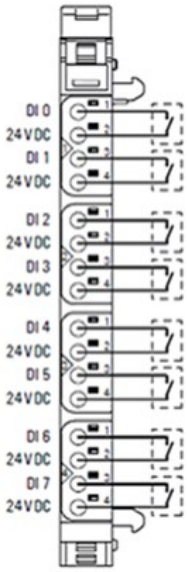

The digital input module EP-1218 can detect up to 8 input signals. Two sensors can be connected to each connector using a 2-wire connection. A status LED is assigned to each channel. The module electronics supply the connected sensors with power from the input current path (IIN).

5.2.1 LED Indicators EP-1218

Module Status	**Green**: Communication over the system bus **Red:** Module System Fault or Diagnostic Fault
1.1	**Yellow:** Input 0 active
1.2	--
1.3	**Yellow**: Input 1 active
1.4	--
2.1	**Yellow**: Input 2 active
2.2	--
2.3	**Yellow**: Input 3 active
2.4	--
3.1	**Yellow:** Input 4 active
3.2	--
3.3	**Yellow**: Input 5 active
3.4	--
4.1	**Yellow**: Input 6 active
4.2	--
4.3	**Yellow**: Input 7 active
4.4	--

For error messages refer to Section 12, LED Indicators and Troubleshooting.

Figure 57: Block Diagram EP-1218

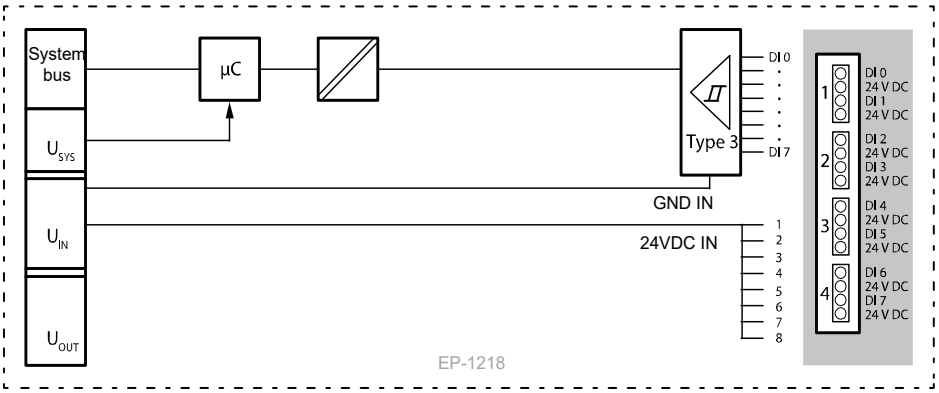

5.2.2 Specifications EP-1218

Specification	Description
System data	
Data	Process, parameter and diagnostic data depend on the network adapter used (refer to Section, Order and Arrangement of Modules).
Interface	RSTi-EP I/O communication bus
System bus transfer rate	48 Mbps
Inputs	
Number	8
Sensor types	Type 1 and Type 3 sensors as per IEC 61131-2
Input filter	Input delay adjustable from 0 to 40ms (PROFIBUS-DP to 20ms)
Low input voltage	< 5 V
High input voltage	> 11 V
Sensor supply	max. 15 mA per channel
Sensor connection	2-wire
Reverse polarity protection	Yes
Module diagnosis	Yes
Individual channel diagnosis	No
Supply	
Supply voltage	20.4V – 28.8V
Current consumption from system current path ISYS	8 mA
Current consumption from input current path IIN	30 mA + sensor supply current
General data	
Weight	85 g (2.99 oz)
For additional general data, refer to Section, General Technical Data for I/O Modules.	

5.2.3 Modifiable Parameters for EP-1218

Channel	Description	Options	Default
0 to 7	Input delay	no (0) / 0.3ms (1) (not at PROFIBUS-DP) / 3ms (2) / 10ms (3) / 20ms (4) / 40ms (5) (not at PROFIBUS-DP)	3ms

5.2.4 Diagnostic Data EP-1218

Name	Bytes	Bit	Description	Default
Error indicator	0	0	Module error	
		1	Internal error	

Name	Bytes	Bit	Description	Default
		2	External error	
		3	Channel error	0
		4	Error	
		5	Reserved	0
		6	Reserved	0
		7	Parameter error	
Module type	1	0	Module Type	0x0F
		1		
		2		
		3		
		4	Reserved	0
		5	Reserved	0
		6	Reserved	0
		7	Reserved	0
Error byte 2	2	0-7	Reserved	0
Error byte 3	3	0-2	Reserved	0
		3	Internal diagnostic FIFO full	0
		4-7	Reserved	0
Channel type	4	0-6	Channel type	0x70
		7	Reserved	0
Diagnostic bits per channel	5		Number of diagnostic bit per channel	0
Number of channels	6		Number of similar channels per module	8
Channel error	7-10	0-31	Reserved	0
Channel 0 error to Channel 31 error	11 to 42	0–7	Reserved	0
Time stamp	43-46		Time stamp [µs] (32-bit)	

5.2.5 Process Data Inputs EP-1218

Byte	Bit	Description
IB0	IX0.0	DI0
	IX0.1	DI1
	IX0.2	DI2
	IX0.3	DI3
	IX0.4	DI4
	IX0.5	DI5
	IX0.6	DI6
	IX0.7	DI7

5.3 Digital Input Module EP-1318

Figure 58: Digital Input Module EP-1318

Figure 59: Connection Diagram EP-1318

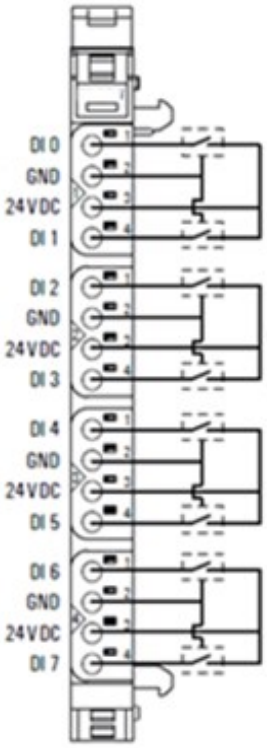

The digital input module EP-1318 can detect up to 8 input signals. Two sensors can be connected to each connector using a 2-wire or 3-wire connection. A status LED is assigned to each channel. The module electronics supply the connected sensors with power from the input current path (IIN).

5.3.1 LED Indicators EP-1318

Module Status	**Green**: Communication over the system bus **Red:** Module System Fault or Diagnostic Fault
1.1	**Yellow**: Input 0 active
1.2	--
1.3	--
1.4	**Yellow:** Input 1 active
2.1	**Yellow**: Input 2 active
2.2	--
2.3	--
2.4	**Yellow**: Input 3 active
3.1	**Yellow**: Input 4 active
3.2	--
3.3	--
3.4	**Yellow**: Input 5 active
4.1	**Yellow**: Input 6 active
4.2	--
4.3	--
4.4	**Yellow**: Input 7 active

For error messages refer to Section 12, LED Indicators and Troubleshooting.

Figure 60: Block Diagram EP-1318

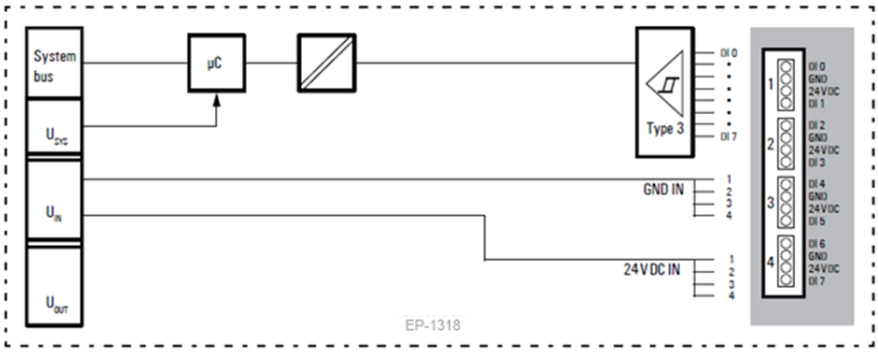

5.3.2 Specifications EP-1318

Specification	Description
System data	
Data	Process, parameter and diagnostic data depend on the network adapter used (refer to Section 3.1, Order and Arrangement of Modules
Interface	RSTi-EP I/O communication bus
System bus transfer rate	48 Mbps
Inputs	
Number	8
Sensor types	Type 1 and Type 3 sensors as per IEC 61131-2
Input filter	Input delay adjustable from 0 to 40ms (PROFIBUS-DP to 20ms)
Low input voltage	< 5 V
High input voltage	> 11 V
Sensor supply	max. 2 A per plug, total max. 8 A
Sensor connection	2-wire, 3-wire
Reverse polarity protection	Yes
Module diagnosis	Yes
Individual channel diagnosis	No
Supply	
Supply voltage	20.4V – 28.8V
Current consumption from system current path ISYS	8 mA
Current consumption from input current path IIN	30 mA + sensor supply current
General data	
Weight	83 g (2.93 oz)
For additional general data, refer to Section 1.5, General Technical Data for I/O Modules.	

5.3.3 Modifiable Parameters for EP-1318

Channel	Description	Options	Default
0 to 7	Input delay	no (0) / 0.3ms (1) (not at PROFIBUS-DP) / 3ms (2) / 10ms (3) / 20ms (4) / 40ms (5) (not at PROFIBUS-DP)	3ms

5.3.4 Diagnostic Data EP-1318

Name	Bytes	Bit	Description	Default
Error indicator	0	0	Module error	
		1	Internal error	
		2	External error	
		3	Channel error	0
		4	Error	
		5	Reserved	0
		6	Reserved	0
		7	Parameter error	
Module type	1	0	Module Type	0x0F
		1		
		2		
		3		
		4	Reserved	0
		5	Reserved	0
		6	Reserved	0
		7	Reserved	0
Error byte 2	2	0-7	Reserved	0
Error byte 3	3	0-2	Reserved	0
		3	Internal diagnostic FIFO full	0
		4-7	Reserved	0
Channel type	4	0-6	Channel type	0x70
		7	Reserved	0
Diagnostic bits per channel	5		Number of diagnostic bit per channel	0
Number of channels	6		Number of similar channels per module	8
Channel error	7-10	0-31	Reserved	0
Channel 0 error to Channel 31 error	11 to 42	0–7	Reserved	0
Time stamp	43-46		Time stamp [µs] (32-bit)	

5.3.5 Process Data Inputs EP-1318

Byte	Bit	Description
IB0	IX0.0	DI0
	IX0.1	DI1
	IX0.2	DI2
	IX0.3	DI3
	IX0.4	DI4
	IX0.5	DI5
	IX0.6	DI6
	IX0.7	DI7

5.4 Digital Input Module EP-1804

Figure 61: Digital Input Module EP-1804

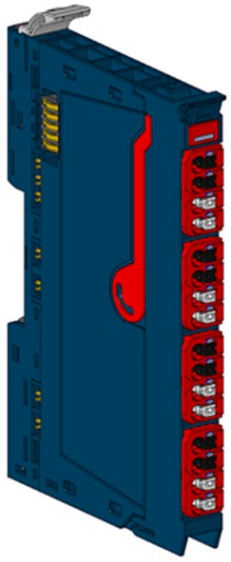

Figure 62: Connection Diagram EP-1804

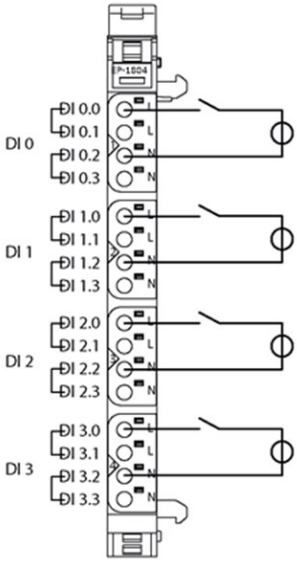

The digital input module EP-1804 can detect up to 4 binary control signals. One sensor can be connected to each connector using a 2-wire connection. Both L and N connections of each input are bridged internally. The four inputs are galvanic isolated, they can be supplied with input voltages between 110Vac and 230Vac. Solely AC measurements can be run.

⚠ WARNING

A status LED is assigned to each channel. All signal lines must be supplied from the same power system.

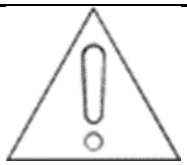

Attention

The module can be destroyed by too high frequencies.

The input frequency may be 65 Hz at maximum, the switching frequency 15 Hz at maximum.

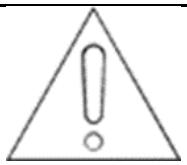

Attention

The module can be destroyed by too high input currents of the signal lines.

The inputs must be ensured using a slow fuse max. 4 A

5.4.1 LED Indicators EP-1804

Module Status	**Green:** Communication over the system bus **Red**: Module System Fault or Diagnostic Fault
1.1	**Yellow**: Input 0 active
1.2	--
1.3	--
1.4	--
2.1	**Yellow**: Input 1 active
2.2	--
2.3	--
2.4	--
3.1	**Yellow**: Input 2 active
3.2	--
3.3	--
3.4	--
4.1	**Yellow**: Input 3 active
4.2	--
4.3	--
4.4	--

For error messages refer to Section 12, LED Indicators and Troubleshooting.

Figure 63: Block Diagram EP-1804

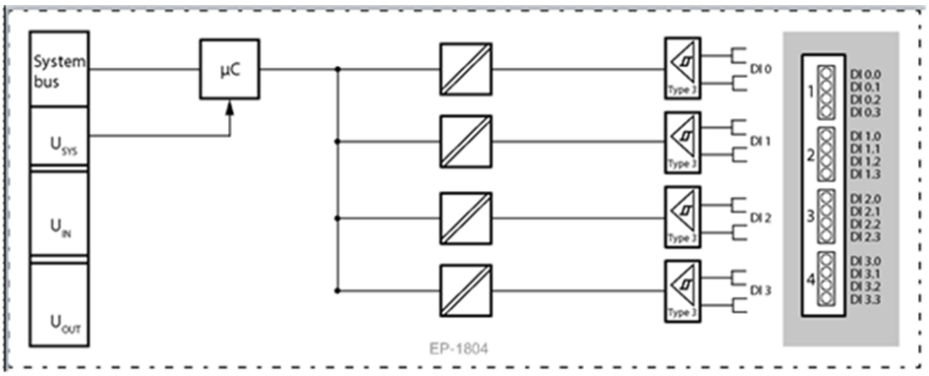

5.4.2 Specifications EP-1804

Specification	Description
System data	
Data	Process, parameter and diagnostic data depend on the network adapter used (refer to Section 3.1, Order and Arrangement of Modules).
Interface	RSTi-EP I/O communication bus
System bus transfer rate	48 Mbps
Galvanic isolation	4kV between the channels as well as between channels and power supply
Line-to-line voltage	400V between the channels possible
Inputs	
Number	4
Input type	P-switching, for Type 3 sensors as per IEC 61131-2
Input filter	Input delay 10ms
Low input voltage	< 65V
High input voltage	> 80V
Input voltage maximum	277Vac (UL); 264,5Vac (VDE)
Input frequency, typical	50 Hz, 60 Hz
Sensor supply	No
Sensor connection	2-wire
Module diagnosis	Yes
Individual channel diagnosis	No
Supply	
Supply voltage	20.4V – 28.8V
Current consumption from system current path ISYS	8 mA
Current consumption from input current path IIN	Nil
General data	
Weight	89 g (3.07 oz)

5.4.3 Diagnostic Data EP-1804

Name	Bytes	Bit	Description	Default

Error indicator	0	0	Module error	
		1	Internal error	
		2	External error	
		3	Channel error	0
		4	Error	
		5	Reserved	0
		6	Reserved	0
		7	Parameter error	
Module type	1	0	Module Type	0x05
		1		
		2		
		3		
		4	Reserved	0
		5	Reserved	0
		6	Reserved	0
		7	Reserved	0
Error byte 2	2	0-7	Reserved	0
Error byte 3	3	0-2	Reserved	0
		3	Internal diagnostic FIFO full	0
		4	Power supply fault	0
		5-7	Reserved	0
Channel type	4	0-6	Channel type	0x70
		7	Reserved	0
Diagnostic bits per channel	5		Number of diagnostic bit per channel	8
Number of channels	6		Number of similar channels per module	4
Channel error	7-10	0-31	Reserved	0
Channel 0 error to Channel 31 error	11 to 42	0–7	Reserved	0
Time stamp	43-46		Time stamp [µs] (32-bit)	

5.4.4 Process Data Inputs EP-1804

Byte	Bit	Description
IB0	IX0.0	DI0
	IX0.1	DI1
	IX0.2	DI2
	IX0.3	DI3
	IX0.4	Reserved
	IX0.5	Reserved
	IX0.6	Reserved
	IX0.7	Reserved

5.5 Digital Input Module EP-125F

Figure 64: Digital Input Module EP-125F

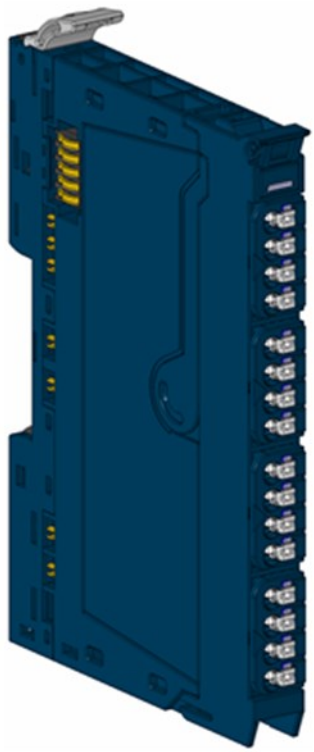

Figure 65: Connection Diagram EP-125F

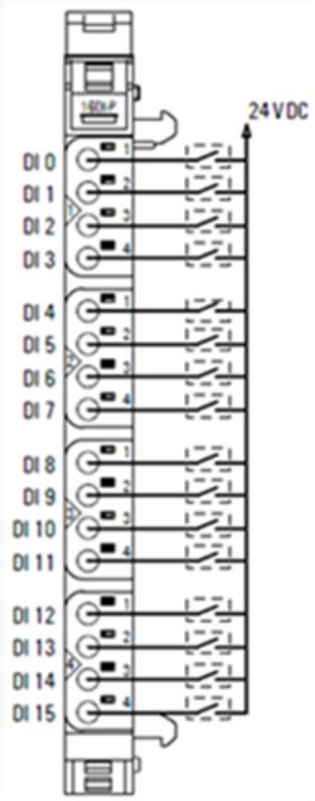

The EP-125F digital input module can detect up to 16 input signals. Four sensors can be connected to each connector in a 1-wire connection. A status LED is assigned to each channel. The connected sensors must be supplied with power from the input current path IIN (e.g. with potential distribution modules).

5.5.1 LED Indicators EP-125F

	Module Status	**Green:** Communication over the system bus **Red**: Module System Fault or Diagnostic Fault
	1.1	**Yellow**: Input 0 active
	1.2	**Yellow**: Input 1 active
	1.3	**Yellow**: Input 2 active
	1.4	**Yellow**: Input 3 active
	2.1	**Yellow**: Input 4 active
	2.2	**Yellow**: Input 5 active
	2.3	**Yellow**: Input 6 active
	2.4	**Yellow**: Input 7 active
	3.1	**Yellow**: Input 8 active
	3.2	**Yellow**: Input 9 active
	3.3	**Yellow**: Input 10 active
	3.4	**Yellow**: Input 11 active
	4.1	**Yellow**: Input 12 active
	4.2	**Yellow**: Input 13 active
	4.3	**Yellow**: Input 14 active
	4.4	**Yellow**: Input 15 active

For error messages refer to Section 12, LED Indicators and Troubleshooting

Figure 66: Block Diagram EP-125F

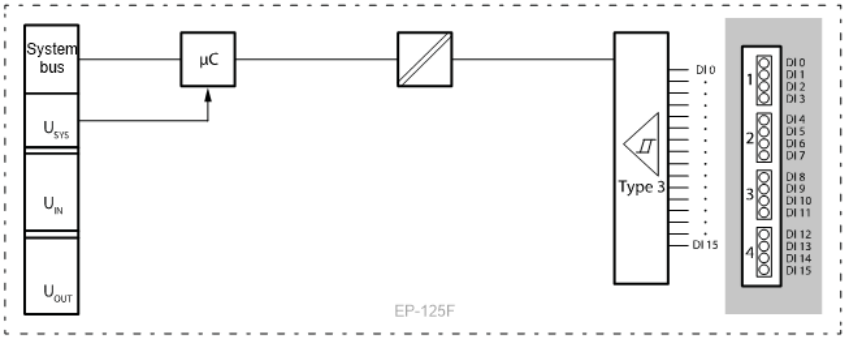

5.5.2 Specifications EP-125F

Specification	Description
System data	
Data	Process, parameter and diagnostic data depend on the network adapter used (refer to Section 3.1Order and Arrangement of Modules
Interface	RSTi-EP I/O communication bus
System bus transfer rate	48 Mbps
Inputs	
Number	16
Sensor types	Type 1 and Type 3 sensors as per IEC 61131-2
Input filter	Input delay 3ms
Low input voltage	< 5 V
High input voltage	> 11 V
Sensor supply	No
Sensor connection	1-conductor
Reverse polarity protection	Yes
Module diagnosis	Yes
Individual channel diagnosis	No
Supply	
Supply voltage	20.4V – 28.8V
Current consumption from system current path ISYS	8 mA
Current consumption from input current path IIN	52 mA
General data	
Weight	87 g (3.07 oz)

5.5.3 Diagnostic Data EP-125F

Name	Bytes	Bit	Description	Default
Error indicator	0	0	Module error	
		1	Internal error	
		2	External error	
		3	Channel error	0
		4	Error	
		5	Reserved	0
		6	Reserved	0
		7	Parameter error	
Module type	1	0	Module Type	0x0F
		1		
		2		
		3		
		4	Reserved	0
		5	Reserved	0
		6	Reserved	0

Name	Bytes	Bit	Description	Default
		7	Reserved	0
Error byte 2	2	0-7	Reserved	0
Error byte 3	3	0-2	Reserved	0
		3	Internal diagnostic FIFO full	0
		4-7	Reserved	0
Channel type	4	0-6	Channel type	0x70
		7	Reserved	0
Diagnostic bits per channel	5		Number of diagnostic bit per channel	0
Number of channels	6		Number of similar channels per module	8
Channel error	7-10	0-31	Reserved	0
Channel 0 error to Channel 31 error	11 to 42	0–7	Reserved	0
Time stamp	43-46		Time stamp [µs] (32-bit)	

5.5.4 Process[3] Data Inputs EP-125F

Byte	Bit	Description
IB0	IX0.0	DI0
	IX0.1	DI1
	IX0.2	DI2
	IX0.3	DI3
	IX0.4	DI4
	IX0.5	DI5
	IX0.6	DI6
	IX0.7	DI7
IB1	IX1.0	DI8
	IX1.1	DI9
	IX1.2	DI10
	IX1.3	DI11
	IX1.4	DI12
	IX1.5	DI13
	IX1.6	DI14
	IX1.7	DI15

5.6 Digital Input Module EP-12F4

Figure 67: Digital Input Module EP-12F4

[3] Internal process data mapping with data format Standard. Depending on the fieldbus specification and the data format of the communicating fieldbus components the bytes and/or words can be reversed during data transfer.

Figure 68: Connection Diagram EP-12F4

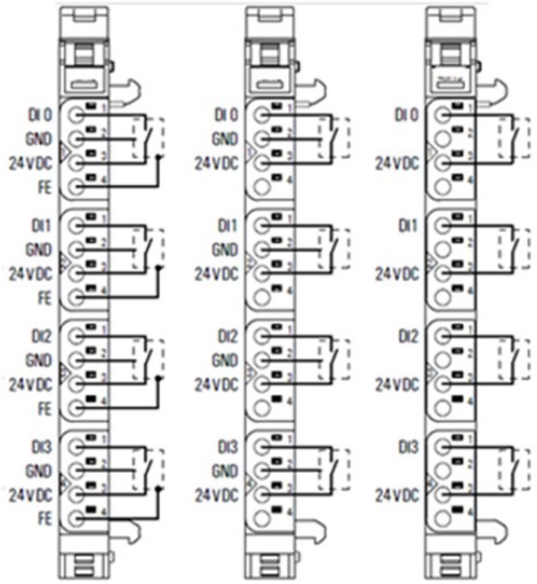

The digital input module with time stamp functionality EP-12F4 can detect up to 4 binary control signals and provide them with a time stamp (resolution 1µs). Depending on the configuration of the module, up to 5 or 15 time-stamp entries can be evaluated.

One sensor can be connected to each connector using a 2-wire, 3-wire, or 3-wire connection + FE. A status LED is assigned to each channel. The module electronics supply the connected sensors with power from the input current path (IIN).

5.6.1 LED Indicators EP-12F4

	Module Status	**Green**: Communication over the system bus **Red**: No communication on system bus or there is a diagnostic message displayed
	1.1	**Yellow**: Input 0 active
	1.2	--
	1.3	--
	1.4	--
	2.1	**Yellow**: Input 1 active
	2.2	--
	2.3	--
	2.4	--
	3.1	**Yellow**: Input 2 active
	3.2	--
	3.3	--
	3.4	--
	4.1	**Yellow**: Input 3 active
	4.2	--
	4.3	--
	4.4	--

For error messages refer to Section 12, LED Indicators and Troubleshooting.

Figure 69: Block Diagram EP-12F4

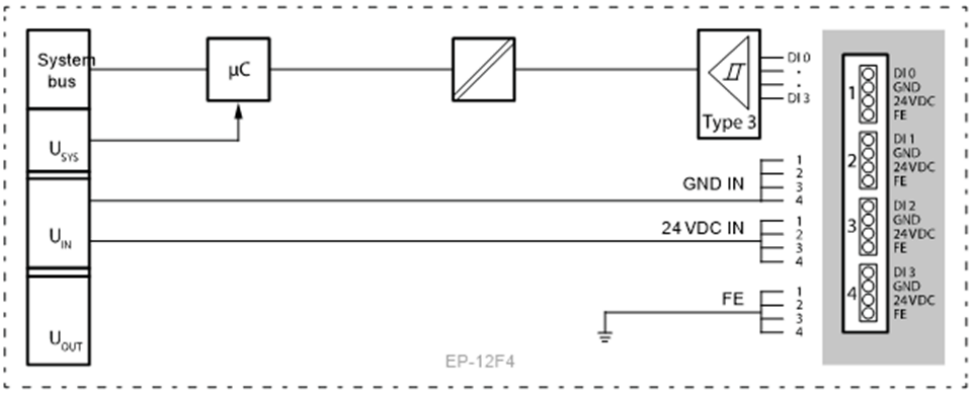

5.6.2 Specifications EP-12F4

Specification	Description
System data	
Data	Process, parameter and diagnostic data depend on the network adapter used (refer to Section 3.1, Order and Arrangement of Modules).
Interface	RSTi-EP I/O communication bus
System bus transfer rate	48 Mbps
Inputs	
Number	4
Sensor types	Type 1 and Type 3 sensors as per IEC 61131-2
Input filter	Input delay adjustable from 0 to 40ms (PROFIBUS-DP to 20ms)
Low input voltage	< 5 V
High input voltage	> 11 V
Max. input current per channel	3 mA
Sensor supply	Yes
Sensor connection	2-wire, 3-wire, 3-wire + FE
Reverse polarity protection	Yes
Module diagnosis	Yes
Individual channel diagnosis	No
Time stamp data width	16 bits
Time stamp resolution	1µs
Supply	
Supply voltage	20.4V – 28.8V
Current consumption from system current path ISYS	8 mA
Current consumption from input current path IIN	18 mA + sensor supply current
General data	
Weight	87 g (3.07 oz)
For additional general data, refer to Section , General Technical Data for I/O Modules.	

5.6.3 Modifiable Parameters for EP-12F4

Channel	Description	Options	Default
0 - 3	Input delay	no (0) / 0.3ms (1) (not at PROFIBUS-DP) / 3ms (2) / 10ms (3) / 20ms (4) / 40ms (5) (not at PROFIBUS-DP)	3ms
0 - 3	Timestamp at edge 0-1	disabled (0) / enabled (1)	disabled
0 – 3	Timestamp at edge 1-0	disabled (0) / enabled (1)	disabled

5.6.4 Diagnostic Data EP-12F4

Name	Bytes	Bit	Description	Default
Error indicator	0	0	Module error	
		1	Internal error	
		2	External error	
		3	Channel error	0
		4	Error	
		5	Reserved	0
		6	Reserved	0
		7	Parameter error	
Module type	1	0	Module Type	0x0F
		1		
		2		
		3		
		4	Reserved	0
		5	Reserved	0
		6	Reserved	0
		7	Reserved	0
Error byte 2	2	0-7	Reserved	0
Error byte 3	3	0-2	Reserved	0
		3	Internal diagnostic FIFO full	0
		4-7	Reserved	0
Channel type	4	0-6	Channel type	0x70
		7	Reserved	0
Diagnostic bits per channel	5		Number of diagnostic bit per channel	0
Number of channels	6		Number of similar channels per module	4
Channel error	7-10	0-31	Reserved	0
Channel 0 error to Channel 31 error	11 to 42	0–7	Reserved	0
Time stamp	43-46		Time stamp [µs] (32-bit)	

5.6.5 Process† Data Inputs EP-12F4

Byte	Format	Name	Remark
IB0	Byte	Input image 1	Bit0 = DI0 ... Bit3 = DI3, Bit4 ... 7 reserved
IB1	Byte	Running number 1	0 ... 127 rotating
IB2	Word	Time stamp 1	0 ... 65,535µs rotating
IB3			
IB4	Byte	Input image 2	
IB5	Byte	Running number 2	
IB6	Word	Time stamp 2	
IB7			
IB8	Byte	Input image 3	
IB9	Byte	Running number 3	
IB10	Word	Time stamp 3	
IB11			
--	--	--	
IB56	Byte	Input image 15	
IB57	Byte	Running number 15	
IB58	Word	Time stamp 15	
IB59			
† Internal process data mapping with data format “Standard”. Depending on the fieldbus specification and the data format of the communicating fieldbus components the bytes and/or words can be reversed during data transfer.			

5.6.6 Time Stamp Function

With time stamp function (ETS = edge time stamp) enabled, at every corresponding edge the time value of the timer is stored in the process image as an ETS entry together with the status of the inputs and a running number.

The module does not use any bytes in the output range. It uses 60 Bytes in the input range for 15 ETS entries each with 4 bytes.

5.6.7 Structure of an ETS Entry

Input image PII	After the edge transition, the status of the inputs is stored here. The input byte has the following bit assignments: Bit 0: DI 0 Bit 1: DI 1 Bit 2: DI 2 Bit 3: DI 3 Bit 4 ... 7: reserved (0)
Running Number RN	The RN (running number) is a consecutive number from 0 to 127. It describes the chronological sequence of the edges
Time stamp ETS_US	The 16-bit timer (0 ... 65,535µs) in the RSTi-EP module is started as soon as the power supply is switched on and after (216 -1) µs restarts at 0.

Figure 70: Structure of ETS Entries in Input Range in Chronological Order

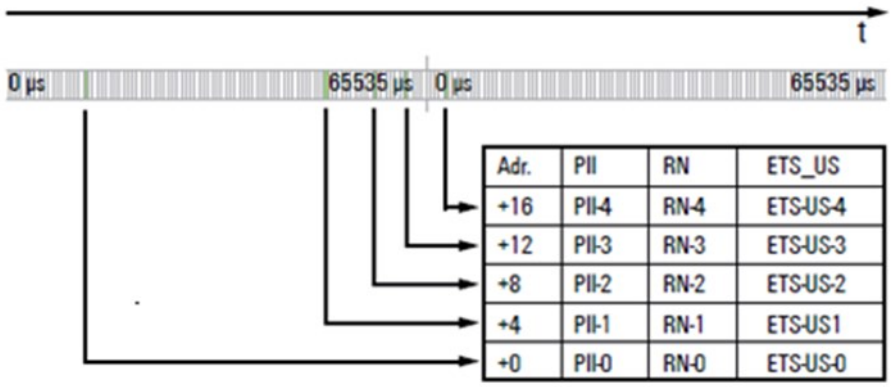

Example for the Mode of Operation

The following example shows the sequence in which ETS entries are stored. The input channels are predefined as follows:

DI 0 and DI 1: time stamp at edge 0-1 enabled

DI 2 and DI 3: time stamp at edge 0-1 disabled

DI 0 and DI 1: time stamp at edge 1-0 enabled

DI 2 and DI 3: time stamp at edge 1-0 disabled

The ETS entries available at time “t” are designated by the green area in the diagram. ETS entries that are not (or no longer) available have a grey background.

Figure 71: Process Image is Empty at t0

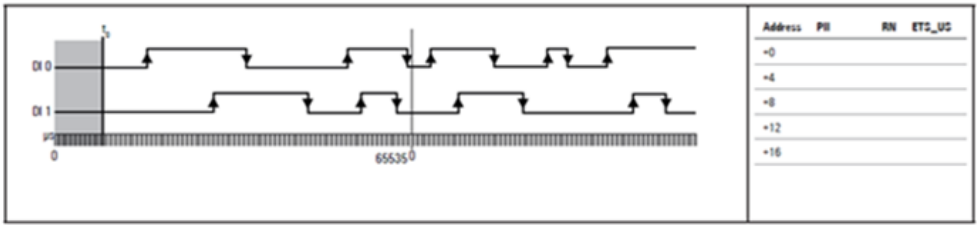

A rising 0-1 edge on DI 0 causes the 1st ETS entry at address + 0.

Figure 72: 1st ETS Entry at t1

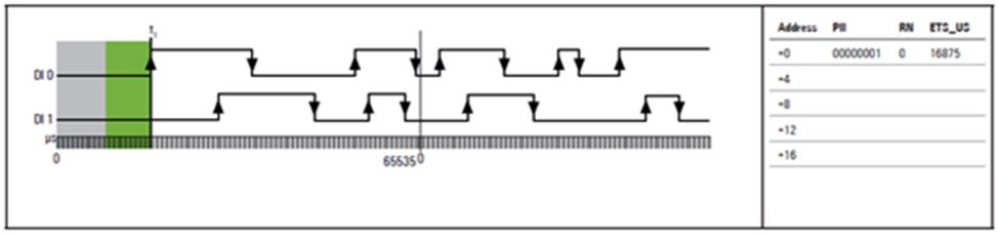

A rising 0-1 edge on DI 1 causes the 2nd ETS entry at address + 0. The 1st ETS entry is shifted by 4 bytes.

Figure 73: 2nd ETS Entry at t2

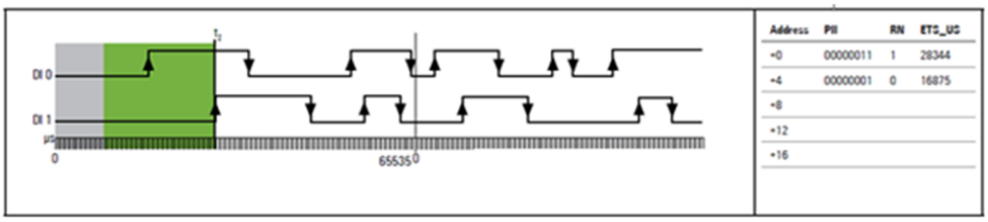

A falling 1-0 edge on DI 0 causes the 3rd ETS entry.

Figure 74 3rd ETS Entry at t3

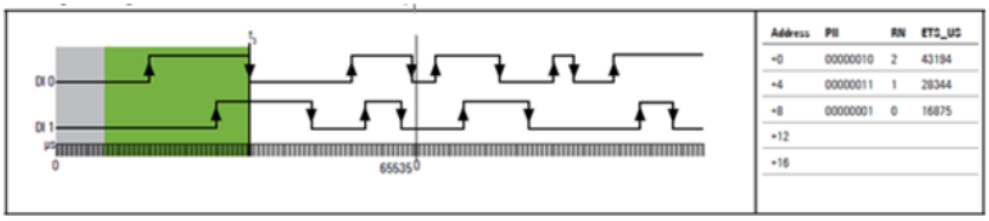

... 4th to14th ETS Entry .

A rising 0-1 edge on DI 0 causes the15th ETS entry.

Figure 75: 15th ETS Entry at t15

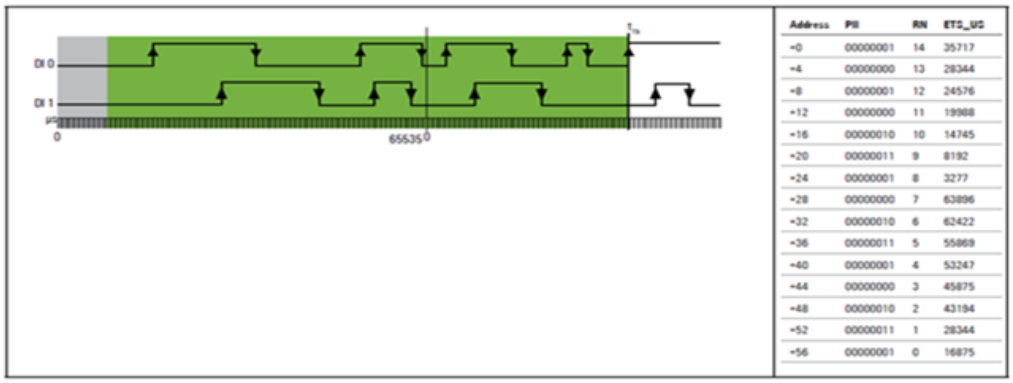

A rising 0-1 edge on DI 1 causes the16th ETS entry. The 1st ETS entry is deleted and not available anymore.

Figure 76: 16th ETS Entry at t16

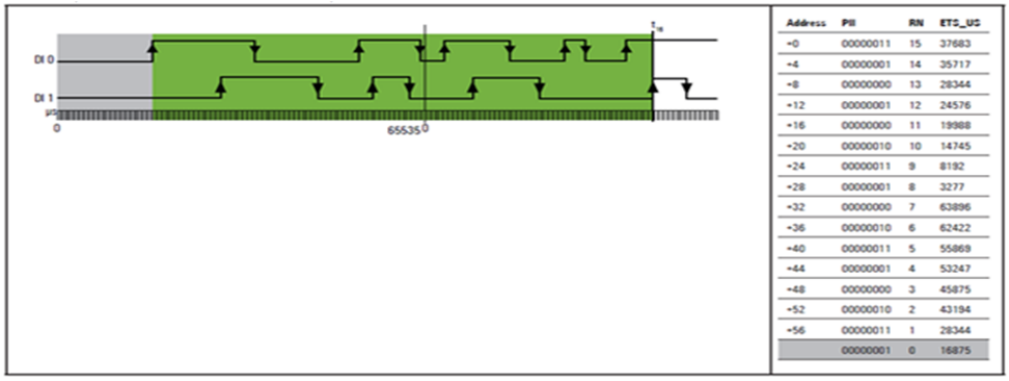

A falling 1-0 edge on DI 1 causes the17th ETS entry. The 2nd ETS entry is deleted and not available anymore.

Figure 77: 17th ETS Entry at t17

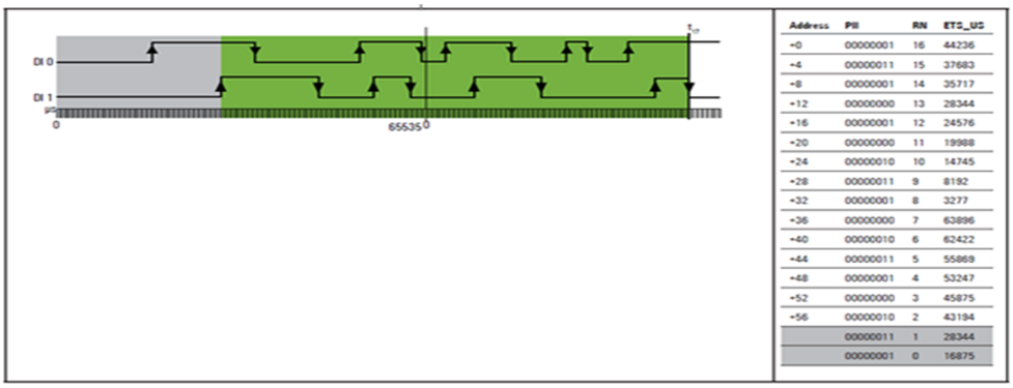

5.7 Digital Input Module EP-153F

Figure 78: Digital Input Module EP-153F

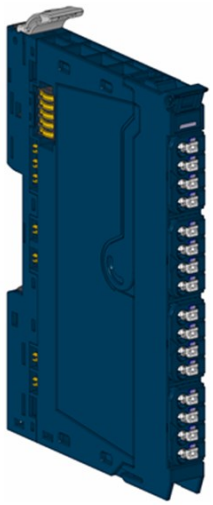

Figure 79: Connection Diagram EP-153F

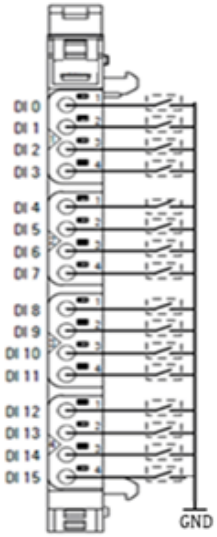

The EP-153F digital input module can detect up to 16 input signals. Four sensors can be connected to each connector in a 1-wire connection. A status LED is assigned to each channel. The connected sensors must be supplied with power from the input current path IIN (e.g. with potential distribution modules).

5.7.1 LED Indicators EP-153F

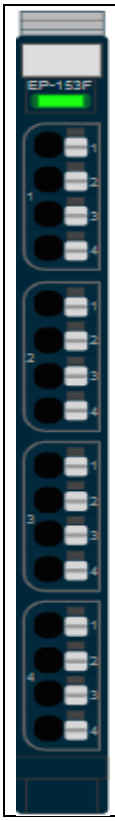	**Module Status**	**Green:** Communication over the system bus **Red**: Module System Fault or Diagnostic Fault
	1.1	**Yellow**: Input 0 active
	1.2	**Yellow:** Input 1 active
	1.3	**Yellow**: Input 2 active
	1.4	**Yellow**: Input 3 active
	2.1	**Yellow**: Input 4 active
	2.2	**Yellow**: Input 5 active
	2.3	**Yellow**: Input 6 active
	2.4	**Yellow**: Input 7 active
	3.1	**Yellow**: Input 8 active
	3.2	**Yellow**: Input 9 active
	3.3	**Yellow**: Input 10 active
	3.4	**Yellow**: Input 11 active
	4.1	**Yellow**: Input 12 active
	4.2	**Yellow**: Input 13 active
	4.3	**Yellow**: Input 14 active
	4.4	**Yellow**: Input 15 active

For error messages refer to Section 12, LED Indicators and Troubleshooting.

Figure 80: Block Diagram EP-153F

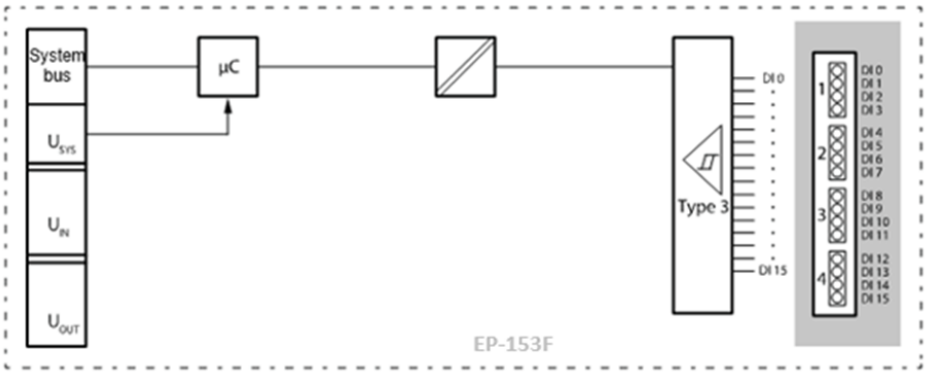

5.7.2 Specifications EP-153F

Specification	Description
System data	
Data	Process, parameter and diagnostic data depend on the network adapter used (refer to Section, Order and Arrangement of Modules
Interface	RSTi-EP I/O communication bus
System bus transfer rate	48 Mbps
Inputs	
Number	16
Sensor types	N-Switching, comparable to Type 1 and Type 3 sensors as per IEC 61131-2
Input filter	Input delay 3ms
Low input voltage	< 5 V
High input voltage	> 11 V
Sensor supply	No
Sensor connection	1-conductor
Reverse polarity protection	Yes
Module diagnosis	Yes
Individual channel diagnosis	No
Supply	
Supply voltage	20.4V – 28.8V
Current consumption from system current path ISYS	8 mA
Current consumption from input current path IIN	52mA
General data	
Weight	88 g (3.10 oz)

5.7.3 Diagnostic Data EP-153F

Name	Bytes	Bit	Description	Default
Error indicator	0	0	Module error	
		1	Internal error	
		2	External error	
		3	Channel error	0
		4	Error	
		5	Reserved	0
		6	Reserved	0
		7	Parameter error	
Module type	1	0	Module Type	0x0F
		1		
		2		
		3		
		4	Reserved	0
		5	Reserved	0

Name	Bytes	Bit	Description	Default
		6	Reserved	0
		7	Reserved	0
Error byte 2	2	0-7	Reserved	0
Error byte 3	3	0-2	Reserved	0
		3	Internal diagnostic FIFO full	0
		4-7	Reserved	0
Channel type	4	0-6	Channel type	0x70
		7	Reserved	0
Diagnostic bits per channel	5		Number of diagnostic bit per channel	0
Number of channels	6		Number of similar channels per module	0
Channel error	7-10	0-31	Reserved	0
Channel 0 error to Channel 31 error	11 to 42	0–7	Reserved	0
Time stamp	43-46		Time stamp [µs] (32-bit)	

5.7.4 Process[4] Data Inputs EP-153F

Byte	Bit	Description
IB0	IX0.0	DI0
	IX0.1	DI1
	IX0.2	DI2
	IX0.3	DI3
	IX0.4	DI4
	IX0.5	DI5
	IX0.6	DI6
	IX0.7	DI7
IB1	IX1.0	DI8
	IX1.1	DI9
	IX1.2	DI10
	IX1.3	DI11
	IX1.4	DI12
	IX1.5	DI13
	IX1.6	DI14
	IX1.7	DI15

[4] Internal process data mapping with data format Standard. Depending on the fieldbus specification and the data format of the communicating fieldbus components the bytes and/or words can be reversed during data transfer.

5.8 Digital Output Module EP-2214

Figure 81: Digital Output Module EP-2214

Figure 82: Connection Diagram EP-2214

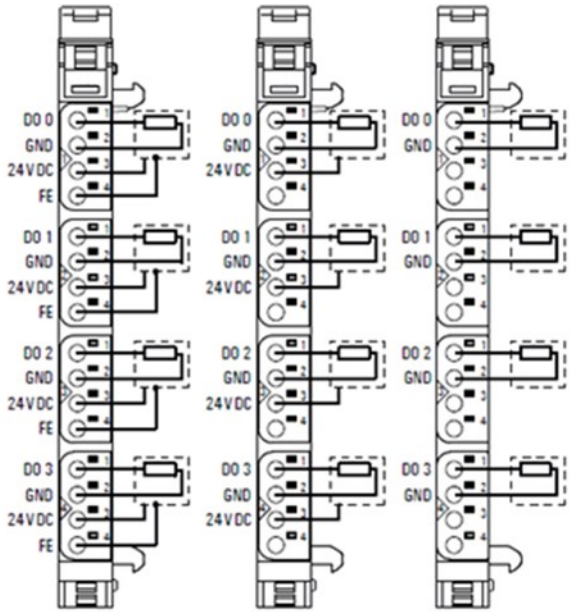

The EP-2214 digital output module can control up to 4 discrete outputs, each with a maximum of 0.5 A. One discrete output can be connected to each connector using a 2-wire, 3-wire or 3-wire connection + FE. A status LED is assigned to each channel. The outputs are supplied with power from the output current path (IOUT).

5.8.1 LED Indicators EP-2214

	Module Status	**Green**: Communication over the system bus **Red**: Module System Fault or Diagnostic Fault
	1.1	**Yellow**: Output 0 active
	1.2	--
	1.3	--
	1.4	--
	2.1	**Yellow**: Output 1 active
	2.2	--
	2.3	--
	2.4	--
	3.1	**Yellow**: Output 2 active
	3.2	--
	3.3	--
	3.4	--
	4.1	**Yellow:** Output 3 active
	4.2	--
	4.3	--
	4.4	--

For error messages refer to Section 12, LED Indicators and Troubleshooting

Figure 83: Block Diagram EP-2214

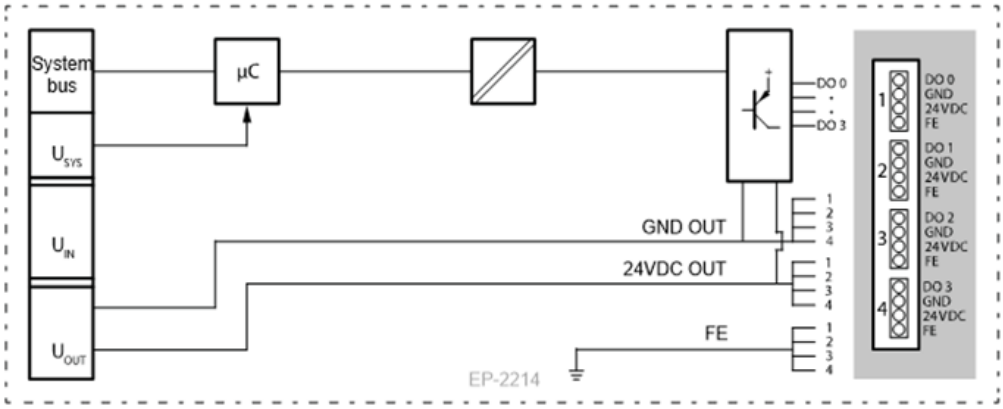

5.8.2 Specifications EP-2214

Specification	Description	
System data		
Data	Process, parameter and diagnostic data depend on the network adapter used (refer to Section, Order and Arrangement of Modules).	
Interface	RSTi-EP I/O communication bus	
System bus transfer rate	48 Mbps	
Outputs		
Number	4	
Type of load	Resistive, inductive, lamp load	
Response time	low » high max. 100µs; high » low max. 250µs	
Max. output current	per channel	0.5 A
	per module	2 A
Breaking energy (inductive)	150 mJ per channel	
Switching frequency	Resistive load (min. 47Ω)	1 kHz
	Inductive load (DC 13)	0.2 Hz without free-wheeling diode 1 kHz with suitable free-wheeling diode
	Lamp load (12 W)	1 kHz
Actuator connection	2-wire, 3-wire, 3-wire + FE	
Actuator supply	max. 2 A per plug, total max. 8 A	
Short-circuit-proof	Yes	
Protective circuit	Constant current with thermal switch-off and automatic restart	
Response time of the current limiting circuit	< 100µs	
Module diagnosis	Yes	
Individual channel diagnosis	No	
Reactionless	Yes	
Can be used with EP-19xx	Yes	
Supply		
Supply voltage	20.4V – 28.8V	
Current consumption from system current path ISYS	8 mA	
Current consumption from output current path IOUT	20 mA + load	
General data		
Weight	86 g (3.03 oz)	
For additional general data, refer to Section, General Technical Data for I/O Modules.		

5.8.3 Modifiable Parameters for EP-2214

Channel	Description	Options	Default
0 - 3	Substitute Value	Off (0) / On (1)	Off

5.8.4 Diagnostic Data EP-2214

Name	Bytes	Bit	Description	Default
Error indicator	0	0	Module error	
		1	Internal error	
		2	External error	
		3	Channel error	0
		4	Error	
		5	Reserved	0
		6	Reserved	0
		7	Parameter error	
Module type	1	0	Module Type	0x0F
		1		
		2		
		3		
		4	Reserved	0
		5	Reserved	0
		6	Reserved	0
		7	Reserved	0
Error byte 2	2	0-7	Reserved	0
Error byte 3	3	0-2	Reserved	0
		3	Internal diagnostic FIFO full	0
		4-7	Reserved	0
Channel type	4	0-6	Channel type	0x72
		7	Reserved	0
Diagnostic bits per channel	5		Number of diagnostic bit per channel	0
Number of channels	6		Number of similar channels per module	4
Channel error	7-10	0-31	Reserved	0
Channel 0 error to Channel 31 error	11 to 42	0–7	Reserved	0
Time stamp	43-46		Time stamp [µs] (32-bit)	

5.8.5 Process Data Outputs EP-2214

Byte	Bit	Description
OB0	OX0.0	DO0
	OX0.1	DO1
	OX0.2	DO2
	OX0.3	DO3
	OX0.4	reserved
	OX0.5	reserved
	OX0.6	reserved
	OX0.7	reserved

5.9 Digital Output Module EP-2614

Figure 84: Digital Output Module EP-2614

Figure 85: Connection Diagram EP-2614

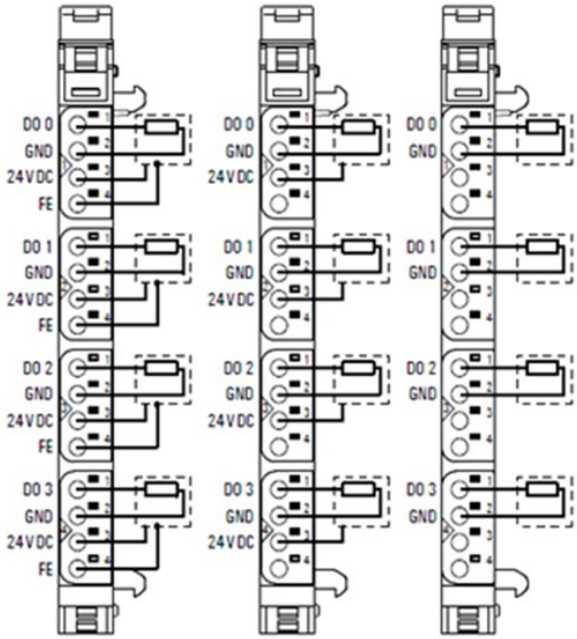

The digital output module EP-2614 can control up to 4 discrete outputs, each with a maximum of 2 A. One discrete output can be connected to each connector using a 2-wire, 3-wire or 3-wire connection + FE. A status LED is assigned to each channel. The outputs are supplied with power from the output current path (IOUT).

5.9.1 LED Indicators EP-2614

	Module Status	**Green**: Communication over the system bus **Red**: Module System Fault or Diagnostic Fault
	1.1	**Yellow**: Output 0 active
	1.2	--
	1.3	--
	1.4	--
	2.1	**Yellow**: Output 1 active
	2.2	--
	2.3	--
	2.4	--
	3.1	**Yellow**: Output 2 active
	3.2	--
	3.3	--
	3.4	--
	4.1	**Yellow:** Output 3 active
	4.2	--
	4.3	--
	4.4	--

For error messages refer to Section 12, LED Indicators and Troubleshooting.

Figure 86: Block Diagram EP-2614

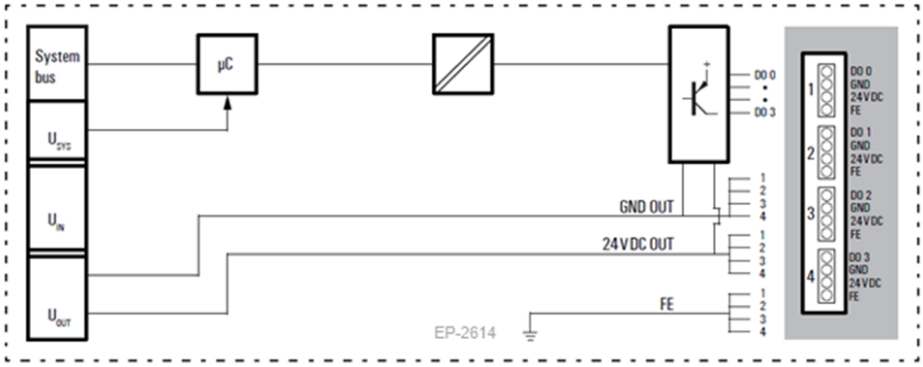

5.9.2 Specifications EP-2614

Specification	Description	
System data		
Data	Process, parameter and diagnostic data depend on the network adapter used (refer to Section, Order and Arrangement of Modules).	
Interface	RSTi-EP I/O communication bus	
System bus transfer rate	48 Mbps	
Outputs		
Number	4	
Type of load	ohmic, inductive, lamp load	
Response time	low » high max. 100µs; high » low max. 250µs	
Max. output current	per channel	2 A
	per module	8 A
Breaking energy (inductive)	150 mJ per channel	
Switching frequency	Resistive load (min. 47Ω)	1 kHz
	Inductive load (DC 13)	0.2 Hz without free-wheeling diode 1 kHz with suitable free-wheeling diode
	Lamp load (12 W)	1 kHz
Actuator connection	2-wire, 3-wire, 3-wire + FE	
Actuator supply	max. 2 A per plug, total max. 8 A	
Short-circuit-proof	Yes	
Protective circuit	Constant current with thermal switch-off and automatic restart	
Response time of the current limiting circuit	< 100µs	
Module diagnosis	Yes	
Individual channel diagnosis	No	
Can be used with EP-19xx	Yes	
Supply		
Supply voltage	20.4V – 28.8V	
Current consumption from system current path ISYS	8 mA	
Current consumption from output current path IOUT	25 mA + load	
General data		
Weight	86 g (3.03 oz)	
For additional general data, refer to Section, General Technical Data for I/O Modules		

5.9.3 Modifiable Parameters for EP-2614

Channel	Description	Options	Default
0 - 3	Substitute value	Off (0) / On (1)	Off

5.9.4 Diagnostic Data EP-2614

Name	Bytes	Bit	Description	Default
Error indicator	0	0	Module error	
		1	Internal error	
		2	External error	
		3	Channel error	0
		4	Error	
		5	Reserved	0
		6	Reserved	0
		7	Parameter error	
Module type	1	0	Module Type	0x0F
		1		
		2		
		3		
		4	Reserved	0
		5	Reserved	0
		6	Reserved	0
		7	Reserved	0
Error byte 2	2	0-7	Reserved	0
Error byte 3	3	0-2	Reserved	0
		3	Internal diagnostic FIFO full	0
		4-7	Reserved	0
Channel type	4	0-6	Channel type	0x72
		7	Reserved	0
Diagnostic bits per channel	5		Number of diagnostic bit per channel	0
Number of channels	6		Number of similar channels per module	4
Channel error	7-10	0-31	Reserved	0
Channel 0 error to Channel 31 error	11 to 42	0–7	Reserved	0
Time stamp	43-46		Time stamp [µs] (32-bit)	

5.9.5 Process Data Outputs EP-2614

Byte	Bit	Description
OB0	OX0.0	DO0
	OX0.1	DO1
	OX0.2	DO2
	OX0.3	DO3
	OX0.4	reserved
	OX0.5	reserved
	OX0.6	reserved
	OX0.7	reserved

5.10 Digital Output Module EP-2634

Figure 87: Digital Output Module EP-2634

Figure 88: Connection Diagram EP-2634

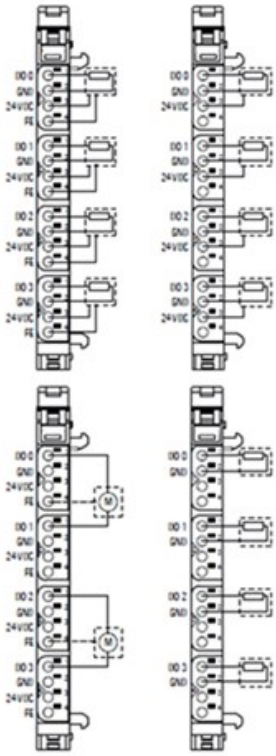

The digital output module EP-2634 can control up to 4 discrete outputs each with a maximum of 2 A. One discrete output can be connected to each connector in a 2-wire or 3-wire + FE connection. A status LED is assigned to each channel. The outputs are supplied with power from the output current path (IOUT).

Each channel can be switched between positive and negative switching. This allows, among other things, a switch in rotational direction if an DC motor is connected between two outputs. For this purpose, an output byte is reserved for the physical outputs, and each channel is assigned two bits in this byte. The switching characteristics of each output are set in the low nibble of the byte. If a bit is set, the corresponding channel has positive switching, if it is 0 then it has negative switching. The outputs are switched in the high nibble. Example:

If you write the value 185 decimal (1011 1001 binary) in the output byte, channel 1 is set to 24 V, channel 2 is set to GND, channel 3 is deactivated and channel 4 is set to 24 V.

The module is protected against external voltages between 0 V and the operating voltage.

5.10.1 LED Indicators EP-2634

Module Status	**Green**: Communication over the system bus **Red**: Module System Fault or Diagnostic Fault
1.1	**Yellow**: Output 0 active
1.2	--
1.3	--
1.4	--
2.1	**Yellow:** Output 1 active
2.2	--
2.3	--
2.4	--
3.1	**Yellow**: Output 2 active
3.2	--
3.3	--
3.4	--
4.1	**Yellow**: Output 3 active
4.2	--
4.3	--
4.4	--

For error messages refer to Section 12, LED Indicators and Troubleshooting

Figure 89: Block Diagram EP-2634

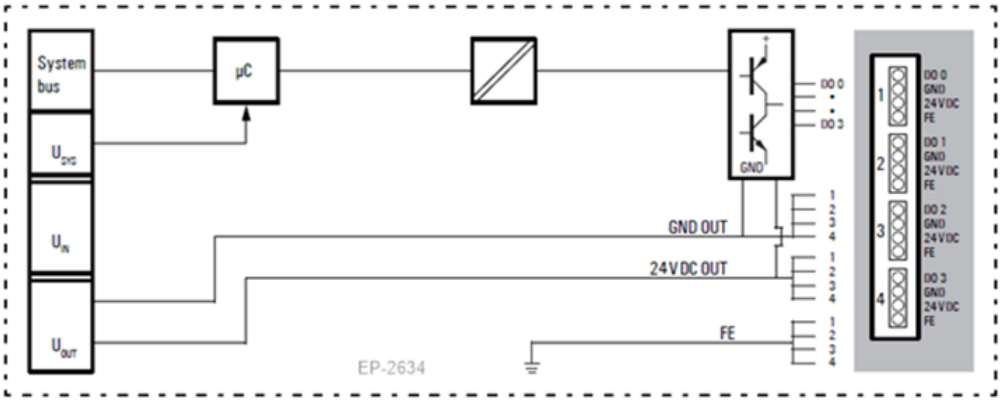

5.10.2 Specifications EP-2634

Specification	Description	
System data		
Data	Process, parameter and diagnostic data depend on the network adapter used (refer to Section 3.1, Order and Arrangement of Modules).	
Interface	RSTi-EP I/O communication bus	
System bus transfer rate	48 Mbps	
Outputs		
Number	4	
Type of load	ohmic, inductive, lamp load	
Response time	low » high max. 100µs; high » low max. 250µs	
Max. output current	per channel	2 A
	per module	8 A
Breaking energy (inductive)	150 mJ per channel	
Switching frequency	Resistive load (min. 47Ω)	1 kHz
	Inductive load (DC 13)	0.2 Hz without free-wheeling diode 1 kHz with suitable free-wheeling diode
	Lamp load (12 W)	1 kHz
Actuator connection	2-wire, 3-wire, 3-wire + FE	
Actuator supply	max. 2 A per plug, total max. 8 A	
Short-circuit-proof	Yes	
Protective circuit	Constant current with thermal switch-off and automatic restart	
Response time of the current limiting circuit	< 100µs	
Module diagnosis	Yes	
Individual channel diagnosis	No	
Reactionless	Yes	
Can be used with EP-19xx	Yes	
Supply		
Supply voltage	20.4V – 28.8V	
Current consumption from system current path ISYS	8 mA	

Current consumption from output current path IOUT	20 mA + load
General data	
Weight	86 g (3.03 oz)
For additional general data, refer to Section, General Technical Data for I/O Modules.	

5.10.3 Modifiable Parameters for EP-2634

Channel	Description	Options	Default
0 - 3	Substitute value OP-Mode	Sinking (0) / Sourcing (1)	Sourcing
0 - 3	Substitute value	Off (0) / On (1)	Off

5.10.4 Diagnostic Data EP-2634

Name	Bytes	Bit	Description	Default
Error indicator	0	0	Module error	
		1	Internal error	
		2	External error	
		3	Channel error	0
		4	Error	
		5	Reserved	0
		6	Reserved	0
		7	Parameter error	
Module type	1	0	Module Type	0x0F
		1		
		2		
		3		
		4	Reserved	0
		5	Reserved	0
		6	Reserved	0
		7	Reserved	0
Error byte 2	2	0-7	Reserved	0
Error byte 3	3	0-2	Reserved	0
		3	Internal diagnostic FIFO full	0
		4-7	Reserved	0
Channel type	4	0-6	Channel type	0x72
		7	Reserved	0
Diagnostic bits per channel	5		Number of diagnostic bit per channel	0
Number of channels	6		Number of similar channels per module	4
Channel error	7-10	0-31	Reserved	0
Channel 0 error to Channel 31 error	11 to 42	0–7	Reserved	0
Time stamp	43-46		Time stamp [µs] (32-bit)	

5.10.5 Process Data Outputs EP-2634

Byte	Format	Name	Remark
OB0	OX0.0	OP-mode DO0	0: Sinking, 1: Sourcing
	OX0.1	OP-mode DO1	0: Sinking, 1: Sourcing
	OX0.2	OP-mode DO2	0: Sinking, 1: Sourcing
	OX0.3	OP-mode DO3	0: Sinking, 1: Sourcing
	OX0.4	DO0	
	OX0.5	DO1	
	OX0.6	DO2	
	OX0.7	DO3	

5.11 Digital Output Module EP-2218

Figure 90: Digital Output Module EP-2218

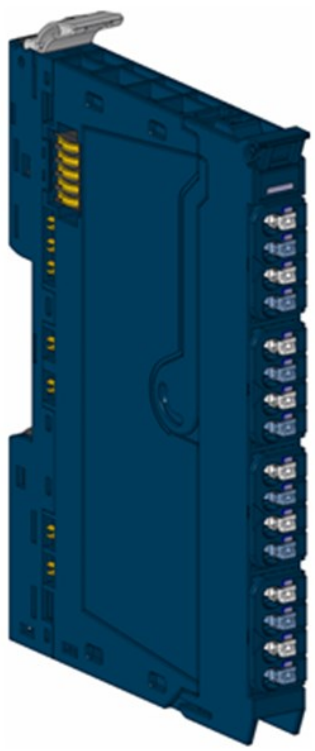

Figure 91: Connection Diagram EP-2218

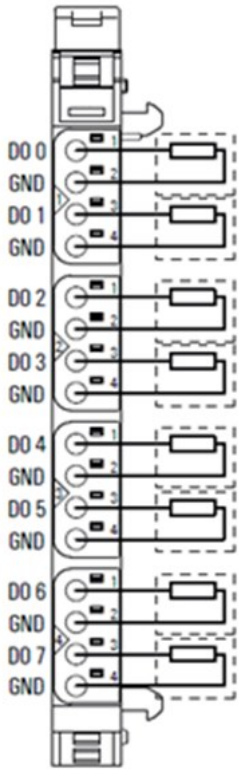

The EP-2218 digital output module can control up to 8 discrete outputs, each with a maximum of 0.5A. Discrete outputs can be connected to each connector in a 2-wire connection. A status LED is assigned to each channel. The outputs are supplied with power from the output current path (IOUT).

5.11.1 LED Indicators EP-2218

	Module Status	**Green**: Communication over the system bus **Red:** Module System Fault or Diagnostic Fault
	1.1	**Yellow**: Output 0 active

	1.2	--
	1.3	**Yellow**: Output 1 active
	1.4	--
	2.1	**Yellow:** Output 2 active
	2.2	--
	2.3	**Yellow**: Output 3 active
	2.4	--
	3.1	**Yellow**: Output 4 active
	3.2	--
	3.3	**Yellow**: Output 5 active
	3.4	--
	4.1	**Yellow:** Output 6 active
	4.2	--
	4.3	**Yellow**: Output 7 active
	4.4	--

For error messages refer to Section 12, LED Indicators and Troubleshooting.

Figure 92: Block Diagram EP-2218

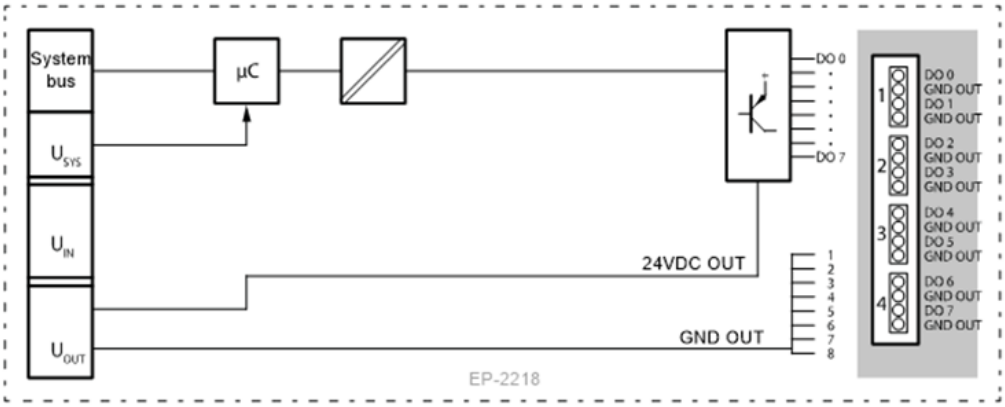

5.11.2 Specifications EP-2218

Specification	Description	
System data		
Data	Process, parameter and diagnostic data depend on the network adapter used (refer to Section 3.1, Order and Arrangement of Modules).	
Interface	RSTi-EP I/O communication bus	
System bus transfer rate	48 Mbps	
Outputs		
Number	8	
Type of load	ohmic, inductive, lamp load	
Response time	low » high max. 100µs; high » low max. 250µs	
Max. output current	per channel	0.5 A
	per module	4 A
Breaking energy (inductive)	150 mJ per channel	
Switching frequency	Resistive load (min. 47Ω)	1 kHz
	Inductive load (DC 13)	0.2 Hz without free-wheeling diode 1 kHz with suitable free-wheeling diode
	Lamp load (12 W)	1 kHz
Actuator connection	2-wire	
Short-circuit-proof	Yes	
Protective circuit	Constant current with thermal switch-off and automatic restart	
Response time of the current limiting circuit	< 100µs	
Module diagnosis	Yes	
Individual channel diagnosis	No	
Reactionless	Yes	
Supply		
Supply voltage	20.4V – 28.8V	
Current consumption from system current path ISYS	8 mA	
Current consumption from output current path IOUT	35 mA + load	
General data		
Weight	86 g (3.03 oz)	
For additional general data, refer to Section, General Technical Data for I/O Modules.		

5.11.3 Modifiable Parameters for EP-2218

Channel	Description	Options	Default
0 - 7	Substitute value	Off (0) / On (1)	Off (0)

5.11.4 Diagnostic Data EP-2218

Name	Bytes	Bit	Description	Default
Error indicator	0	0	Module error	
		1	Internal error	

Name	Bytes	Bit	Description	Default
		2	External error	
		3	Channel error	0
		4	Error	
		5	Reserved	0
		6	Reserved	0
		7	Parameter error	
Module type	1	0	Module Type	0x0F
		1		
		2		
		3		
		4	Reserved	0
		5	Reserved	0
		6	Reserved	0
		7	Reserved	0
Error byte 2	2	0-7	Reserved	0
Error byte 3	3	0-2	Reserved	0
		3	Internal diagnostic FIFO full	0
		4-7	Reserved	0
Channel type	4	0-6	Channel type	0x72
		7	Reserved	0
Diagnostic bits per channel	5		Number of diagnostic bit per channel	0
Number of channels	6		Number of similar channels per module	8
Channel error	7-10	0-31	Reserved	0
Channel 0 error to Channel 31 error	11 to 42	0–7	Reserved	0
Time stamp	43-46		Time stamp [µs] (32-bit)	

5.11.5 Process Data Outputs EP-2218

Byte	Bit	Description
OB0	OX0.0	DO0
	OX0.1	DO1
	OX0.2	DO2
	OX0.3	DO3
	OX0.4	DO4
	OX0.5	DO5
	OX0.6	DO6
	OX0.7	DO7

5.12 Digital Output Module EP-225F

Figure 93: Digital Output Module EP-225F

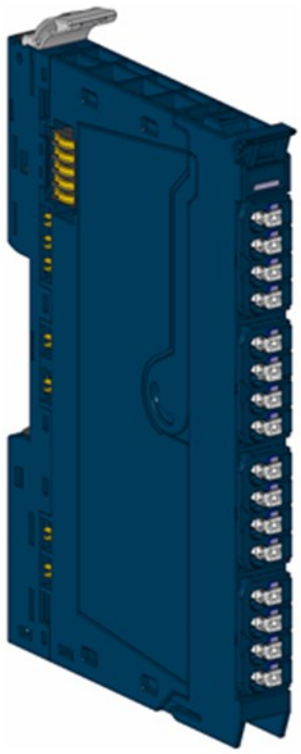

Figure 94: Connection Diagram EP-225F

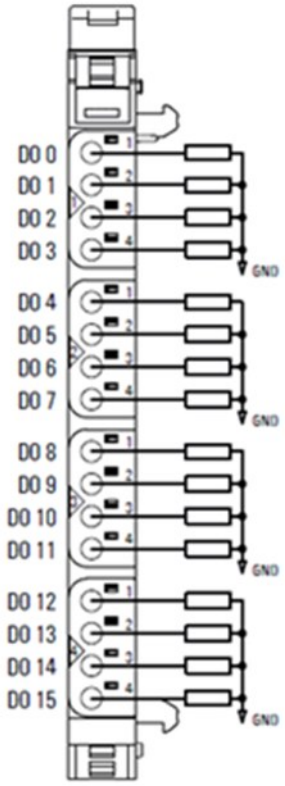

The EP-225F digital output module can control up to 16 discrete outputs, each with a maximum of 0.5 A. Four discrete outputs can be connected to each connector. A status LED is assigned to each channel. The outputs are supplied with power from the output current path (IOUT).

5.12.1 LED Indicators EP-225F

	Module Status	**Green**: Communication over the system bus **Red**: Module System Fault or Diagnostic Fault
	1.1	**Yellow**: Output 0 active
	1.2	**Yellow**: Output 1 active
	1.3	**Yellow**: Output 2 active
	1.4	**Yellow**: Output 3 active
	2.1	**Yellow**: Output 4 active
	2.2	**Yellow**: Output 5 active
	2.3	**Yellow**: Output 6 active
	2.4	**Yellow**: Output 7 active
	3.1	**Yellow**: Output 8 active
	3.2	**Yellow**: Output 9 active
	3.3	**Yellow**: Output 10 active
	3.4	**Yellow**: Output 11 active
	4.1	**Yellow**: Output 12 active
	4.2	**Yellow**: Output 13 active
	4.3	**Yellow**: Output 14 active
	4.4	**Yellow**: Output 15 active

For error messages refer to Section 12, LED Indicators and Troubleshooting.

Figure 95: Block Diagram EP-225F

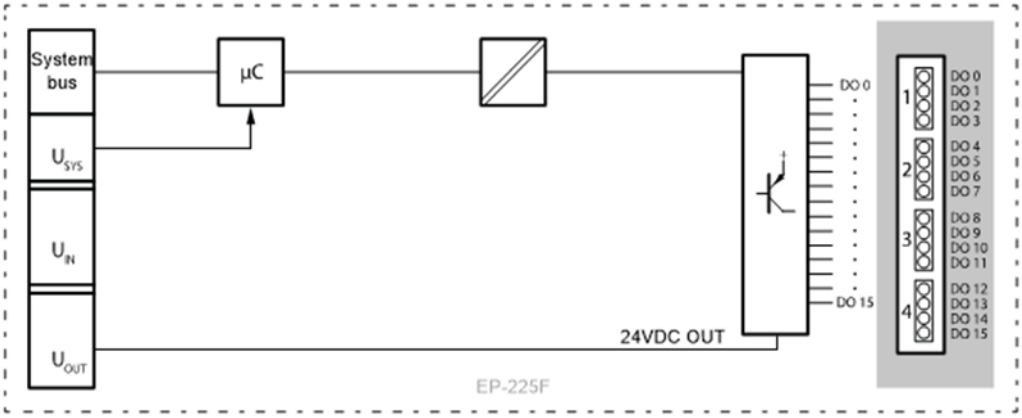

5.12.2 Specifications: EP-225F

Specification	Description	
System data		
Data	Process, parameter and diagnostic data depend on the network adapter used (refer to Section, Order and Arrangement of Modules).	
Interface	RSTi-EP I/O communication bus	
System bus transfer rate	48 Mbps	
Outputs		
Number	16	
Type of load	ohmic, inductive, lamp load	
Response time	low » high max. 100µs; high » low max. 250µs	
Max. output current	per channel	0.5 A
	per module	8 A
Breaking energy (inductive)	150 mJ per channel	
Switching frequency	Resistive load (min. 47Ω)	1 kHz
	Inductive load (DC 13)	0.2 Hz without free-wheeling diode 1 kHz with suitable free-wheeling diode
	Lamp load (12 W)	1 kHz
Actuator connection	1-conductor	
Short-circuit-proof	Yes	
Protective circuit	Constant current with thermal switch-off and automatic restart	
Response time of the current limiting circuit	< 100µs	
Module diagnosis	Yes	
Individual channel diagnosis	No	
Reactionless	Yes	
Supply		
Supply voltage	20.4V – 28.8V	
Current consumption from system current path ISYS	8 mA	
Current consumption from output current path IOUT	25 mA + load	
General data		
Weight	83 g (2.93 oz)	
For additional general data, refer to Section, General Technical Data for I/O Modules.		

5.12.3 Diagnostic Data EP-225F

Name	Bytes	Bit	Description	Default
Error indicator	0	0	Module error	
		1	Internal error	
		2	External error	
		3	Channel error	0
		4	Error	
		5	Reserved	0
		6	Reserved	0
		7	Parameter error	
Module type	1	0	Module Type	0x0F
		1		
		2		
		3		
		4	Reserved	0
		5	Reserved	0
		6	Reserved	0
		7	Reserved	0
Error byte 2	2	0-7	Reserved	0
Error byte 3	3	0-2	Reserved	0
		3	Internal diagnostic FIFO full	0
		4-7	Reserved	0
Channel type	4	0-6	Channel type	0x72
		7	Reserved	0
Diagnostic bits per channel	5		Number of diagnostic bit per channel	0
Number of channels	6		Number of similar channels per module	0
Channel error	7-10	0-31	Reserved	0
Channel 0 error to Channel 31 error	11 to 42	0–7	Reserved	0
Time stamp	43-46		Time stamp [µs] (32-bit)	

5.12.4 Process† Data Outputs EP-225F

Byte	Bit	Description
OB0	OX0.0	DO0
	OX0.1	DO1
	OX0.2	DO2
	OX0.3	DO3
	OX0.4	DO4
	OX0.5	DO5
	OX0.6	DO6
	OX0.7	DO7
OB1	OX1.0	DO8
	OX1.1	DO9
	OX1.2	DO10
	OX1.3	DO11
	OX1.4	DO12
	OX1.5	DOI13
	OX1.6	DO14
	OX1.7	DO15

† Internal process data mapping with data format “Standard”. Depending on the fieldbus specification and the data format of the communicating fieldbus components the bytes and/or words can be reversed during data transfer.

5.13 Digital Output Module EP-2814

Figure 96: Digital Output Module EP 2814

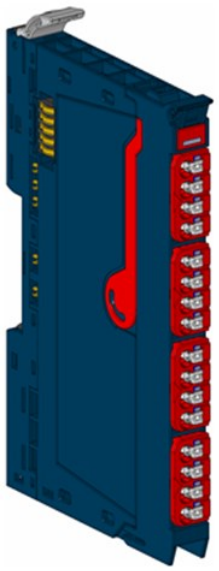

Figure 97: Connection Diagram EP-2814

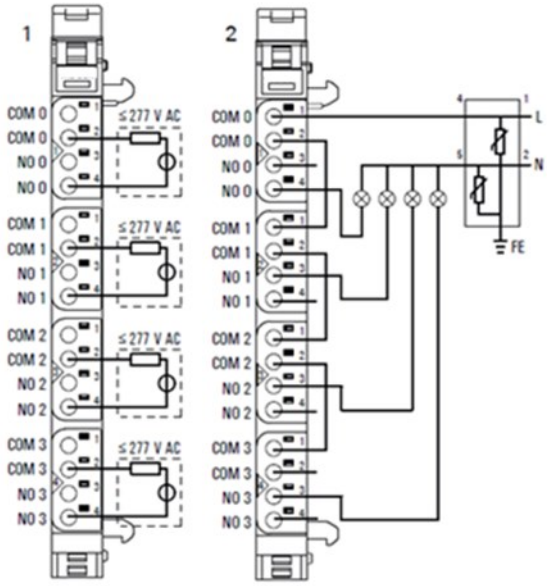

The solid-state relay output module EP-2814 uses four semiconductor switches to control up to 4 discrete outputs, each with a maximum of 1A at 255Vac. The switching characteristics of the semiconductor switch have it as being closed when the voltage crosses zero and open when the current crosses zero. Each connector features a potential-free NO (Normally Open) contact.

For protection against extreme disturbance level, use surge protection terminals with varistor (refer to the connection diagram).

5.13.1 LED Indicators EP-2814

Module Status	**Green**: Communication over the system bus **Red**: Module System Fault or Diagnostic Fault
1.1	**Yellow**: Output 0 active
1.2	--
1.3	--
1.4	--
2.1	**Yellow**: Output 4 active
2.2	--
2.3	--
2.4	--
3.1	**Yellow:** Output 8 active
3.2	--
3.3	--
3.4	--
4.1	**Yellow**: Output 12 active
4.2	--
4.3	--
4.4	--

For error messages refer to Section 12, LED Indicators and Troubleshooting

Figure 98: Block Diagram EP-2814

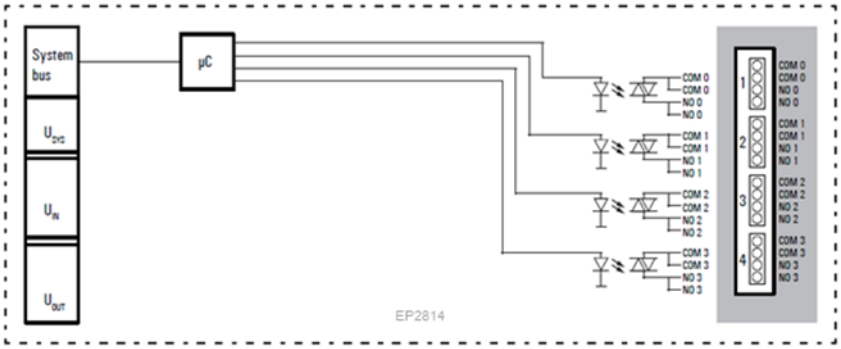

5.13.2 Specifications EP-2814

Specification	Description	
System data		
Data	Process, parameter and diagnostic data depend on the network adapter used (refer to Section, Order and Arrangement of Modules).	
Interface	RSTi-EP I/O communication bus	
System bus transfer rate	48 Mbps	
Outputs		
Number	4	
Type	SSR / triac	
Switching characteristic	closing when the voltage crosses zero, opening when the current crosses zero	
Response time	10ms	
Minimum switching current	per channel	50 mA
Maximum switching current	per channel	1A
	per module	4 A
Holding current	25 mA	
Installation	external surge voltage protection circuit recommended for overvoltage category II and overvoltage category III	
Switching frequency	up to 20 Hz	
Actuator connection	1-conductor	
Short-circuit-proof	No	
Defined trip behavior of the prescribed external fuse	1 A super quick-acting	
Module diagnosis	Yes	
Individual channel diagnosis	No	
Maximum switching voltage	255Vac, UL: 277 AC	
Reactionless	Yes	
Supply		
Supply voltage	20.4V – 28.8V	
Current consumption from system current path ISYS	11 mA	
General data		
Weight	83 g (2.93 oz)	
For additional general data, refer to Section, General Technical Data for I/O Modules.		

5.13.3 Modifiable Parameters for EP-2814

Channel	Description	Options	Default
0 - 3	Substitute value	Off (0) / On (1)	Off (0)

5.13.4 Diagnostic Data EP-2814

Name	Bytes	Bit	Description	Default
Error indicator	0	0	Module error	
		1	Internal error	

Name	Bytes	Bit	Description	Default
		2	External error	
		3	Channel error	0
		4	Error	
		5	Reserved	0
		6	Reserved	0
		7	Parameter error	
Module type	1	0	Module Type	0x0F
		1		
		2		
		3		
		4	Reserved	0
		5	Reserved	0
		6	Reserved	0
		7	Reserved	0
Error byte 2	2	0-7	Reserved	0
Error byte 3	3	0-2	Reserved	0
		3	Internal diagnostic FIFO full	0
		4-7	Reserved	0
Channel type	4	0-6	Channel type	0x72
		7	Reserved	0
Diagnostic bits per channel	5		Number of diagnostic bit per channel	0
Number of channels	6		Number of similar channels per module	4
Channel error	7-10	0-31	Reserved	0
Channel 0 error to Channel 31 error	11 to 42	0–7	Reserved	0
Time stamp	43-46		Time stamp [µs] (32-bit)	

5.13.5 Process Data Outputs EP-2814

Byte	Bit	Description
OB0	OX0.0	DO0
	OX0.1	DO1
	OX0.2	DO2
	OX0.3	DO3
	OX0.4	reserved
	OX0.5	reserved
	OX0.6	reserved
	OX0.7	reserved

5.14 Digital Output Module EP-2714

Figure 99: Digital Relay Output Module EP-2714

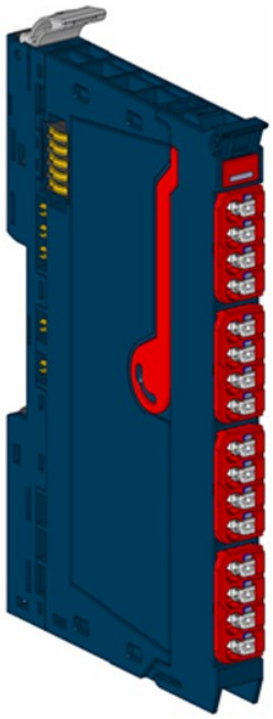

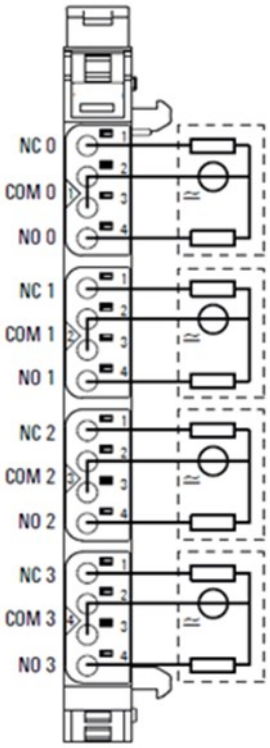

Figure 100: Connection Diagram EP-2714

The digital relay output module EP-2714 can control up to 4 discrete outputs, each with a maximum of 6A. Each connector features a potential-free changeover contact. The relay coils are supplied with power from the output current path (I_{OUT}).

⚠CAUTION

When using relay modules EP-2714 in explosive atmosphere:

- Condensation shall be avoided.
- If the switching voltage exceeds 63 V, a transient protection device shall be provided that, limits the transients to a peak voltage of 500V or less.

5.14.1 LED Indicators EP-2714

	Module Status	**Green**: Communication over the system bus **Red**: Module System Fault or Diagnostic Fault
	1.1	**Yellow**: Output 0 active
	1.2	--
	1.3	--
	1.4	--
	2.1	**Yellow**: Output 1 active
	2.2	--
	2.3	--
	2.4	--
	3.1	**Yellow**: Output 2 active
	3.2	--
	3.3	--
	3.4	--
	4.1	**Yellow**: Output 3 active
	4.2	--
	4.3	--
	4.4	--

For error messages refer to Section 12LED Indicators and Troubleshooting.

Figure 101: Derating Curve EP-2714

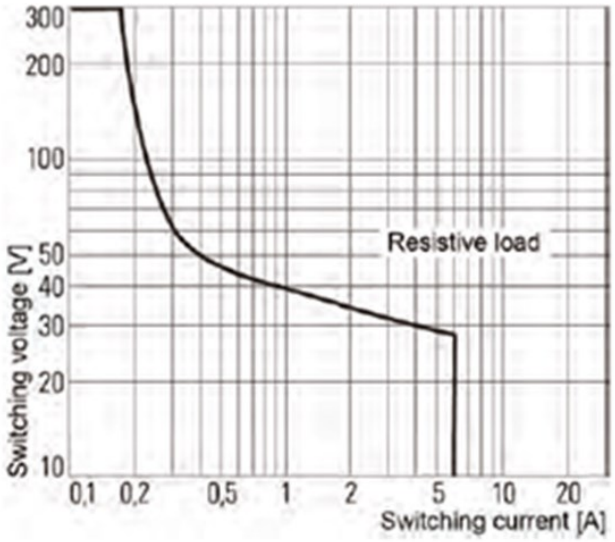

Figure 102: Block Diagram EP-2714

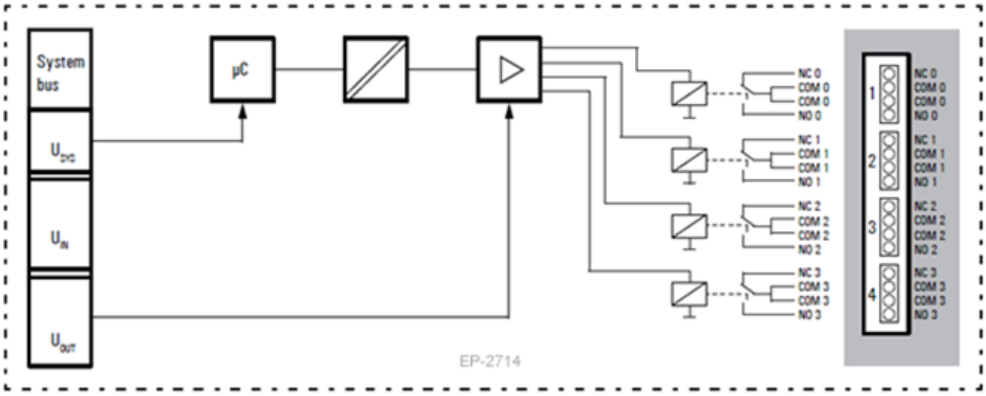

5.14.2 Specifications EP-2714

Specification	Description	
System data		
Data	Process, parameter and diagnostic data depend on the network adapter used (refer to Section, Order and Arrangement of Modules).	
Interface	RSTi-EP I/O communication bus	
System bus transfer rate	48 Mbps	
Outputs		
Number	4	
Type	CO contact	
Material for power and data contacts	Ni-Au, 3 µm	
Response time	20ms	
Maximum output current	per channel	5 A at 60°C (140 °F) / 6 A at 55°C (131 °F)
	per module	20 A at 60°C (140 °F) / 24 A at 55°C (131 °F)
Switching frequency	max. 5 Hz	
Short-circuit-proof	No	
Protective circuit	External fusing with 6 A prescribed	
Service life with AC-15 load and 1-A switching current	> 300.000 switching cycles	
Module diagnosis	Yes	
Individual channel diagnosis	No	
Maximum switching voltage	255Vac, UL: 277 AC, DC corresponding to the derating curve	
Reactionless	Yes	
Supply		
Supply voltage	20.4V – 28.8V	
Current consumption from system current path ISYS	8 mA	
Current consumption from output current path IOUT	20 mA	
General data		
Weight	83 g (2.93 oz)	

Specification	Description
For additional general data, refer to Section, General Technical Data for I/O Modules.	

5.14.3 Modifiable Parameters for EP-2714

Channel	Description	Options	Default
0 - 3	Substitute value	Off (0) / On (1)	Off (0)

5.14.4 Diagnostic Data EP-2714

Name	Bytes	Bit	Description	Default
Error indicator	0	0	Module error	
		1	Internal error	
		2	External error	
		3	Channel error	0
		4	Error	
		5	Reserved	0
		6	Reserved	0
		7	Parameter error	
Module type	1	0	Module Type	0x0F
		1		
		2		
		3		
		4	Reserved	0
		5	Reserved	0
		6	Reserved	0
		7	Reserved	0
Error byte 2	2	0-7	Reserved	0
Error byte 3	3	0-2	Reserved	0
		3	Internal diagnostic FIFO full	0
		4-7	Reserved	0
Channel type	4	0-6	Channel type	0x72
		7	Reserved	0
Diagnostic bits per channel	5		Number of diagnostic bit per channel	0
Number of channels	6		Number of similar channels per module	4
Channel error	7-10	0-31	Reserved	0
Channel 0 error to Channel 31 error	11 to 42	0–7	Reserved	0
Time stamp	43-46		Time stamp [µs] (32-bit)	

5.14.5 Process Data Outputs EP-2714

Byte	Bit	Description
OB0	OX0.0	DO0
	OX0.1	DO1
	OX0.2	DO2
	OX0.3	DO3
	OX0.4	reserved
	OX0.5	reserved
	OX0.6	reserved
	OX0.7	reserved

5.15 Digital Output Module EP-291F

Figure 103: Digital Output Module EP-291F

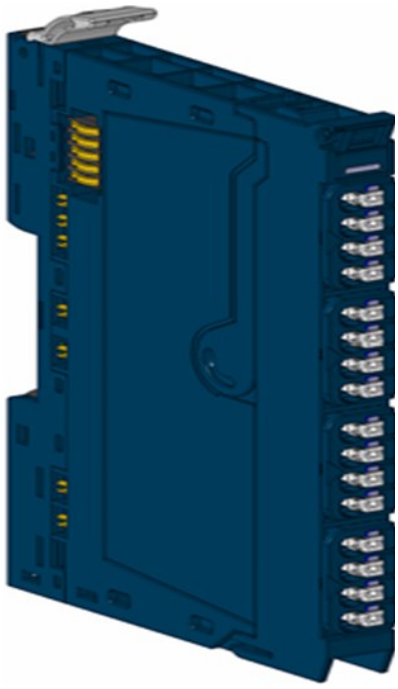

Figure 104: Connection Diagram EP-291F

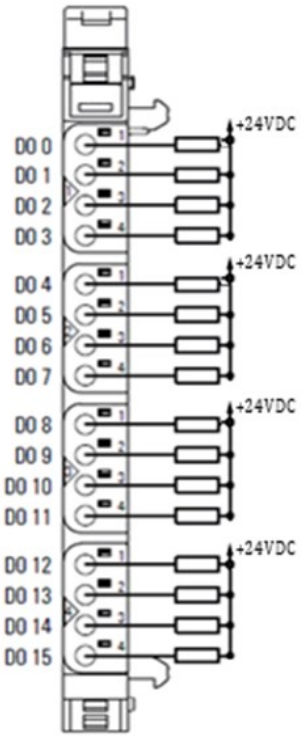

The EP-291F digital output module can control up to 16 discrete outputs, each with a maximum of 0.5 A. Four discrete outputs can be connected to each connector. The outputs are N-Switching. A status LED is assigned to each channel. The outputs are supplied with power from the output current path (IOUT).

5.15.1 LED Indicators EP-291F

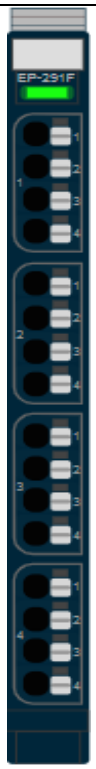	**Module Status**	**Green:** Communication over the system bus **Red**: Module System Fault or Diagnostic Fault
	1.1	**Yellow**: Output 0 active
	1.2	**Yellow:** Output 1 active
	1.3	**Yellow:** Output 2 active
	1.4	**Yellow:** Output 3 active
	2.1	**Yellow:** Output 4 active
	2.2	**Yellow:** Output 5 active
	2.3	**Yellow**: Output 6 active
	2.4	**Yellow:** Output 7 active
	3.1	**Yellow**: Output 8 active
	3.2	**Yellow**: Output 9 active
	3.3	**Yellow**: Output 10 active
	3.4	**Yellow**: Output 11 active
	4.1	**Yellow**: Output 12 active
	4.2	**Yellow**: Output 13 active
	4.3	**Yellow**: Output 14 active
	4.4	**Yellow**: Output 15 active

For error messages refer to Section 12 LED Indicators and Troubleshooting.

Figure 105: Block Diagram EP-291F

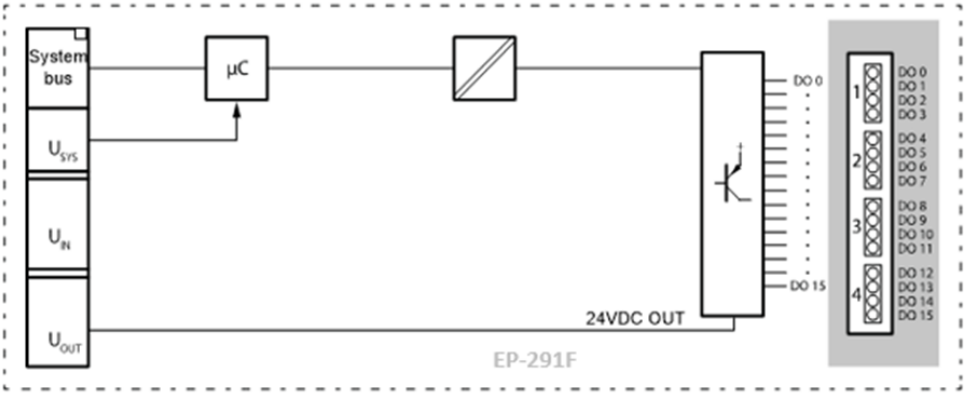

5.15.2 Specifications: EP-291F

Specification	Description	
System data		
Data	Process, parameter and diagnostic data depend on the network adapter used (refer to Section, Order and Arrangement of Modules).	
Interface	RSTi-EP I/O communication bus	
System bus transfer rate	48 Mbps	
Outputs		
Number	16	
Type of load	ohmic, inductive, lamp load	
Response time	low » high max. 100µs; high » low max. 250µs	
Max. output current	per channel	0.5 A
	per module	8 A
Breaking energy (inductive)	150 mJ per channel	
Switching frequency	Resistive load (min. 47Ω)	1 kHz
	Inductive load (DC 13)	0.2 Hz without free-wheeling diode 1 kHz with suitable free-wheeling diode
	Lamp load (12 W)	1 kHz
Actuator connection	1-conductor	
Short-circuit-proof	Yes	
Protective circuit	Constant current with thermal switch-off and automatic restart	
Response time of the current limiting circuit	< 100µs	
Module diagnosis	Yes	
Individual channel diagnosis	No	
Reactionless	Yes	
Can be used with EP-19xx	Yes	
Supply		
Supply voltage	20.4V – 28.8V	
Current consumption from system current path ISYS	8 mA	
Current consumption from output current path IOUT	30 mA + load	
General data		
Weight	89 g (3.14 oz)	
For additional general data, refer to Section, General Technical Data for I/O Modules.		

5.15.3 Diagnostic Data EP-291F

Name	Bytes	Bit	Description	Default
Error indicator	0	0	Module error	
		1	Internal error	
		2	External error	
		3	Channel error	0
		4	Error	
		5	Reserved	0
		6	Reserved	0
		7	Parameter error	
Module type	1	0	Module Type	0x0F
		1		
		2		
		3		
		4	Reserved	0
		5	Reserved	0
		6	Reserved	0
		7	Reserved	0
Error byte 2	2	0-7	Reserved	0
Error byte 3	3	0-2	Reserved	0
		3	Internal diagnostic FIFO full	0
		4-7	Reserved	0
Channel type	4	0-6	Channel type	0x72
		7	Reserved	0
Diagnostic bits per channel	5		Number of diagnostic bit per channel	0
Number of channels	6		Number of similar channels per module	0
Channel error	7-10	0-31	Reserved	0
Channel 0 error to Channel 31 error	11 to 42	0–7	Reserved	0
Time stamp	43-46		Time stamp [µs] (32-bit)	

5.15.4 Process† Data Outputs EP-291F

Byte	Bit	Description
OB0	OX0.0	DO0
	OX0.1	DO1
	OX0.2	DO2
	OX0.3	DO3
	OX0.4	DO4
	OX0.5	DO5
	OX0.6	DO6
	OX0.7	DO7
OB1	OX1.0	DO8
	OX1.1	DO9
	OX1.2	DO10
	OX1.3	DO11
	OX1.4	DO12
	OX1.5	DOI13
	OX1.6	DO14
	OX1.7	DO15

† Internal process data mapping with data format “Standard”. Depending on the fieldbus specification and the data format of the communicating fieldbus components the bytes and/or words can be reversed during data transfer.

5.16 Digital Output Module EP-5111

Figure 106: Counter Module EP-5111 Figure 107: Connection Diagram EP-5111

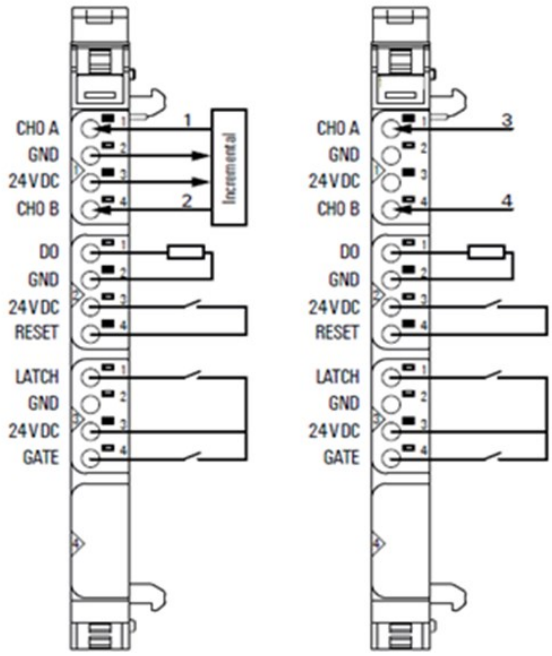

With reference to the Connection Diagram (Figure 90):

1. Track A
2. Track B
3. Cycle
4. Direction 0/1 (24 V)
    - One 32-bit counter (AB) invertible, 24Vdc
    - Counting frequency 100 kHz max (AB 1/2/4-times sampling or pulse and direction)
    - Latch value, comparison value, setting value, input filter (parametrizable)
    - HW gate reset, digital output for comparison
    - Alarm and diagnostic function with µs time stamp
    - µs time stamp for counting value (for example, for speed measurements)

The counter module EP-5111 can read one square-wave signal (1 channel) (for example, from an incremental encoder) with a maximum input frequency of 100 kHz. The 32-bit counter can count up/down within a predetermined range of values.

The counter can be controlled using software or externally through the latch, gate, and reset inputs. A digital output can be parameterized to be activated immediately upon either dropping below, meeting, or exceeding the set comparison value. An overrun time can be provided with the parameter Pulse duration. Thus, the PLC will recognize even signals succeeding extremely fast.

In mode Pulse and Direction, channel CH0 A is used as the input and channel CH0 B as a direction-determining input. In incremental mode, an incremental encoder with track A and B can be connected. A status LED is assigned to each channel. The module electronics supply the connected sensors with power from the input current path (IIN).

5.16.1 LED Indicators EP-5111

Module Status	**Green**: Communication over the system bus **Red**: Module System Fault or Diagnostic Fault
1.1	**Yellow**: A/pulse controlled
1.2	--
1.3	--
1.4	**Yellow**: B/direction controlled
2.1	**Yellow**: output set
2.2	--
2.3	--
2.4	**Yellow**: reset input controlled
3.1	**Yellow**: latch input controlled
3.2	--
3.3	--
3.4	**Yellow**: gate input (HW gate) controlled

For error messages refer to Section 12, LED Indicators and Troubleshooting

Figure 108: Block Diagram EP-5111

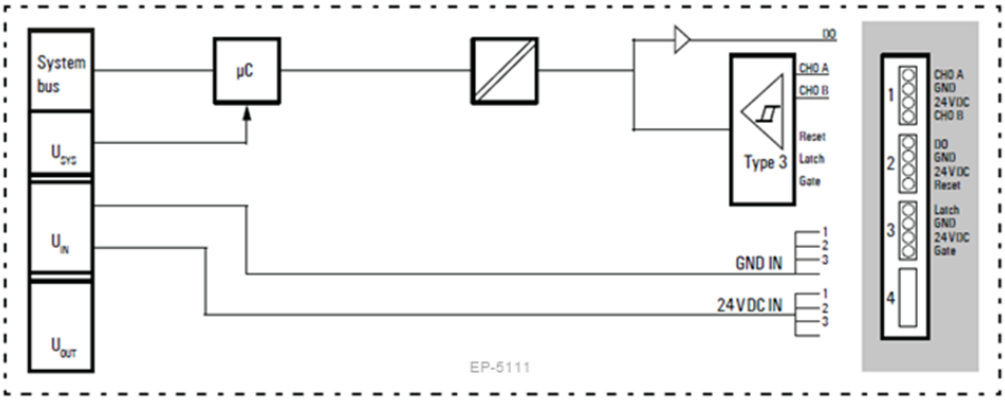

5.16.2 Specifications EP-5111

Specification	Description
System data	
Data	Process, parameter and diagnostic data depend on the network adapter used (refer to Section, Order and Arrangement of Modules).
Interface	RSTi-EP I/O communication bus
System bus transfer rate	48 Mbps
Galvanic isolation	500Vdc between the current paths
Inputs	
Number of counter inputs	1
Type	Incremental encoders and other input characteristics for sensor types 1 and 3 are in accordance with EN 61131-2
Input filter	Filter time adjustable from 0.01 to 1ms
Low input voltage	< 5 V
High input voltage	> 11 V
Max. input current per channel	3.5 mA
Sensor supply	Yes
Sensor connection	2- and 3-wire
Reverse polarity protection	Yes
Module diagnosis	Yes
Individual channel diagnosis	Yes
Counter width	32 bits
Maximum input frequency	100 kHz
Latch, gate, reset input	Yes
Mode of operation	Pulse and direction / AB mode with 1-, 2-, 4-times sampling
Status, alarm, diagnostics	
Status indicator	Yes
Process alarm	Yes, parametrizable
Diagnostic alarm	Yes
Outputs	
Number	1
Output current	0.5 A
Reverse polarity protection	Yes
Module diagnosis	Yes
Individual channel diagnosis	Yes
Supply	
Supply voltage	20.4V – 28.8V
Current consumption from system current path ISYS	8 mA
Current consumption from input current path IIN	35 mA (plus output current for the digital output)
General data	
Weight	83 g (2.93 oz)
For additional general data, refer to Section, General Technical Data for I/O Modules.	

5.16.3 Modifiable Parameters for EP-5111

Channel	Description	Options	Default
	Diagnostic alarm	disabled (0) / enabled (1)	disabled
0	Filter time signal A	0.01ms [100 kHz] (0) / 0.017ms [50 kHz] (1) / 0.033ms [30 kHz] (2) / 0.1ms [10 kHz] (3) / 0.2ms [5 kHz] (4) / 0.5ms [2 kHz] (5) / 1ms [1 kHz] (6)	0.01ms
0	Filter time signal B	0.01ms [100 kHz] (0) / 0.017ms [50 kHz] (1) / 0.033ms [30 kHz] (2) / 0.1ms [10 kHz] (3) / 0.2ms [5 kHz] (4) / 0.5ms [2 kHz] (5) / 1ms [1 kHz] (6)	0.01ms
0	Filter time latch	0.01ms (0) / 0.017ms (1) / 0.033ms (2) / 0.1ms (3) / 0.2ms (4) / 0.5ms (5) / 1ms (6)	0.01ms
0	Filter time gate	0.01ms (0) / 0.017ms (1) / 0.033ms (2) / 0.1ms (3) / 0.2ms (4) / 0.5ms (5) / 1ms (6)	0.01ms
0	Filter time reset	0.01ms (0) / 0.017ms (1) / 0.033ms (2) / 0.1ms (3) / 0.2ms (4) / 0.5ms (5) / 1ms (6)	0.01ms
0	Process alarm HW gate open	disabled (0) / enabled (1)	disabled
0	Process alarm HW gate closed	disabled (0) / enabled (1)	disabled
0	Process alarm overflow	disabled (0) / enabled (1)	disabled
0	Process alarm underflow	disabled (0) / enabled (1)	disabled
0	Process alarm comp. value	disabled (0) / enabled (1)	disabled
0	Process alarm end value	disabled (0) / enabled (1)	disabled
0	Process alarm latch value	disabled (0) / enabled (1)	disabled

Channel	Description	Options	Default
0	Counting mode	count endless (0) / once - forward (1) / once - backwards (2) / once - no main direction (3) / periodic - forward (4) / periodic - backwards (5) / periodic - no main direction (6)	count endless
0	Condition for DO	disabled (0) / higher equal comparison value (1) / lower equal comparison value (2) / equal comparison value (3)	disabled
0	Counter dir. signal B inv.	disabled (0) / enabled (1)	disabled
0	Reset	disabled (0) / high level (1) / rising edge 0-1 (2)/ rising edge once 0-1 (3)	
0	Signal mode	Rotary transducer - single (0) / Rotary transducer - double (1) / Rotary transducer - quadruple (2) / Pulse and Direction (3) / disabled (4)	disabled
0	HW gate	disabled (0) / enabled (1)	disabled
0	Counter behavior internal gate	Interrupt counting (0) / Cancel counting (1)	Interrupt counting
0	End value	-2147483648 to 2147483647	2147483647
0	Load value	-2147483648 to 2147483647	0
0	Hysteresis	0 to 255	0
0	Pulse duration	0 to 255 [Input value x 2 = output time; corresponds to 0 ... 510ms]	0

Note: The parameter setting in the network adapter for the Behavior of outputs on fieldbus error affects the control word and thus the behavior of the EP-5111:

The Hold last value setting

The output continues working or switches as parametrized respectively.

The counter continues to count during the error. Once normal operating conditions have been restored, the counter continues to count starting at the previous value.

The Enable substitute value setting

The output is switched off.

The counter value is frozen. Once normal operating conditions have been restored, the counter value is reset to the parameterized load value.

The All outputs off setting

The output is switched off. The counter behaves in the same way as for Hold last value.

5.16.4 Diagnostic Data EP-5111

Name	Bytes	Bit	Description	Default
Error indicator	0	0	Module error	
		1	Internal error	
		2	External error	
		3	Channel error	
		4	External auxiliary supply error	
		5	Reserved	0
		6	Reserved	0
		7	Parameter error	
Module type	1	0	Module Type	0x08
		1		
		2		
		3		
		4	Channel information available	1
		5	Reserved	0
		6	Reserved	0
		7	Reserved	0
Error byte 2	2	0-7	Reserved	0
Error byte 3	3	0-2	Reserved	0
		3	Internal diagnostic FIFO full	
		4	Reserved	0
		5	Reserved	0
		6	Process alarm lost	
		7	Reserved	0
Channel type	4	0-6	Channel type	0x76
		7	Reserved	0
Diagnostic bits per channel	5		Number of diagnostic bit per channel	8
Number of channels	6		Number of similar channels per module	1
Channel error	7	0	Error at channel 0	
		1-7	Reserved	0
Channel error	8	8-15	Reserved	0
Channel error	9	16 - 23	Reserved	0
Channel error	10	24 - 31	Reserved	0
Channel 0 error	11	0	Hardware gate opened	
		1	Hardware gate closed	
		2	Overflow/underflow/end value	
		3	Comparison value reached	
		4	Latch value saved	
		5-7	Reserved	0

Name	Bytes	Bit	Description	Default
Channel 1 error to Channel 31 error	12 to 42	0-7	Reserved	0
Time stamp	43-46		Time stamp [µs] (32-bit)	

5.16.5 Process Data† Inputs EP-5111

Byte	Format	Name	Bit	Function when active	Remark
IB0 ... IB3	Double word	Counter value			current count value
IB4 ... IB7	Double word	Latch value			Count value image at the point of edge 0-1 at latch input
IB8	Word	Counter status	IX8.0	Reset was active	remains until reset mode is disabled
			IX8.1	DO released	
			IX8.2	SW gate active	
			IX8.3	Reset input active	depending only of the parameter reset but not of the reset mode
			IX8.4	HW gate active	
			IX8.5	internal gate active	
			IX8.6	DO set	
			IX8.7	Counter direction down	
IB9			IX9.0	Counter direction up	
			IX9.1	Comparison condition met	remains until reset of the status bits
			IX9.2	End value reached	remains until reset of the status bits
			IX9.3	Overflow performed	remains until reset of the status bits
			IX9.4	Underflow performed	remains until reset of the status bits
			IX9.5	Zero crossing performed	remains until reset of the status bits
			IX9.6	Latch input active	
			IX9.7	reserved	
IB10	Word	Time stamp			0 ... 65,535µs rotating, updated when counter value changes
IB11					
† Internal process data mapping with data format Standard. Depending on the fieldbus specification and the data format of the communicating fieldbus components the bytes and/or words can be reversed during data transfer.					

5.16.6 Process Data† Outputs EP-5111

Byte	Format	Name	Bit	Function when edge 0-1	Remark
QB0 ... QB3	Double word	Comparison value			depending on parametrization for triggering of process alarm or setting the DO, as soon as the condition is met

Byte	Format	Name	Bit	Function when edge 0-1	Remark
QB4 ... QB7	Double word	Set value			this value is copied into counter value in the event of edge 0-1 at bit 5 of the control word
QB8	Word	Counter word	QX8.0	Activate reset mode	
			QX8.1	Release DO	
			QX8.2	Set SW gate	
			QX8.3- 84	reserved	
			QX8.5	Load set value	loads set value into counter value
			QX8.6	Reset status bits	counter status bits 9.1 - 9.5
			QX8.7	reserved	
			QX9.0	Deactivate reset mode	
QB9			QX9.1	Block DO	
			QX9.2	Reset SW gate	
			QX9.3- 9.7	reserved	
† Internal process data mapping with data format Standard. Depending on the fieldbus specification and the data format of the communicating fieldbus components the bytes and/or words can be reversed during data transfer.					

5.16.7 Process Alarm Data EP-5111

Byte	Bit	Function
B0	X0.0	HW gate activated
	X0.1	HW gate deactivated
	X0.2	Overflow, underflow or end value reached
	X0.3	Comparison value reached
	X0.4	Latch value reached
	X0.5 - X0.7	reserved
B1	X1.0	Status input channel 0 A (track A)
	X1.1	Status input channel 0 B (track B)
	X1.2	Status input "Latch"
	X1.3	Status input "Gate"
	X1.4	Status input "Reset"
	X1.5- X1.7	reserved
B2		16-bit time stamp 0 ... 65,535µs, rotating
B3		

5.16.8 Setting Up the Counter

To start a counting process at least the signal mode needs to be parameterized and a rising edge at the bit QX8.2 (“Set SW gate”) of the control word is required.

You can define the counter functions by parameterizing: the counting mode, a primary direction (counting up or down), the counting behavior, and the hardware gate function (input gate). In addition, you can parameterize output setting options (comparison function, hysteresis) as well as producing a process alarm (refer to Section 5.16.10,

Additional Counter Features).

Counting Range, Count Limits

The maximum count limits are predetermined by the register size and cannot be changed.

Maximum Counting Range

Limit	Value
Lower count limit	–2 147 483 648 (–231)
Upper count limit	+2 147 483 647 (231 – 1)

5.16.9 Counter Functions

Counting Mode

Depending on the application you can chose the counting mode:

- Endless counting, for example, for position detection with a rotary encoder
- 1-time counting with or without primary direction, for example, for counting products up to a maximum limit
- Periodic counting with or without primary direction, for example, repeated identical pick-and-place operations

For both counting modes 1-time counting and periodic counting you can parameterize the counting range with load value and end value.

Via bit QX8.5 of the control word you can load a set value into the counting value. You can define the set value in the second double word of the process data outputs.

Counting Direction

No primary direction

The entire counting range is available when using a counting mode without primary direction.

Primary Direction Up

The counting range is limited at the top by a parameterized end value. Starting from 0, a set value or a parameterized load value, the counter counts until the end value -1 and is reset to the load value with the next encoder pulse.

Primary Direction Down

The counting range is limited at the bottom by a parameterized end value. Starting from 0, a set value or a parameterized load value, the counter counts until the end value +1 and is reset to the load value with the next encoder input.

Gate Function: Activate / Deactivate Counter

The counter is activated and deactivated using an internal gate. If the hardware gate (HW gate) is deactivated in the parameters, the internal gate is identical to the software gate (SW gate).

With activated hardware gate, there is a logic AND connection of SW gate and HW gate, so that the gate functions operate exclusively on the HW gate. In this case, opening and closing of the SW gate has an interrupting effect only.

The software gate is activated using a 0-1 edge at the bit Set SW gate in the control word and deactivated with a 0-1 edge at the bit Reset SW gate in the control word (refer to the table Process Data Outputs).

Counting Behavior: Cancel/Interrupt Counting

You can parameterize the counting behavior after a new gate start: Using Interrupt counting, the counter continues from the last counting value. Using Cancel counting, counting starts again from the load value.

Endless Counting

Figure 109: Continuous Counting

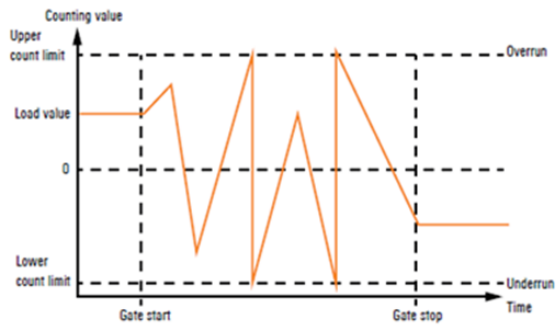

- Counting starts at the load value, the entire counting range is used.
- If the upper count limit is reached during up-counting, an additional counting pulse in the positive direction leads to a jump to the lower count limit. Counting continues from there.
- If the lower count limit is reached during down-counting, an additional counting pulse in the negative direction leads to a jump to the upper count limit. Counting continues from there.
- Upon exceeding the upper or lower counting limit, the status bit Overflow performed, or Underflow performed is set and a process alarm is triggered if it is parameterized. The status bits remain set until they are reset with the bit “Reset status bits” in the control word.

One-time Counting/ No primary Direction

Figure 110: 1-time Counting, Interrupted Counting

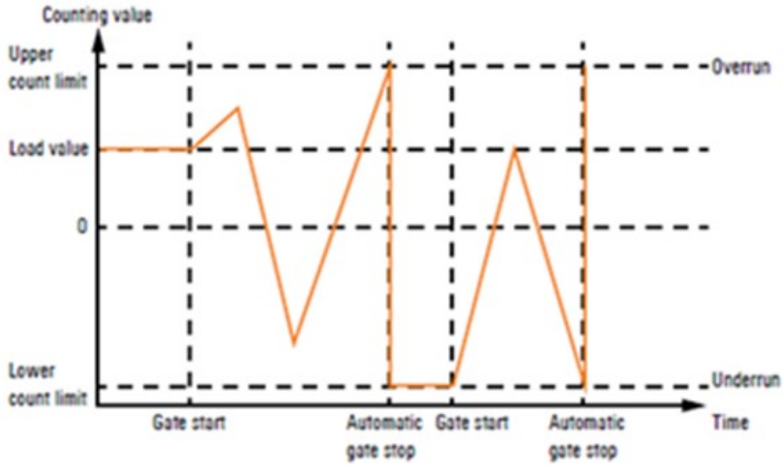

Figure 111: 1-time Counting, Cancelled Counting

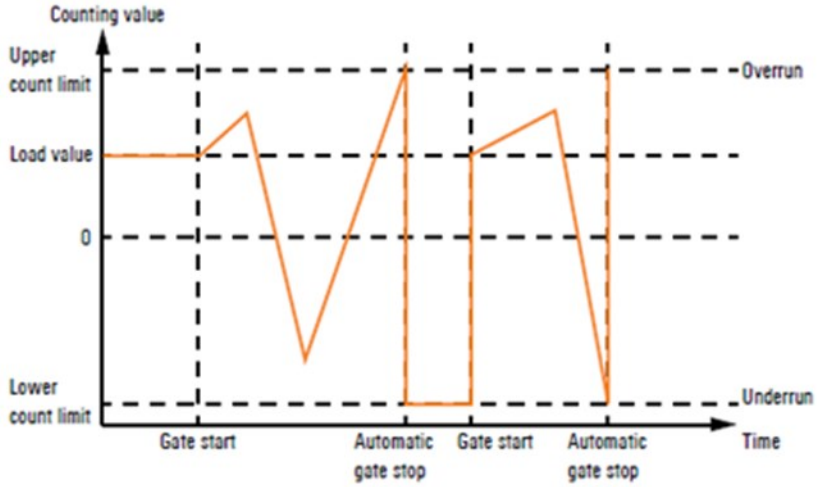

- Counting (up and down) starts at the load value, the entire counting range is used.
- Upon exceeding the upper or lower count limit, the counter jumps to the other count limit respectively. The internal gate is automatically closed, the status bit Overflow performed, or Underflow performed is set and a process alarm will be triggered if it is parameterized.
- To restart counting, the internal gate must be reopened. Depending on the parameters set, counting continues from the current counting value (Interrupt counting) or it starts again from the load value (Cancel counting).

One-time Counting / Primary Direction Up

Figure 112: 1-time Counting, Primary Direction Up

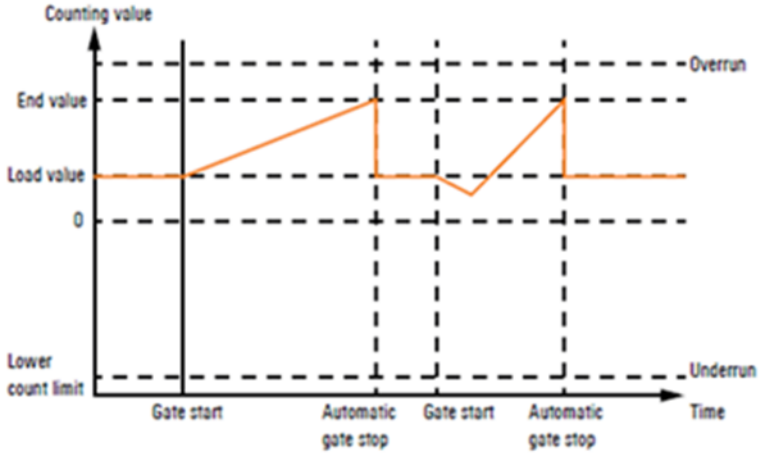

- Up-counting starts at the load value.
- If the parameterized end value -1 is reached during counting in the positive direction, the counter jumps back to the load value at the next positive count pulse. The internal

gate is automatically closed, the status bit End value reached is set and a process alarm will be triggered if it is parameterized.

- To restart counting, the internal gate must be reopened. Counting starts again at the load value.
- Upon reaching the lower count limit the counter jumps to the upper count limit to continue counting from there. The status bit Underflow performed is set and a process alarm will be triggered if it is parameterized. All status bits remain set until they are reset with the bit Reset status bits in the control word.

Counting Range

Limits	Valid range of values
End value	–2 147 483 647 ($-2^{31}+1$) to +2 147 483 647 ($2^{31}-1$)
Upper count limit	+2 147 483 648 (2^{31})

One-time Counting/ Primary Direction Down

Figure 113: 1-time Counting, Primary Direction Down

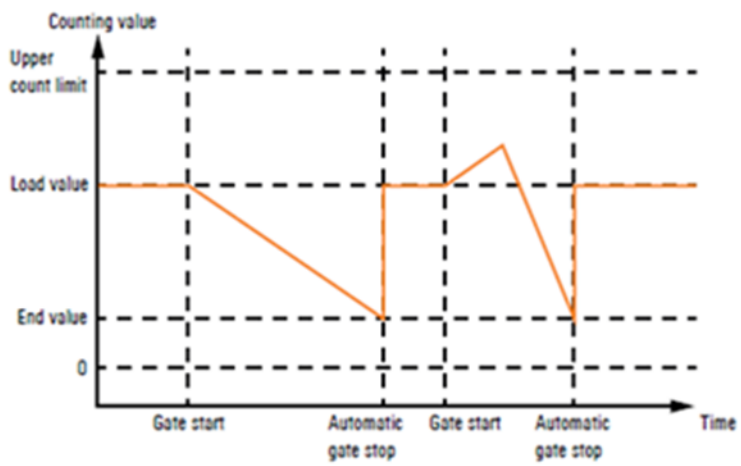

- Down-counting starts at the load value.
- If the parameterized end value +1 is reached during counting in the negative direction, the counter jumps back to the load value at the next count pulse. The internal gate is automatically closed, the status bit End value reached is set and a process alarm will be triggered if it is parameterized.
- To restart counting, the internal gate must be reopened. Counting starts again at the load value.
- Upon reaching the upper count limit the counter jumps to the lower count limit to continue counting from there. The status bit Overflow performed is set and a process alarm will be triggered if it is parameterized. All status bits remain set until they are reset with the bit Reset status bits in the control word.

Counting Range

Limits	Valid range of values
End value	–2 147 483 648 (-2^{31}) to +2 147 483 647 ($2^{31} - 2$)
Upper count limit	+2 147 483 647 (2^{31} -1)

Periodic Counting/ No Primary Direction

Figure 114: Periodic Counting, No Primary Direction

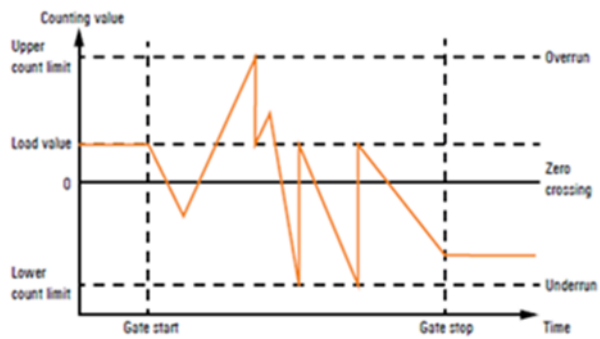

- Counting (up or down) starts at the load value, the entire counting range is used.
- Upon reaching a count limit, the counter jumps to the load value and starts counting again from there. The status bit Overflow performed, or Underflow performed is set and a process alarm will be triggered if it is parameterized. All status bits remain set until they are reset with the bit Reset status bits in the control word.

Periodic Counting/ Primary Counting Direction Up

Figure 115: Periodic Counting, Primary Counting Direction Up

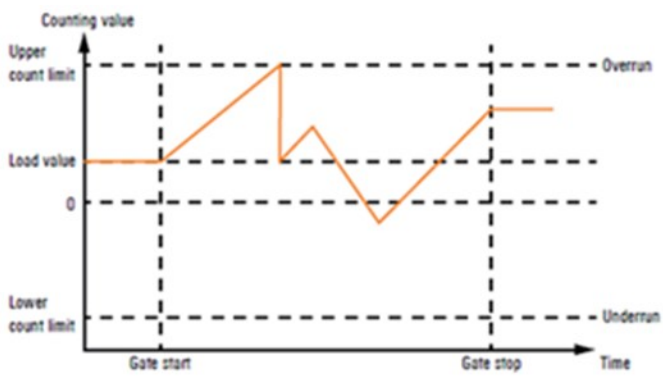

- Up-counting starts at the load value.
- If the parameterized end value -1 is reached during counting in the positive direction, the counter jumps back to the load value at the next positive count pulse and continues counting from there. The status bit End value reached is set and a process alarm will be triggered if it is parameterized.
- Upon reaching the lower count limit the counter jumps to the upper count limit to continue counting from there. The status bit Underflow performed is set and a process alarm will be triggered if it is parameterized. All status bits remain set until they are reset with the bit Reset status bits in the control word.

Counting Range

Limits	Valid range of values
End value	–2 147 483 647 (–2^{31} + 1) to +2 147 483 647 (2^{31} – 1)
Lower count limit	+2 147 483 648 (2^{31})

Periodic Counting/ Primary Direction Down

Figure 116: Periodic Counting, Primary Counting Direction Down

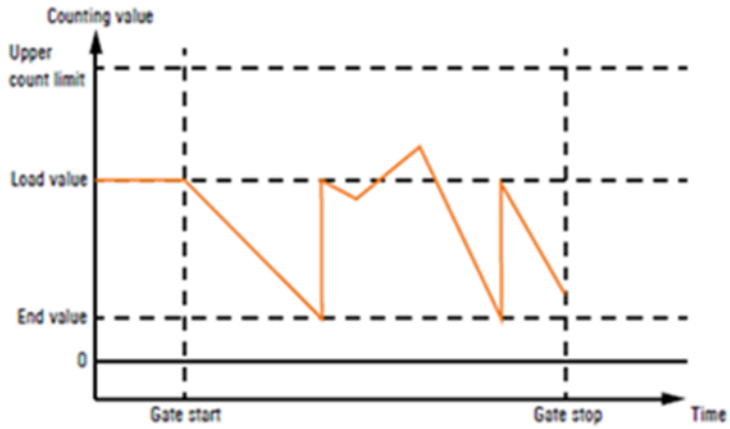

- Down-counting starts at the load value.
- If the parameterized end value +1 is reached during counting in the negative direction, the counter jumps back to the load value at the next count pulse and continues counting from there. The status bit End value reached is set and a process alarm will be triggered if it is parameterized.
- Upon reaching the upper count limit the counter jumps to the lower count limit to continue counting from there. The status bit Overflow performed is set and a process alarm will be triggered if it is parameterized. All status bits remain set until they are reset with the bit Reset status bits in the control word.

Counting Range

Limits	Valid range of values
End value	–2 147 483 647 (–2^{31}) to +2 147 483 646 (2^{31} – 2)
Upper count limit	+2 147 483 648 (2^{31} -1)

5.16.10 Additional Counter Features

You can define the additional features for the counter listed below by parameterizing or via the process data outputs:

- Reset: resets the counting value to the load value during counting.
- Latch function: stores the current counting value in the latch register.
- Comparator: Upon meeting the comparison condition, the digital output is activated, or a process alarm is triggered.
- Hysteresis: reduces frequent switching of the output and/ or excessive triggering of process alarms, e.g. when the value of a sensor signal fluctuates around the comparison value. Figure 117 illustrates how counting behavior is affected by the additional features. These additional features are explained in the following pages.

Figure 117: Additional Counter Functions

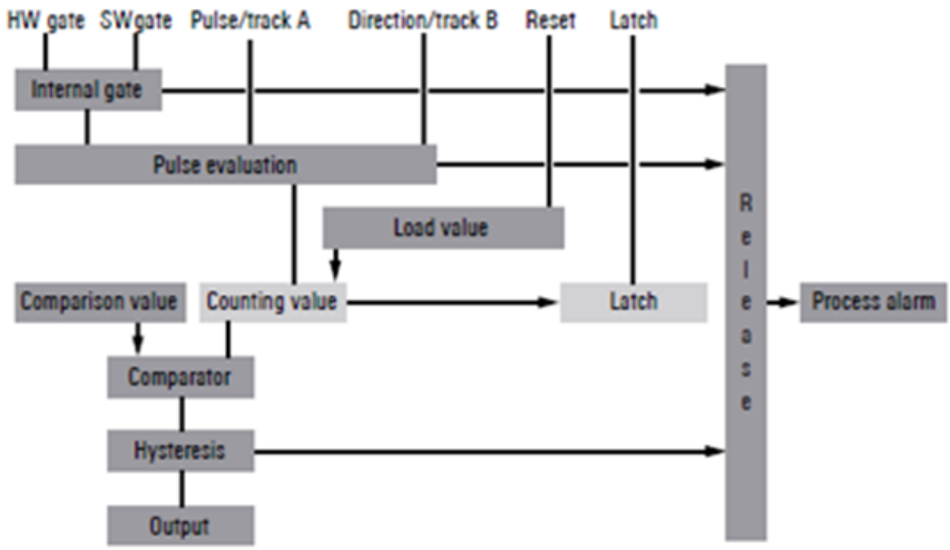

Reset

The load value will be load into the counting value once there is a signal at the reset input. To use this feature, you must release the reset mode in the control word (bit QX8.0) in addition to the parameterization.

The status bit IX8.3 indicates that there is a signal at the reset input. Once a reset is done, the status bit IX8.0 is set. This bit will be reset by deactivating the reset mode (control bit QX9.0).

Latch Function

If a 0-1 edge appears at the latch input during a counting process, the current counter value is stored in the latch register. The latch register is accessed through the process data inputs. With every activation of the counter the latch value is set to 0.

Comparison Function

Via the parameter Condition for DO you can deactivate the output (never switching) or define a comparison condition for the switching of the output:

- Counter value higher or equal comparison value
- Counter value lower or equal comparison value
- Counter value equal comparison value

To use the comparison function, you must preset the comparison value in the first double word of the process data outputs and release the digital output via the control word (bit QX8.1).

The bit IX9.1 Comparison condition met of the status word is activated as soon as the comparison condition is met. The output switches and remains set as long as the comparison condition is met accordingly to the parameterized hysteresis and pulse duration.

When using Counter value equal comparison value, the output remains set during the pulse duration parameterized. With pulse duration = 0, the output remains set until the comparison condition is not met any more. When using a counting mode with primary direction, the output will be switched only upon reaching the comparison value from the primary direction.

Pulse duration

Via the parameter Pulse duration, you can determine how long the digital output should remain set. The pulse duration can be preselected between 0 and 510ms with an inaccuracy of less than 2.048ms. With pulse duration = 0 the output behaves exclusively according to the comparison conditions.

If the comparison value is left during a pulse output and is reached again, there is no post-triggering of the pulse duration.

Note: The bit Comparison condition met is activated together with the bit DO set of the status word. In contrast to the DO set bit it remains active until it is reset with the bit Reset status bits of the control word.

Hysteresis

It is possible to reduce frequent switching of the output and/ or triggering of a process alarm, e.g. if the value of a sensor signal fluctuates around the comparison value, by setting the hysteresis. Thereby you define a range above and below a reference value (zero crossing, overflow/underflow or comparison value), within which the output will not be reset.

A limit value between 0 and 255 can be parameterized for the hysteresis. With hysteresis = 3 for example, all values differing less than 3 from the reference value are smoothed. Hysteresis is deactivated with the values 0 and 1.

The hysteresis is activated upon reaching the comparison condition. The comparison result remains unchanged during active hysteresis until the counting value reaches the predetermined hysteresis limit. After leaving the hysteresis range, hysteresis is reactivated only upon reaching the comparison condition again.

After changing the hysteresis value, an active hysteresis remains active. The new hysteresis value is active during the next hysteresis event.

The behavior of the output for hysteresis = 0 (hysteresis deactivated) and hysteresis = 3 is shown in the following diagrams (legends describe the behavior for hysteresis = 3):

Figure 118: Operating Principle of the Hysteresis when Counter Value ≥ Comparison Value, Pulse Duration 0

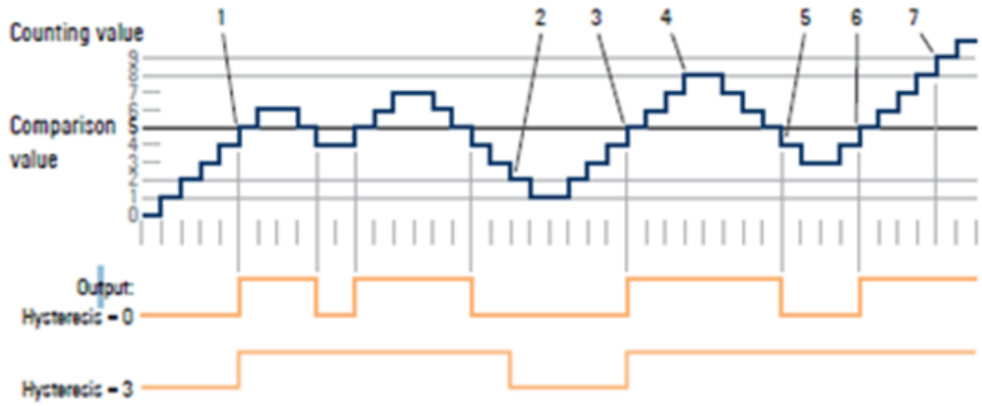

1. Comparison condition met → output is set and hysteresis activated
2. Comparison condition not met, leaving the hysteresis range → output is reset
3. Comparison condition met → output is set and hysteresis activated
4. Leaving the hysteresis range, the output remains set because the comparison condition is still met
5. Comparison condition no longer met but hysteresis still active → output remains set
6. Comparison condition met, hysteresis still active → output remains set
7. Leaving the hysteresis range and comparison condition met → output remains set

Figure 119: Operating Principle of the Hysteresis when Counter Value = Comparison Value, Pulse Duration 0

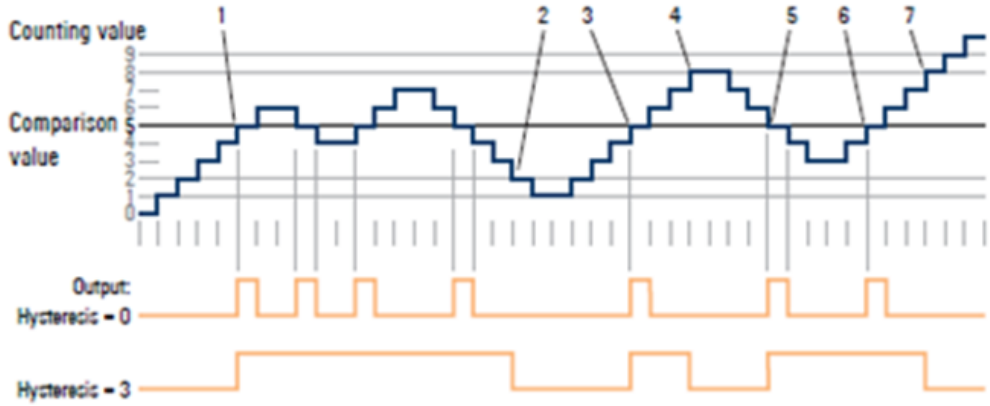

1. Comparison condition met → output is set and hysteresis activated

2. Comparison condition not met, leaving the hysteresis range → output is reset
3. Comparison condition met → output is set and hysteresis activated
4. Leaving the hysteresis range and comparison condition not met → output is reset
5. Comparison condition met → output is set and hysteresis activated
6. Comparison condition met and hysteresis active → output remains set
7. Leaving the hysteresis range and comparison condition no longer met → output is reset

Figure 120: Operating Principle of the Hysteresis when Counter Value = Comparison Value, Pulse Duration 2

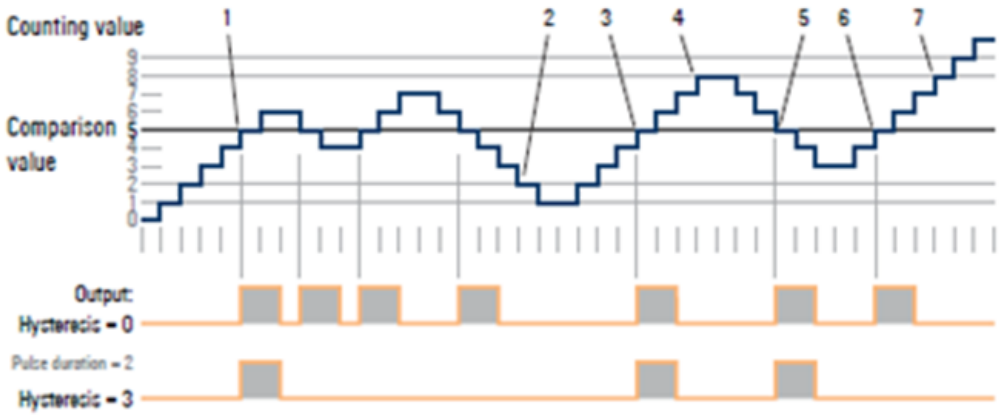

1. Comparison condition met → pulse of the parameterized duration is output, hysteresis activated
2. Leaving the hysteresis range → hysteresis deactivated
3. Comparison condition met → pulse of the parameterized duration is output, hysteresis activated
4. Leaving the hysteresis range → hysteresis deactivated
5. Comparison condition met → pulse of the parameterized duration is output, hysteresis activated
6. Comparison condition met and hysteresis active → no pulse
7. Comparison condition not met, leaving the hysteresis range → hysteresis deactivated

Figure 121: EP-5111 Counter Operation using Rotary Transducer

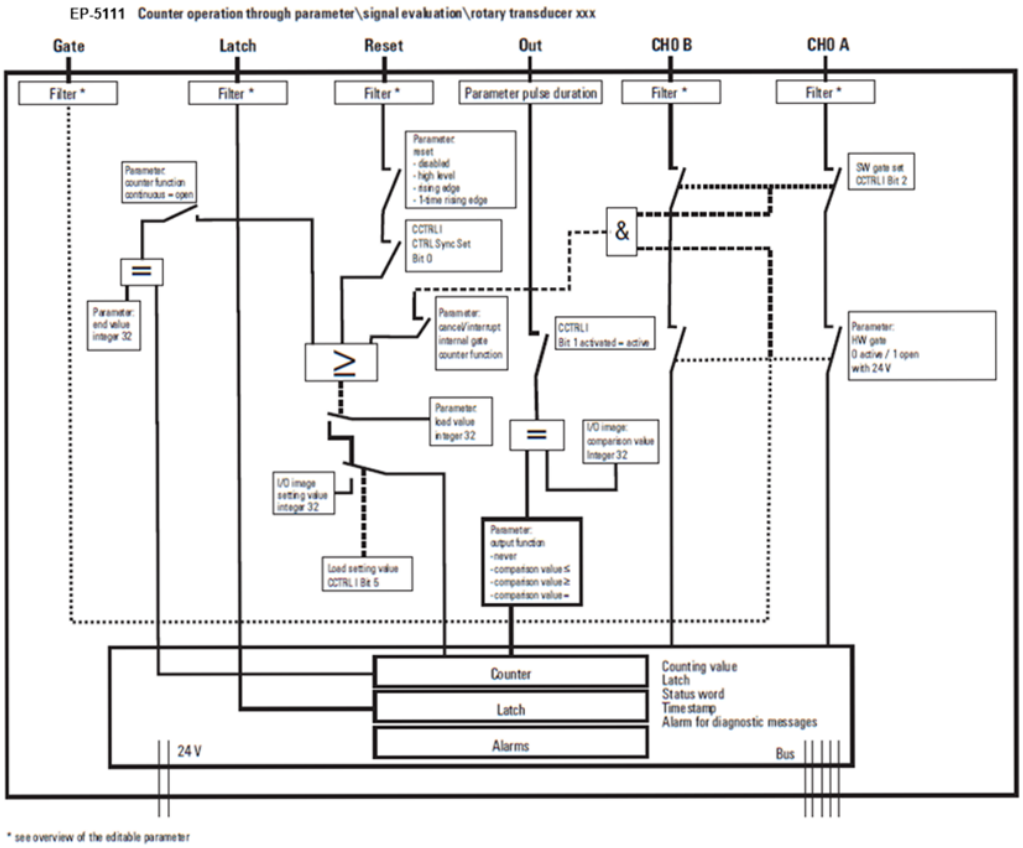

Figure 122: EP-5111 Counter Operation using Pulse/Direction (A/B)

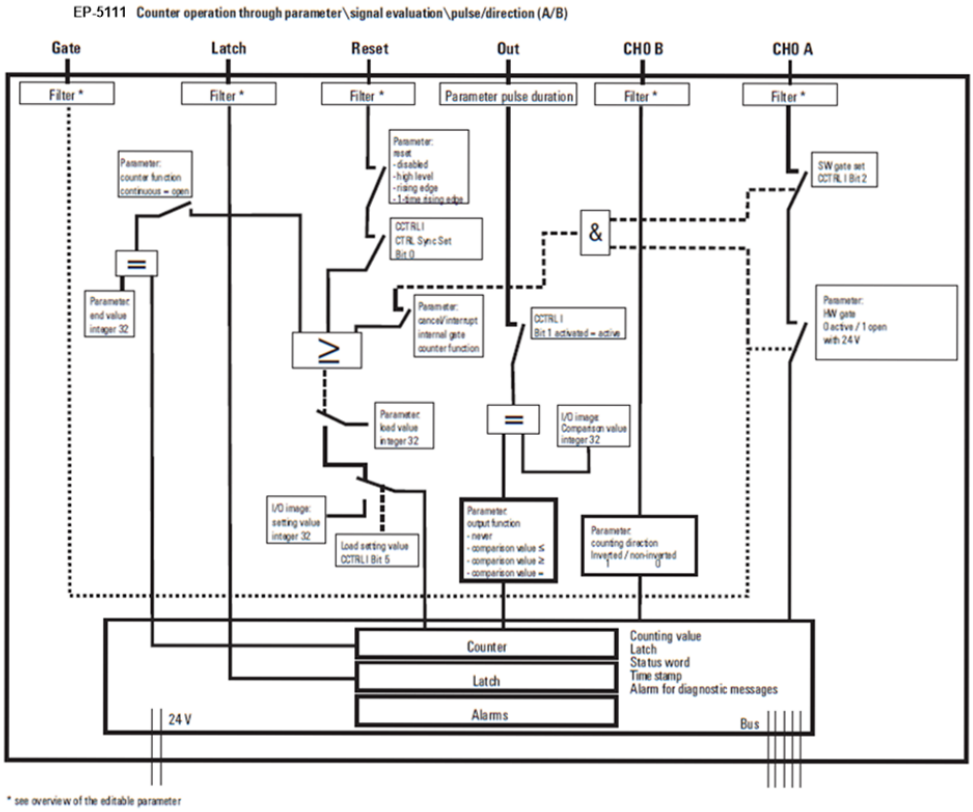

5.17 Digital Counter Module EP-5112

Figure 123: Digital Counter Module EP-5112

Figure 124: Connection Diagram EP-5112

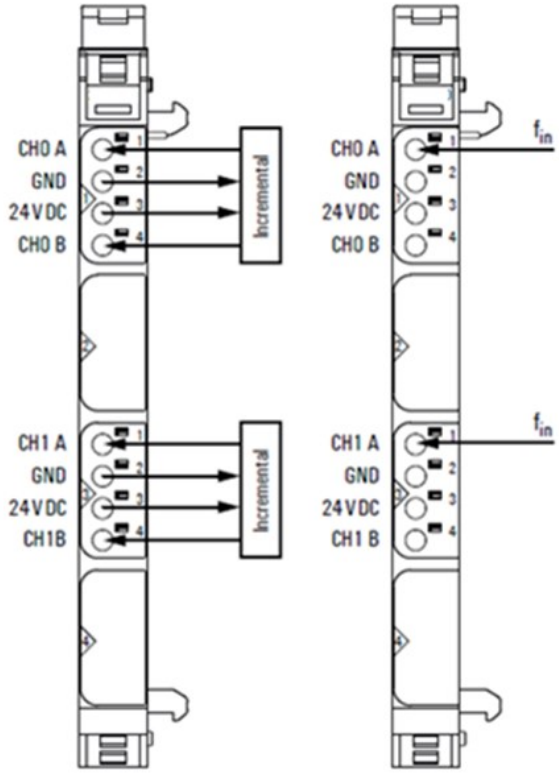

The digital counter module EP-5112 can read square-wave signals (for example, from an incremental encoder) with a maximum input frequency of 100 kHz. Depending on the operating mode, both 32-bit counters can count up/down independent of each other in a preset range of values. The counters can be controlled via software by setting the appropriate control word.

In mode Pulse and Direction, channel CH0 A and CH1 A respectively is used as the input, channel CH0 B and CH1 B respectively is used as a direction-determining input. In incremental mode, an incremental encoder with track A and B can be connected. A status LED is assigned to each channel. The module electronics supply the connected sensors with power from the input current path (IIN).

- Two 32-bit counters (AB), invertible, 24Vdc
- Counting frequency 100 kHz max (AB 1/2/4-times sampling or pulse and direction)
- Comparison value, setting value, input filter (parametrizable)
- Alarm and diagnostic function with µs time stamp
- µs time stamp for value counting (for example, for speed measurements)

5.17.1 LED indicators EP-5112

	Module Status	**Green**: Communication over the system bus **Red**: Module System Fault or Diagnostic Fault
	1.1	**Yellow**: CH0 A pulse controlled
	1.2	--
	1.3	--
	1.4	**Yellow**: CH0 B direction controlled
	2.1	
	2.2	
	2.3	
	2.4	
	3.1	**Yellow**: CH1 A pulse controlled
	3.2	--
	3.3	--
	3.4	**Yellow**: CH1 B direction controlled
	4.1	
	4.2	
	4.3	
	4.4	

For error messages refer to Section 12, LED Indicators and Troubleshooting.

Figure 125: Block Diagram EP-5112

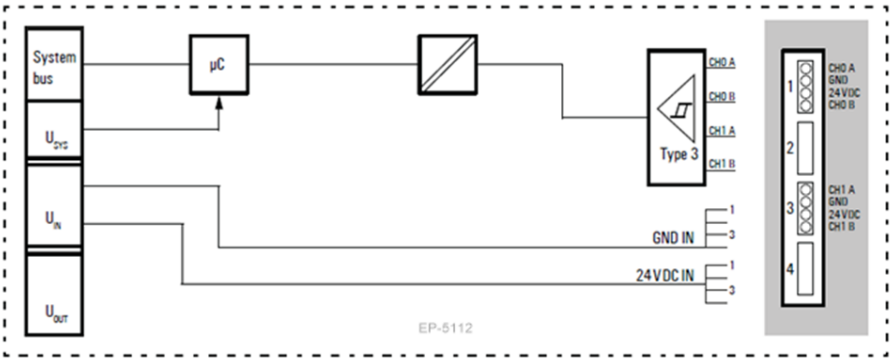

5.17.2 Specifications EP-5112

Specifications	Description
System data	
Data	Process, parameter and diagnostic data depend on the network adapter used (refer to Section, Order and Arrangement of Modules).
Interface	RSTi-EP I/O communication bus
System bus transfer rate	48 Mbps
Galvanic isolation	500Vdc between the current paths
Inputs	
Number of counter inputs	2
Type	Incremental encoder
Input filter	Filter time adjustable from 0.01 to 1ms
Low input voltage	< 5 V
High input voltage	> 11 V
Max. input current per channel	3.5 mA
Sensor supply	Yes
Sensor connection	2- and 3-wire
Reverse polarity protection	Yes
Module diagnosis	Yes
Individual channel diagnosis	Yes
Counter width	32 bits
Maximum input frequency	100 kHz
Latch, gate, reset input	Yes
Mode of operation	Pulse and direction / AB mode with 1-, 2-, 4-times sampling
Status, alarm, diagnostics	
Status indicator	Yes
Process alarm	Yes, parametrizable
Diagnostic alarm	Yes
Supply	
Supply voltage	20.4V – 28.8V
Current consumption from system current path ISYS	8 mA
Current consumption from input current path IIN	35 mA
General data	
Weight	72 g (2.54 oz)
For additional general data, refer to Section, General Technical Data for I/O Modules.	

5.17.3 Modifiable Parameters for EP-5112

Channel	Description	Options (†)	Default
	Diagnostic alarm	disabled (0) / enabled (1)	disabled
0 ... 1	Filter time signal A	0.01ms [100 kHz] (0) / 0.017ms [50 kHz] (1) / 0.033ms [30 kHz] (2) / 0.1ms [10 kHz] (3) / 0.2ms [5 kHz] (4) / 0.5ms [2 kHz] (5) / 1ms [1 kHz] (6)	0.01ms
0 ... 1	Filter time signal B	0.01ms [100 kHz] (0) / 0.017ms [50 kHz] (1) / 0.033ms [30 kHz] (2) / 0.1ms [10 kHz] (3) / 0.2ms [5 kHz] (4) / 0.5ms [2 kHz] (5) / 1ms [1 kHz] (6)	0.01ms
0 ... 1	Process alarm overflow	disabled (0) / enabled (1)	disabled
0 ... 1	Process alarm underflow	disabled (0) / enabled (1)	disabled
0 ... 1	Process alarm comp. value	disabled (0) / enabled (1)	disabled
0 ... 1	Process alarm end value	disabled (0) / enabled (1)	disabled
0 ... 1	Counting mode	count endless (0) / once - forward (1) / once - backwards (2) / once - no main direction (3) / periodic - forward (4) / periodic - backwards (5) / periodic - no main direction (6)	count endless
0 ... 1	Comparison function	disabled (0) / higher equal comparison value (1) / lower equal comparison value (2) / equal comparison value (3)	disabled
0 ... 1	Counter dir. signal B inv.	disabled (0) / enabled (1)	disabled
0 ... 1	Signal mode	Rotary transducer - single (0) / Rotary transducer - double (1) / Rotary transducer - quadruple (2) / Pulse and Direction (3) / disabled (4)	disabled
0 ... 1	Counter behavior internal gate	Interrupt counting (0) / Cancel counting (1)	interrupt counting
0 ... 1	Setting value	-2147483648 to 2147483647	0
0 ... 1	End value	-2147483648 to 2147483647	2147483647
0 ... 1	Load value	-2147483648 to 2147483647	0
0 ... 1	Hysteresis	0 to 255	0

Note: The parameter setting in the network adapter for the Behavior of outputs on fieldbus error affects the control word and thus the behavior of the EP-5112

- The Hold last value setting - The counter continues to count during the error. Once normal operating conditions have been restored, the counter continues to count starting at the previous value.
- The Enable substitute value setting - The counter value is frozen. Once normal operating conditions have been restored, the counter value is reset to the parameterized load value.
- All outputs off setting - The counter behaves in the same way as for Hold last value

5.17.4 Diagnostic Data EP-5112

Name	Bytes	Bit	Description	Default
Error indicator	0	0	Module error	
		1	Internal error	
		2	External error	
		3	Channel error	
		4	External auxiliary supply error	
		5	Reserved	0
		6	Reserved	0
		7	Parameter error	
Module type	1	0	Module Type	0x08
		1		
		2		
		3		
		4	Channel information available	1
		5	Reserved	0
		6	Reserved	0
		7	Reserved	0
Error byte 2	2	0-7	Reserved	0
Error byte 3	3	0-2	Reserved	0
		3	Internal diagnostic FIFO full	
		4	Reserved	0
		5	Reserved	0
		6	Process alarm lost	
		7	Reserved	0
Channel type	4	0-6	Channel type	0x76
		7	Reserved	0
Diagnostic bits per channel	5		Number of diagnostic bit per channel	8
Number of channels	6		Number of similar channels per module	2
Channel error	7	0	Error at channel group 0	
		1	Error at channel group 1	
		2-7	Reserved	0
Channel error	8	8 – 15	Reserved	0
Channel error	9	16 – 23	Reserved	0

Name	Bytes	Bit	Description	Default
Channel error	10	24 – 31	Reserved	0
Channel 0 error	11	0-1	Reserved	0
		2	Overflow/underflow/end value	
		3	Comparison value reached	
		4-7	Reserved	0
Channel 1 error	12	0-1	Reserved	0
		2	Overflow/underflow/end value	
		3	Comparison value reached	
		4-7	Reserved	0
Channel 2 error to Channel 31 error	13 to 42	0-7	Reserved	0
Time stamp	43-46		Time stamp [µs] (32-bit)	

5.17.5 Process Data† Inputs EP-5112

Byte	Format	Name	Bit	Function when active	Remark
IB0 ... IB3	Double word	Counter 0: Counter value			Counter 0: current count value
IB4 ... IB7	Double word	Counter 1: Counter value			Counter 1: current count value
IB8	Word	Counter 0: Counter status	IX8.0	Reserved	
			IX8.1	Comparison bit released	
			IX8.2	SW gate active	
			IX8.3-8.4	Reserved	
			IX8.5	Internal gate active	
			IX8.6	Comparison bit active	
			IX8.7	Counter direction down	
IB9			IX9.0	Counter direction up	
			IX9.1	Comparison condition met	
			IX9.2	End value reached	
			IX9.3	Overflow performed	
			IX9.4	Underflow performed	
			IX9.5	Zero crossing performed	
			IX9.6-9.7	Reserved	

Byte	Format	Name	Bit	Function when active	Remark
IB10	Word	Counter 1: Counter status	IX10.0	Reserved	
			IX10.1	Comparison bit released	
			IX10.2	SW gate active	
			IX10.3 - 10.4	Reserved	
			IX10.5	Internal gate active	
			IX10.6	Comparison bit active	
			IX10.7	Counter direction down	
IB11			IX11.0	Counter direction up	
			IX11.1	Comparison condition met	
			IX11.2	End value reached	
			IX11.3	Overflow performed	
			IX11.4	Underflow performed	
			IX11.5	Zero crossing performed	
			IX11.6 - 11.7	Reserved	

† Internal process data mapping with data format Standard. Depending on the fieldbus specification and the data format of the communicating fieldbus components the bytes and/or words can be reversed during data transfer.

5.17.6 Process Data† Outputs EP-5112

Byte	Format	Name	Bit	Function when edge 0-1	Remark
QB0 ... QB3	Double word	Counter 0: Comparison value			
QB4 ... QB7	Double word	Counter 1: Comparison value			
QB8	Word	Counter 0: Control word	QX8.0	Reserved	
			QX8.1	Release comparison bit	
			QX8.2	Set SW gate	
			QX8.3-8.4	Reserved	
			QX8.5	Load set value	Loads set value into counter value
			QX8.6	Reset status bits	Counter 0: status bits 9.1 - 9.5
			QX8.7-9.0	Reserved	
QB9			QX9.1	Deactivate comparison bit	
			QX9.2	Reset SW gate	
			QX9.3-Q9.7	Reserved	

Byte	Format	Name	Bit	Function when edge 0-1	Remark
QB10	Word	Counter 1: Control word	QX10.0	Reserved	
			QX10.1	Release comparison bit	
			QX10.2	Set SW gate	
			QX10.3 - 10.4	Reserved	
			QX10.5	Load set value	loads set value into counter value
			QX10.6	Reset status bits	Counter 1: status bits 11.1 - 11.5
QB11			QX10.7 - 11.0	Reserved	
			QX11.1	Deactivate comparison bit	
			QX11.2	Reset SW gate	
			QX11.3 - 11.7	Reserved	
† Internal process data mapping with data format "Standard". Depending on the fieldbus specification and the data format of the communicating fieldbus components the bytes and/or words can be reversed during data transfer.					

5.17.7 Process Alarms for EP 5112

Byte	Bit	Function
B0	X0.0 – 0.1	Reserved
	X0.2	Counter 0: Overflow, underflow, or end value reached
	X0.3	Counter 0: Comparison value reached
	X0.4 – 0.5	Reserved
	X0.6	Counter 1: Overflow, underflow, or end value reached
	X0.7	Counter 1: Comparison value reached.
B1	X1.0	Status Counter 0: Input Channel 0 A (Track A)
	X1.1	Status Counter 0: Input Channel 0 B (Track B)
	X1.2	Status Counter 1: Input Channel 0 A (Track A)
	X1.3	Status Counter 1: Input Channel 0 B (Track B)
	X1.4 – X1.7	Reserved
B2		16 But Time Stamp 0 ... 65535µs, rotating
B3		

5.17.8 Setting Up the Counter

To start a counting process at least the signal mode needs to be parameterized and a rising edge at the bit QX8.2 or QX10.2 respectively (Set SW gate) of the control word is required.

You can define the counter functions by parameterizing: the counting mode, a primary direction (counting up/down), and the counting behavior. In addition, you can parameterize options for setting a comparison bit (conditions, hysteresis) as well as producing a process alarm (refer to Section, Additional Counter Features).

Counting Range, Count Limits

The maximum count limits are predetermined by the register size and cannot be changed.

Counting Range

Limits	Valid range of values
Lower count limit	–2 147 483 648 (–231)
Upper count limit	+2 147 483 647 (231 –1)

5.17.9 Counter Functions

Counting Mode

Depending on the application you can chose the counting mode:

- Endless counting, e.g. for detecting the position with a rotary encoder
- 1-time counting with or without primary direction, e.g. for counting products up to a maximum limit
- Periodic counting with or without primary direction, e.g. repeated identical pick-and-place operations

For both counting modes 1-time counting and periodic counting you can parameterize the counting range with load value and end value.

Via bit QX8.5 or QX10.5 respectively of the control word you can load a set value into the counting value. You can define the set value in the module parameters.

Counting Direction

No Primary Direction

The entire counting range is available when using a counting mode without primary direction.

Primary Direction Up

The counting range is limited at the top by a parameterized end value. Starting from 0, a set value or a parameterized load value, the counter counts until the end value -1 and is reset to the load value with the next encoder pulse.

Primary Direction Down

The counting range is limited at the bottom by a parameterized end value. Starting from 0, a set value or a parameterized load value, the counter counts until the end value +1 and is reset to the load value with the next encoder pulse.

Gate Function Activate / Deactivate Counter

The counter is activated and deactivated using an internal gate. The internal gate is identical to the software gate (SW gate), it is activated using a 0-1 edge at the bit Set SW gate in the control word and deactivated with a 0-1 edge at the bit Reset SW gate in the control word (see table Process data outputs).

Counting Behavior: Interrupt/ Cancel Counting

You can parameterize the counting behavior after a new gate start: Using “Interrupt counting”, the counter continues from the last counting value. Using “Cancel counting”, counting starts again from the load value.

Endless Counting

Figure 126: Continuous Counting

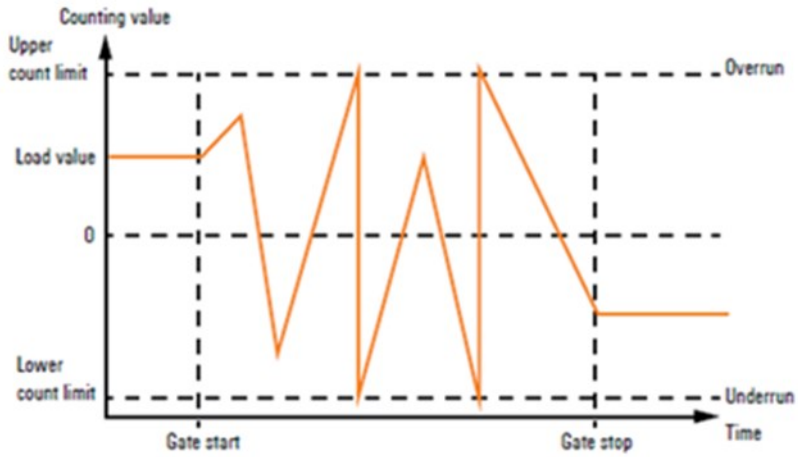

- Counting starts at the load value, the entire counting range is used.
- If the upper count limit is reached during up-counting, an additional counting pulse in the positive direction leads to a jump to the lower count limit. Counting continues from there.
- If the lower count limit is reached during down-counting, an additional counting pulse in the negative direction leads to a jump to the upper count limit. Counting continues from there.
- Upon exceeding the upper or lower counting limit, the status bit Overflow performed, or Underflow performed is set and a process alarm is triggered if it is parameterized. The status bits remain set until they are reset with the bit Reset status bits in the control word.

One-time Counting/ No Primary Direction

Figure 127: 1-time Counting, Interrupted Counting

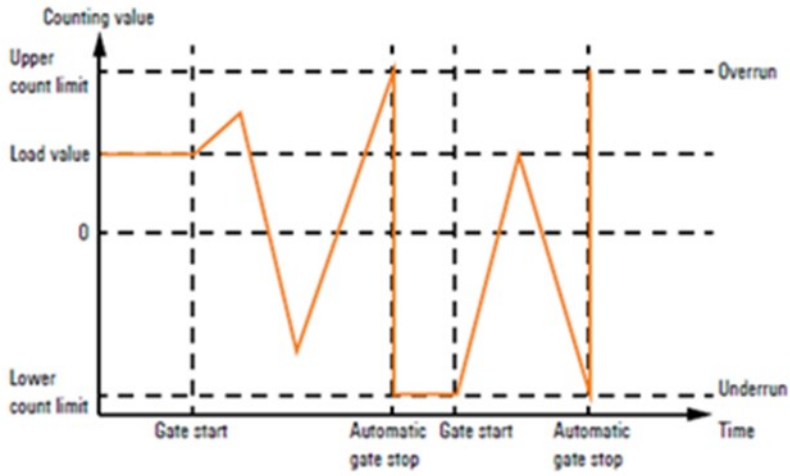

Figure 128: 1-time Counting, Cancelled Counting

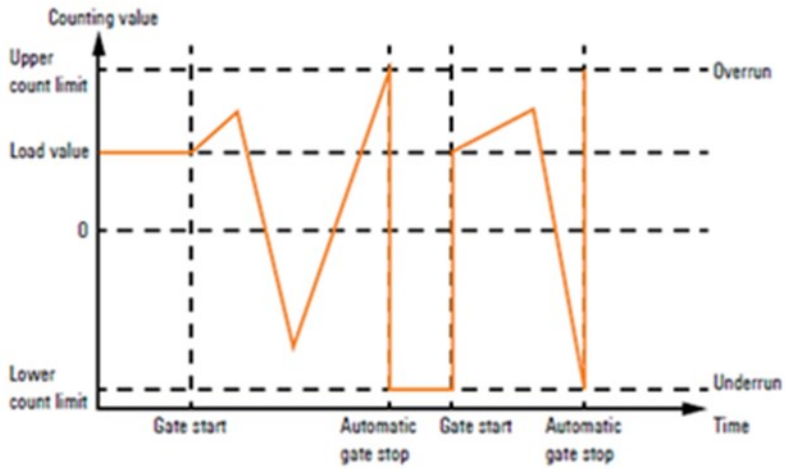

- Counting (up and down) starts at the load value, the entire counting range is used.
- Upon exceeding the upper or lower count limit, the counter jumps to the other count limit respectively. The internal gate is automatically closed, the status bit Overflow performed, or Underflow performed is set and a process alarm will be triggered if it is parameterized.

To restart counting, the internal gate must be reopened. Depending on the parameters set, counting continues from the current counting value (Interrupt counting) or it starts again from the load value (Cancel counting).

One-time Counting/ Primary Direction Up

Figure 129: 1-time Counting, Primary Direction Up

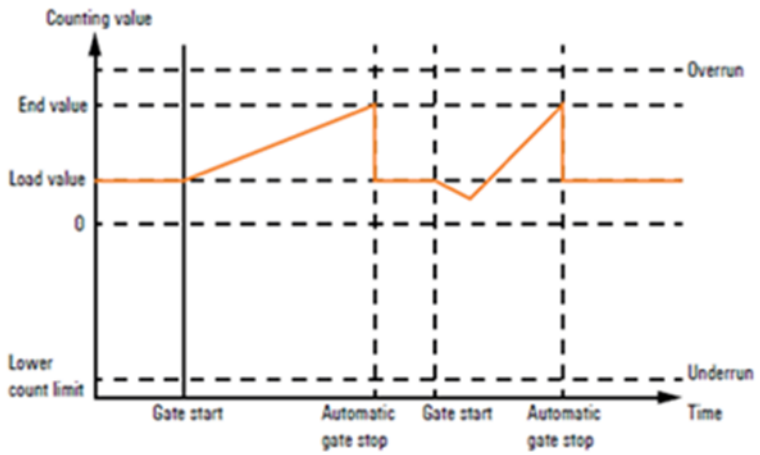

- Up-counting starts at the load value.
- If the parameterized end value -1 is reached during counting in the positive direction, the counter jumps back to the load value at the next positive count pulse. The internal gate is automatically closed, the status bit End value reached is set and a process alarm will be triggered if it is parameterized.
- To restart counting, the internal gate must be reopened. Counting starts again at the load value.
- Upon reaching the lower count limit the counter jumps to the upper count limit to continue counting from there. The status bit Underflow performed is set and a process alarm will be triggered if it is parameterized. All status bits remain set until they are reset with the bit Reset status bits in the control word. After a cancelled gate control, the counting process starts with the load value

Counting Range

Limits	Valid range of values
End value	–2 147 483 647 ($-2^{31}+1$) to +2 147 483 647 ($2^{31}-1$)
Lower count limit	+2 147 483 648 (2^{31})

One-time Counting/ Primary Direction Down

Figure 130: 1-time Counting, Primary Count Down

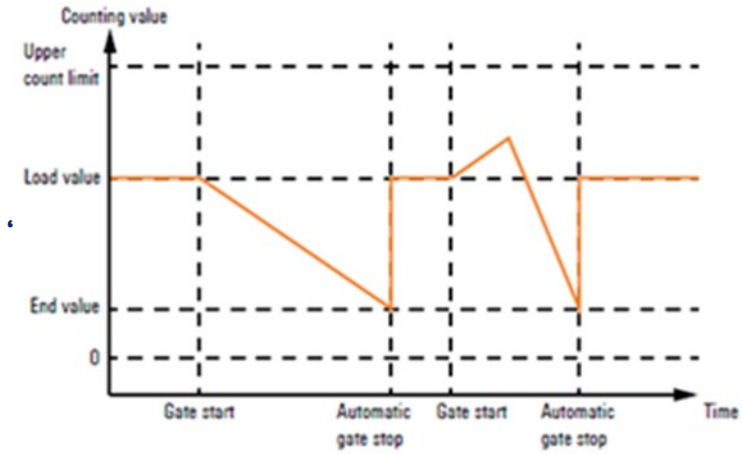

- If the parameterized end value +1 is reached during counting in the negative direction, the counter jumps back to the load value at the next count pulse. The internal gate is automatically closed, the status bit End value reached is set and a process alarm will be triggered if it is parameterized.
- To restart counting, the internal gate must be reopened. Counting starts again at the load value.
- Upon reaching the upper count limit the counter jumps to the lower count limit to continue counting from there. The status bit Overflow performed is set and a process alarm will be triggered if it is parameterized. All status bits remain set until they are reset with the bit Reset status bits in the control word.

Counting Range

Limits	Valid range of values
End value	–2 147 483 648 (-2^{31}) to +2 147 483 647 ($2^{31}-2$)
Upper count limit	+2 147 483 647 ($2^{31}-1$)

Periodic Counting/ No Primary Direction

Figure 131: Periodic Counting, No Primary Direction

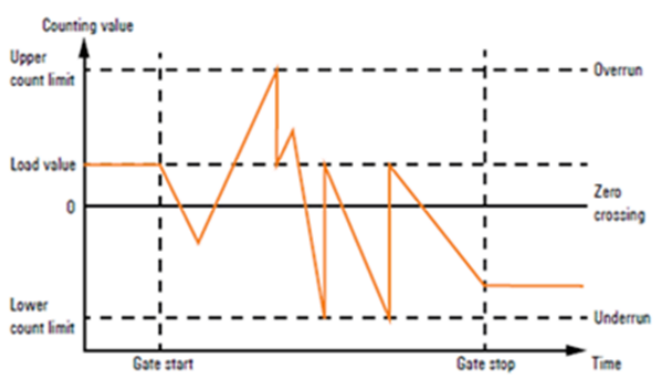

- Counting (up or down) starts at the load value, the entire counting range is used.

- Upon reaching a count limit, the counter jumps back to the load value and starts counting again from there. The status bit Overflow performed, or Underflow performed is set and a process alarm will be triggered if it is parameterized. All status bits remain set until they are reset with the bit Reset status bits in the control word.

Periodic Counting/ Primary Direction Up

Figure 132: Periodic Counting, Primary Direction Up

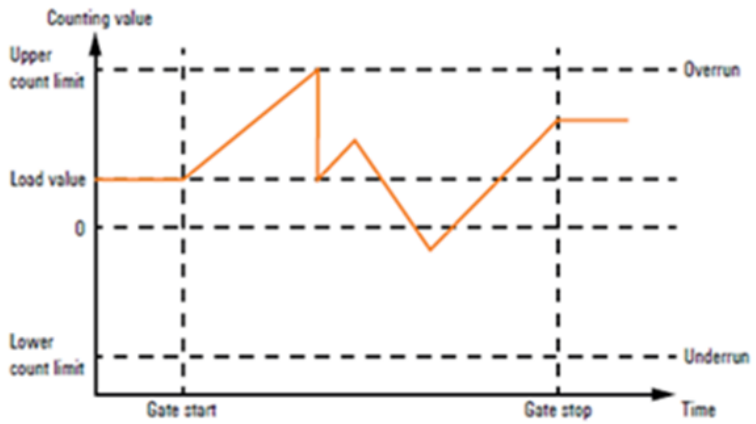

- Up-counting starts at the load value.
- If the parameterized end value -1 is reached during counting in the positive direction, the counter jumps back to the load value at the next positive count pulse and continues counting from there. The status bit "End value reached" is set and a process alarm will be triggered if it is parameterized.
- Upon reaching the lower count limit the counter jumps to the upper count limit to continue counting from there. The status bit "Underflow performed" is set and a process alarm will be triggered if it is parameterized. All status bits remain set until they are reset with the bit "Reset status bits" in the control word.

Counting Range

Limits	Valid range of values
End value	–2 147 483 647 ($-2^{31}+1$) to +2 147 483 647 ($2^{31}-1$)
Lower count limit	+2 147 483 648 (-2^{31})

Periodic Counting/ Primary Direction Down

Figure 133: Periodic Counting, Primary Direction Down

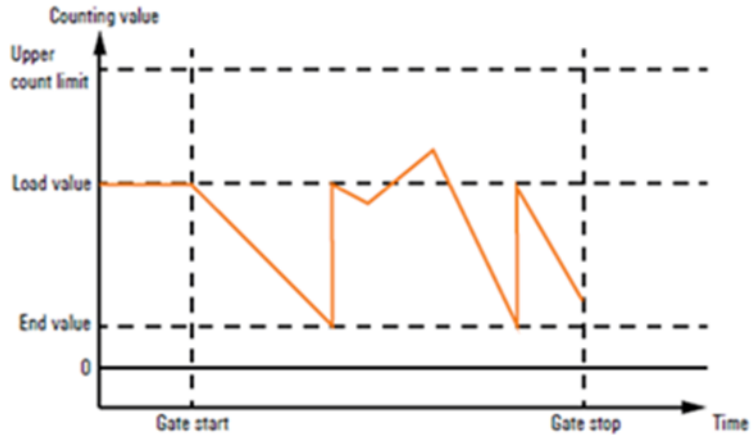

- Down-counting starts at the load value.
- If the parameterized end value +1 is reached during counting in the negative direction, the counter jumps back to the load value at the next count pulse and continues counting from there. The status bit End value reached is set and a process alarm will be triggered if it is parameterized.
- Upon reaching the upper count limit the counter jumps to the lower count limit to continue counting from there. The status bit Overflow performed is set and a process alarm will be triggered if it is parameterized. All status bits remain set until they are reset with the bit Reset status bits in the control word.

Counting Range

Limits	Valid range of values
End value	$-2\ 147\ 483\ 647\ (-2^{31})$ to $+2\ 147\ 483\ 647\ (2^{31}-1)$
Upper count limit	$+2\ 147\ 483\ 647\ (-2^{31}-1)$

5.17.10 Additional Counter Features

You can define the additional features for the counter listed below by parametrizing or via the process data outputs:

- Reset: resets the counting value to the load value during counting.
- Comparator: Upon meeting the comparison condition, the comparison bit is activated, or a process alarm is triggered.
- Hysteresis: reduces frequent toggling of the comparison bit and/or excessive triggering of a process alarm, e.g. when the value of a sensor signal fluctuates around the comparison value. It is possible to count beyond the lower count limit.

Figure 134: Additional Counter Functions

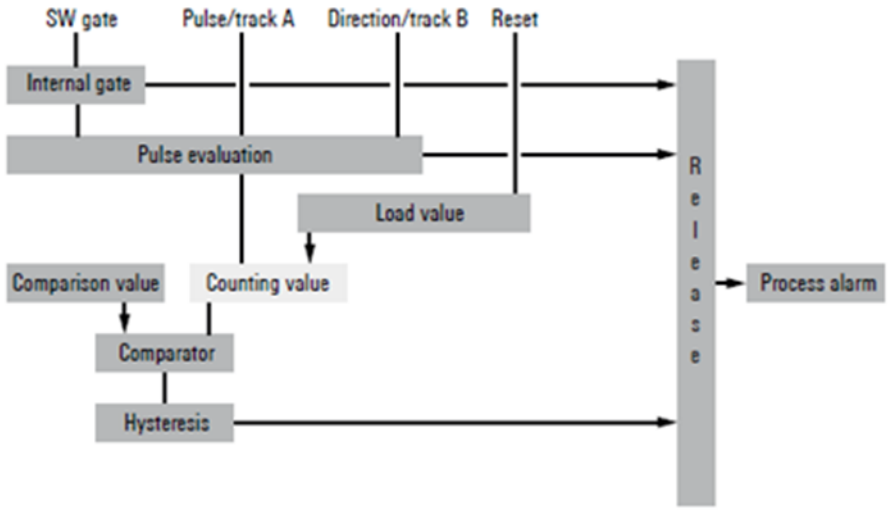

Comparison Function

Via the parameter Comparison function, you can deactivate the comparison function or define a comparison condition:

- Counter value higher or equal comparison value
- Counter value lower or equal comparison value
- Counter value equal comparison value

To use the comparison function, you must preset the comparison values for both counting channels in the respective first double word of the process data outputs and to set the bit QX8.1 and QX10.1 respectively (Comparison bit released) in each control word.

As soon as the counting value meets the corresponding comparison condition, the bits Comparison bit active and Comparison condition met are activated. The bit Comparison bit active remains set as long as the comparison condition is being met (respectively the parameterized hysteresis). The bit Comparison condition met remains active until it will be reset with the bit Reset of the status bits in the control word.

When using a counting mode with primary direction, the comparison bit will be set only upon reaching the comparison value from the primary direction.

Hysteresis

It is possible to reduce frequent triggering of a process alarm and toggling of the comparison bit (e.g. if the value of a sensor signal fluctuates around the comparison value), by setting the hysteresis. You thereby define a range above and below a reference value (zero crossing, overflow/underflow and comparison value), within which the status bit will not be reset.

A limit value between 0 and 255 can be parameterized for the hysteresis. With hysteresis = 3 for example, all values differing less than 3 from the reference value are smoothed. Hysteresis is deactivated with the values 0 and 1. The hysteresis is activated upon reaching the comparison condition. The comparison result remains unchanged during active

hysteresis until the counting value reaches the predetermined hysteresis limit. After leaving the hysteresis range, hysteresis is reactivated only upon reaching the comparison condition again.

After changing the hysteresis value, an active hysteresis remains active. The new hysteresis value is active during the next hysteresis event.

The behavior of the status bit for hysteresis = 0 (hysteresis deactivated) and hysteresis = 3 is shown in the following diagrams (legends describe the behavior for hysteresis = 3):

Figure 135: Operating principle of the Hysteresis with Counter Value ≥ Comparison Value

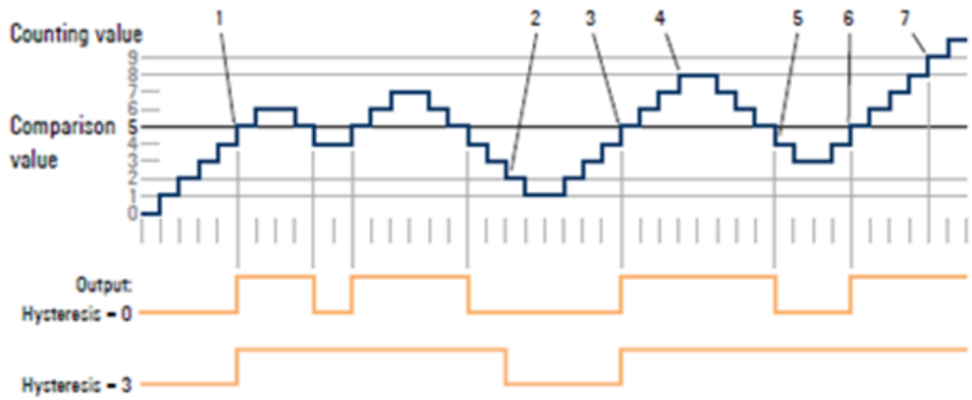

1. Comparison condition met → status bit is set and hysteresis activated
2. Comparison condition not met, leaving the hysteresis range → status bit is reset
3. Comparison condition met → status bit is set and hysteresis activated
4. Leaving the hysteresis range, the status bit remains set because the comparison condition is still met
5. Comparison condition no longer met but hysteresis still active → status bit remains set
6. Comparison condition met, hysteresis still active → status bit remains set
7. Leaving the hysteresis range and comparison condition met → status bit remains set

Figure 136: Operating Principle of the Hysteresis with Counter Value = Comparison Value

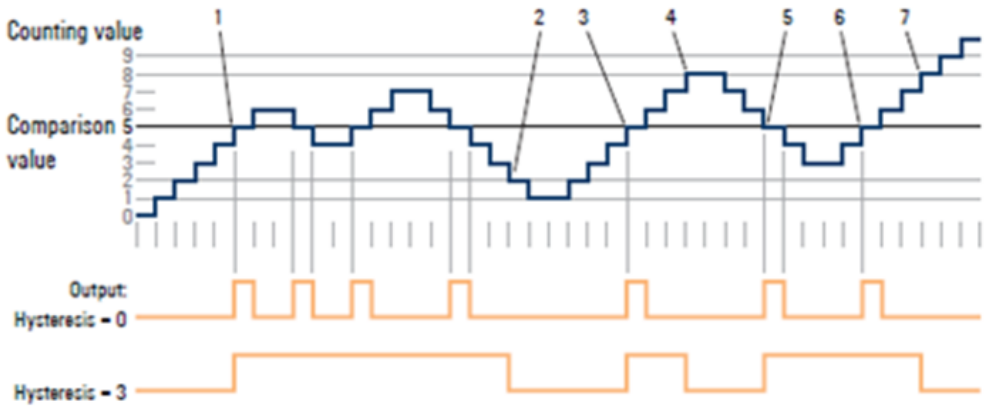

1. Comparison condition met → status bit is set and hysteresis activated
2. Comparison condition not met, leaving the hysteresis range → status bit is reset
3. Comparison condition met → status bit is set and hysteresis activated
4. Leaving the hysteresis range and comparison condition not met → status bit is reset
5. Comparison condition met → status bit is set and hysteresis activated
6. Comparison condition met and hysteresis active → status bit remains set
7. Leaving the hysteresis range and comparison condition no longer met → status bit is reset

Figure 137: EP-5112 Counter Operation Using Rotary Transducer

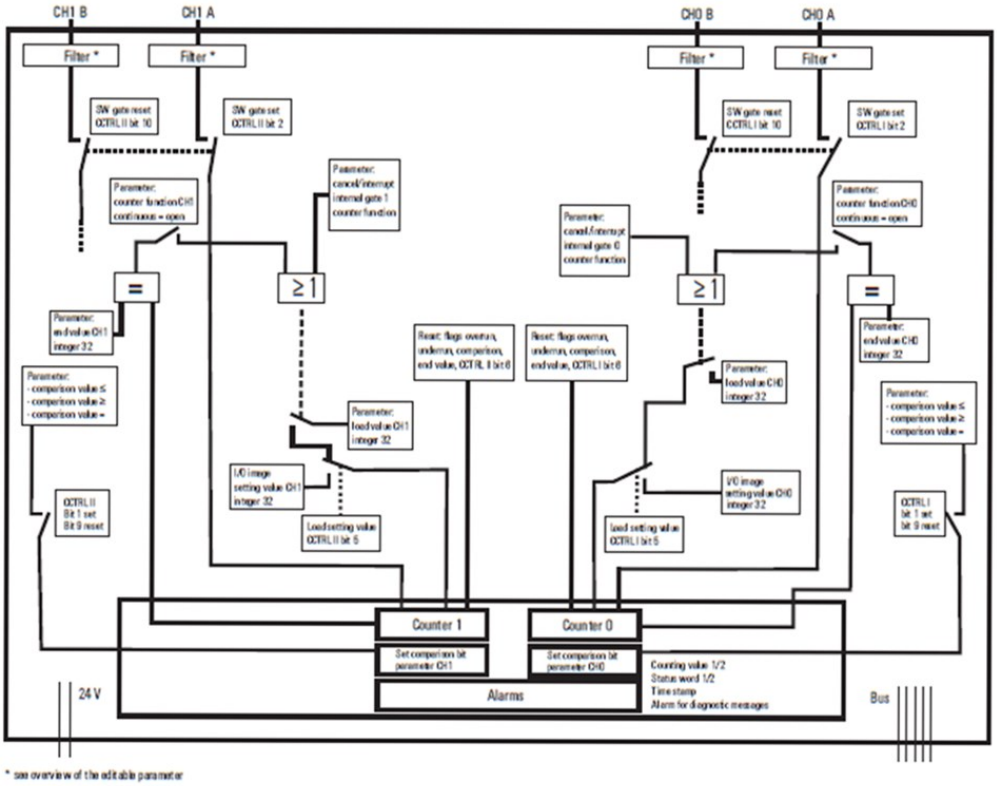

Figure 138: EP-5112 Counter Operation using Pulse/Direction (A/B)

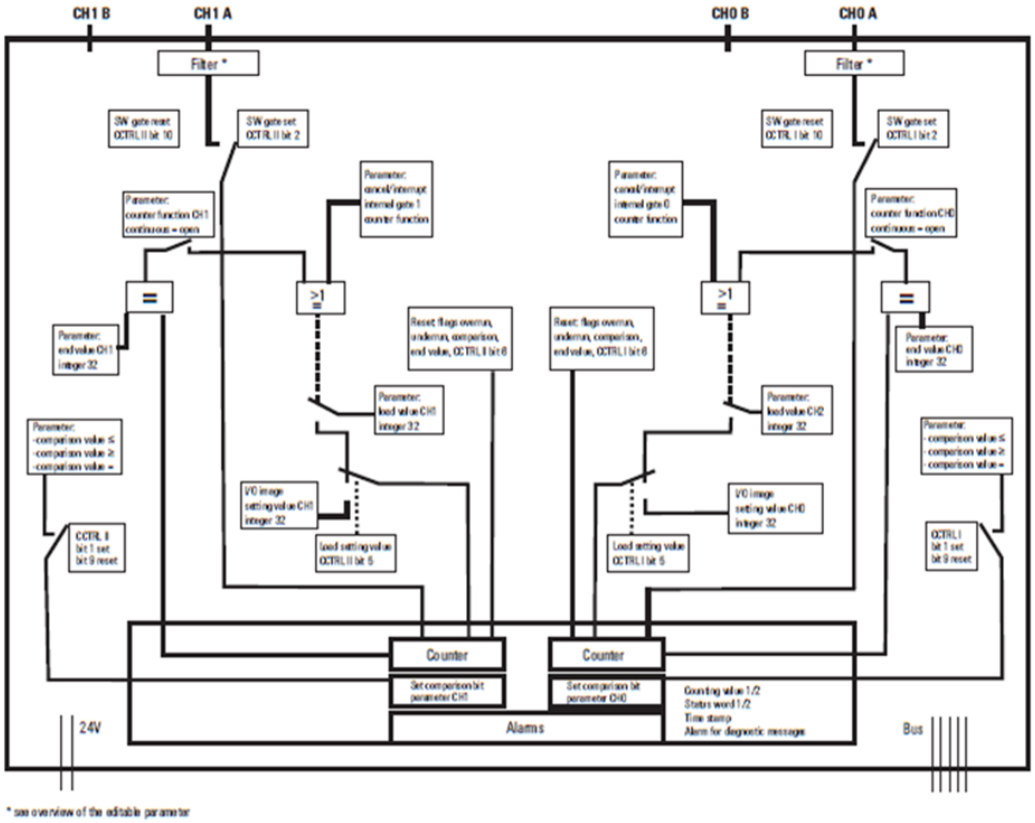

5.18 Digital Frequency Counter Module EP-5212

Figure 139: Digital Counter Module EP-5212

Figure 140: Connection Diagram EP-5212

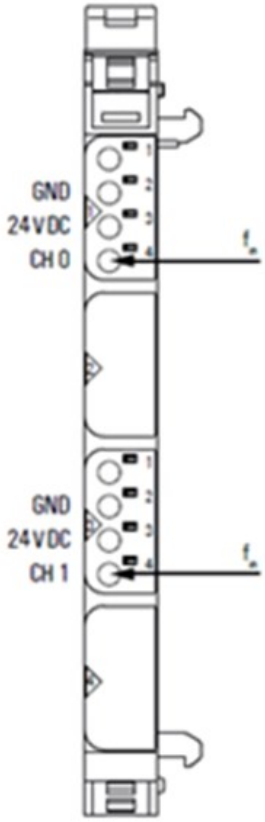

The digital counter module EP-5212 can read frequency of one square-wave signal (1 channel) from one or two external sensors with a maximum input frequency of 100 kHz. Frequencies to be counted are applied to channel CH0 and/or channel CH1, the measurement will be started via control word 1 and 2 respectively. Measuring cycles can be defined in µs. The longer the measuring cycle the more exactly the measurement.

A status LED is assigned to each channel. The module electronics supply the connected sensors with power from the input voltage path (IIN).

The EP-5212 has:

- Two counter inputs 24Vdc
- Counting frequency 100 kHz max
- Digitally adjustable input filter to suppress interferences (17 filter frequencies gradually adjustable between 3 Hz and 187 kHz)

5.18.1 LED Indicators EP-5212

	Module Status	**Green**: Communication over the system bus **Red**: Module System Fault or Diagnostic Fault
	1.1	--
	1.2	--
	1.3	--
	1.4	**Yellow**: CH0 active (1-level)
	2.1	
	2.2	
	2.3	
	2.4	
	3.1	--
	3.2	--
	3.3	--
	3.4	**Yellow**: CH1 active (1-level)
	4.1	
	4.2	
	4.3	
	4.4	

For error messages refer to Section 12: *LED Indicators and Troubleshooting*.

Figure 141: Block Diagram EP-5212

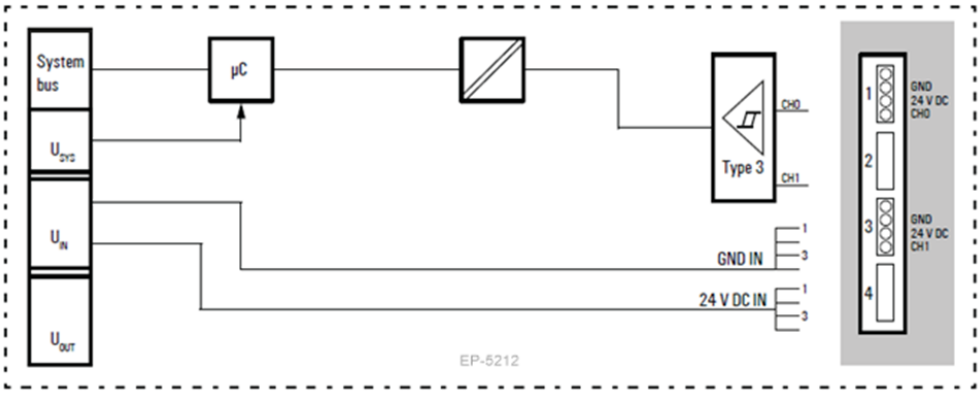

5.18.2 Specifications EP-5212

Specifications	Description
System data	
Data	Process, parameter and diagnostic data depend on the network Adapter used (refer to Section, Order and Arrangement of Modules).
Interface	RSTi-EP I/O communication bus
System bus transfer rate	48 Mbps
Galvanic isolation	500Vdc between the current paths
Inputs	
Number of counter inputs	2
Input filter	adjustable between 3 Hz and 187 kHz (333ms and 5µs)
Low input voltage	< 5 V
High input voltage	> 11 V
Max. input current per channel	3.5 mA
Sensor supply	Yes
Sensor connection	2- and 3-wire
Reverse polarity protection	Yes
Module diagnosis	Yes
Individual channel diagnosis	No
Counter width	32 bits
Maximum input frequency	100 kHz
Mode of operation	Pulse and direction / AB mode with 1-, 2-, 4-times sampling
Supply	
Supply voltage	20.4V – 28.8V
Current consumption from system current path ISYS, typ.	8 mA
Current consumption from input current path IIN	35 mA + sensor supply current
General data	
Weight	87 g (3.07 oz)
For additional general data, refer to Section, General Technical Data for I/O Modules.	

5.18.3 Modifiable Parameters for EP-5212

Channel	Description	Options (Value)	Default
0 - 1	Input filter	5µs [187 kHz] (0) / 11µs [94 kHz] (1) / 21µs [47 kHz] (2) / 43µs [23 kHz] (3) / 83µs [12 kHz] (4) / 167µs [6 kHz] (5) / 333µs [3 kHz] (6) / 667µs [1.5 kHz] (7) / 1ms [732 Hz] (8) / 3ms [366 Hz] (9) / 5ms [183 Hz] (10) / 11ms [92 Hz] (11) / 22ms [46 Hz] (12) / 43ms [23 Hz] (13) / 91ms [11 Hz] (14) / 167ms [6 Hz] (15) / 333ms [3 Hz] (16)	5µs [187 kHz]

Input Filter EP-5212

Limiting frequency	Filter time, real value	Filter time
187 kHz	5.35µs	5µs
94 kHz	10.64µs	11µs
47 kHz	21.28µs	21µs
23 kHz	43.47µs	43µs
12 kHz	83.33µs	83µs
6 kHz	166.67µs	167µs
3 kHz	333.33µs	333µs
1.5 kHz	666.67µs	667µs
732 Hz	1.36ms	1ms
366 Hz	2.73ms	3ms
183 Hz	5.46ms	5ms
92 Hz	10.87ms	11ms
46 Hz	21.74ms	22ms
23 Hz	43.47ms	43ms
11 Hz	90.90ms	91ms
6 Hz	166.67ms	167ms
3 Hz	333.33ms	333ms

5.18.4 Diagnostic Data EP-5212

Name	Bytes	Bit	Description	Default
Error indicator	0	0	Module error	
		1	Internal error	
		2	External error	
		3	Channel error	0
		4	Error	
		5	Reserved	0
		6	Reserved	0
		7	Parameter error	
Module type	1	0	Module Type	0x08
		1		
		2		
		3		
		4	Reserved	1
		5	Reserved	0
		6	Reserved	0
		7	Reserved	0
Error byte 2	2	2-7	Reserved	0
Error byte 3	3	0-2	Reserved	0
		3	Internal diagnostic FIFO full	0
		4-7	Reserved	0
Channel type	4	0-6	Channel type	0x76
		7	Reserved	0
Diagnostic bits per channel	5		Number of diagnostic bit per channel	0
Number of channels	6		Number of similar channels per module	2
Channel error	7-10	0-31	Reserved	0
Channel 0 error to Channel 31 error	11 to 42	0-7	Reserved	0
Time stamp	43-46		Time stamp [µs] (32-bit)	

5.18.5 Process Data† Inputs EP-5212

Byte	Format	Name	Bit	Function when active	Remark
IB0 ... IB3	Double word	Channel 0: Counter value			Channel 0: Currently measured value of period duration multiplied by 125ns results in the current period duration in µs
IB4 ... IB7	Double word				Channel 0: Number of rising edges within the current measurement cycle
IB8 ... IB11	Double word	Channel 1: Counter value			Channel 1: Currently measured value of period duration multiplied by 125ns results in the current period duration in µs
IB12 ... IB15	Double word				Channel 1: Number of rising edges within the current measurement cycle
IB16	Word	Channel0: Counter Status	IX16.0 ... 16.7	reserved	
IB17			IX17.0	Measurement active	
			IX17.1 ... 17.7	reserved	
IB18	Word	Channel 1: Counter Status	IX18.0 ... 18.7	reserved	
IB19			IX19.0	Measurement active	
			IX19.1 ... 19.7	reserved	
†Internal process data mapping with data format Standard. Depending on the fieldbus specification and the data format of the communicating fieldbus components the bytes and/or words can be reversed during data transfer.					

5.18.6 Process Data† Outputs EP-5212

Byte	Format	Name	Bit	Function when edge 0-1	Remark
QB0 ... QB3	Double word	Channel 0: Measurement cycle period			Channel 0: Preset value of the measurement cycle period (23 Bit)
QB4 ... QB7	Double word	Channel 1: Measurement cycle period			Channel 1: Preset value of the measurement cycle period (23 Bit)
QB8	Word	Channel 0: Control word	QX8.0 - QX8.7	reserved	
QB9			QX9.0	Measurement start	
			QX9.1	Measurement stop	
			QX9.2 - 9.7	reserved	
QB10	Word	Channel 1: Control word	QX10.0 - X10.7	reserved	
QB11			QX11.0	Measurement start	
			QX11.1	Measurement stop	
			QX11.2 - 11.7	reserved	
†Internal process data mapping with data format Standard. Depending on the fieldbus specification and the data format of the communicating fieldbus components the bytes and/or words can be reversed during data transfer.					

5.18.7 Function Frequency Counting

Defining the Measurement Cycle Period

The length of measurement cycle period has to be defined for each channel within the output process data. As the 23-bit value has a resolution of 1µs, values between 1µs and 8,388,607µs can be defined. The measurement cycle period must be long enough to detect at least one rising edge.

Setting of Input Filter

In order to suppress any disturbances a digital input filter can be set for each channel via the Parameter Input filter (refer to Section, Modifiable Parameters for EP-5212).

Start Measurement

Setting of Bit 8 in the control word of each channel starts the cyclic measurement.

Figure 142: Principal: Function Frequency Counting

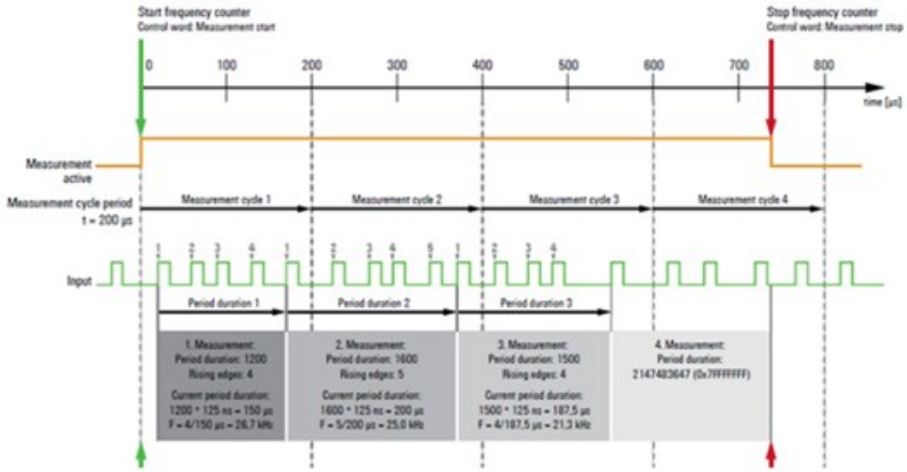

Calculation of Results

The input process data Rising edges register the amount of rising edges for each channel within the referring measurement cycle period. Counting starts with the last rising edge of the previous measurement cycle and ends with the last but one edge of the current measurement cycle. The time between first and last counted edge is defined as measured period. This is a 27-bit value with a resolution of 125 ns and a precision of 1µs (valid value range between 0x00000008 and 0x7FFFFFF8).

Due to its resolution, the value must be divided by 8 within the control program in order to get the current period duration in microseconds. This value can be between 1µs and 16,777,215µs.

The frequency is being calculated program-wise as follows:

$$\text{Frequency F} = \frac{\text{Rising edges in current period}}{\text{Current measured period}}$$

In case there is no rising edge registered within a measurement cycle the current period duration will be set to the maximum value of 16,777,215.875µs.

If the current period duration as well as the rising edges are registered as zero, the current measured period was too short to register a rising edge.

Modifying the Measurement Cycle Period

The measurement cycle period can be modified during a running measurement. In this case the new value is not valid until the following measurement cycle, during the current measurement cycle the old value will be kept.

Stop Measurement

Setting of Bit 9 in the control word of each channel stops the cyclic measurement. If the last measurement cycle has not been run through completely, the current measured period will be set to the maximum value of 0x7FFFFFFF, the rising edges will be set to zero.

Figure 143: Block Diagram: Frequency Counter EP-5212

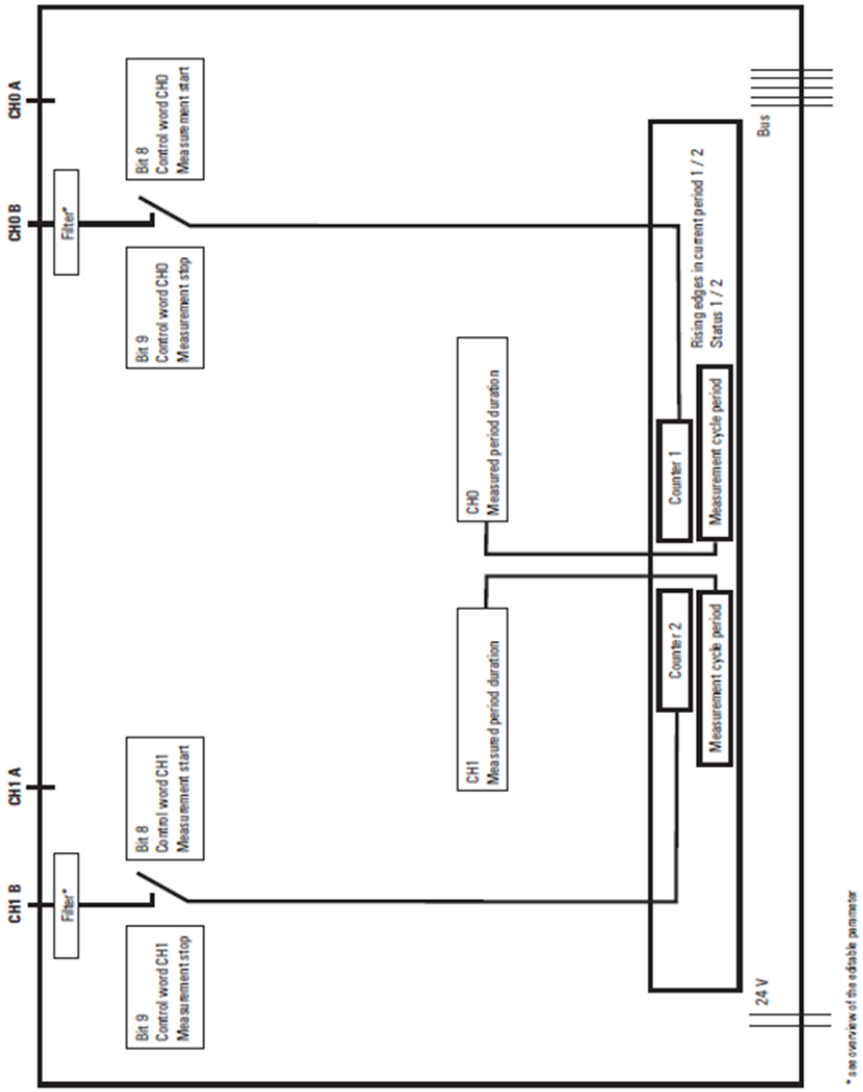

5.19 Serial Communication Module EP-5261

Figure 144: Digital Interface Module EP-5261

Figure 145: Connection Diagram EP-5261

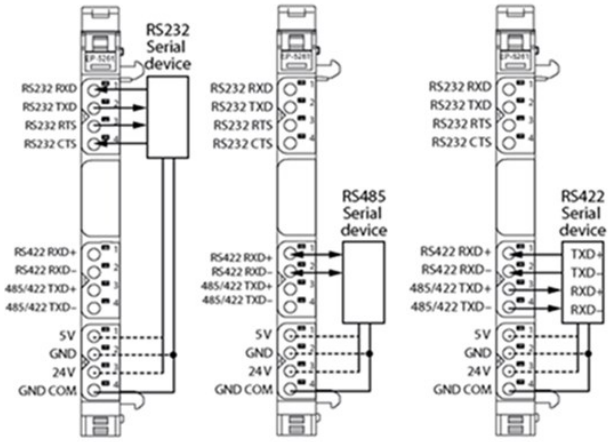

Serial data can be exchanged between the PLC and a data terminal device using the EP-5261 communication module. The device (such as a barcode scanner, printer) can be connected through an interface type RS232, RS485 or RS422.

The data transfer rate can be parameterized between 300 and 115200 bps. The process data length can be parameterized to be 8-byte or 16-byte. A terminating resistor can be parameterized for the RS485 and RS422 interface respectively.

The communication status is indicated by two LEDs on the respective plug.

The module electronics supply the connected data terminal device with power from the input current path (IIN) either with 5Vdc or 24Vdc (parameterizable). Both supply voltage outputs are protected against overcurrent.

Figure 146: Connection Variants for the Voltage Supply

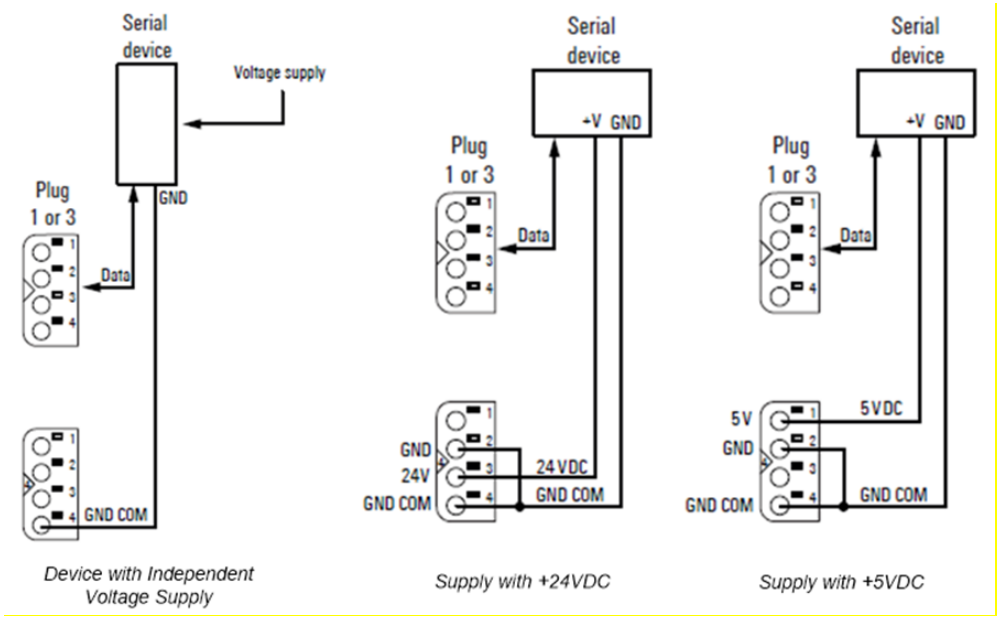

Pin Assignment of the Sub-D Plug (RS232 only)

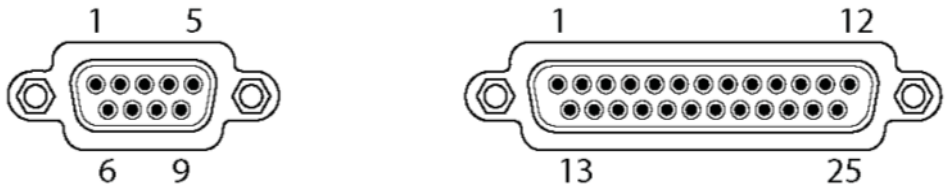

	Name	Signal	Direction	Cable Color	RS232 Pin
Assignment of the 9-pole plug (male)					
1.1	RXD	Receive data	In	Brown	2
1.2	TXD	Transmit data	Out	Green	3
1.3	RTS	Request to send	Out	Blue	7
1.4	CTS	Clear to send	In	Red	8
4.2	GND	Signal ground		Grey	5
Assignment of the 25-pole plug (male)					
1.1	RXD	Receive data	In	Green	3
1.2	TXD	Transmit data	Out	Brown	2
1.3	RTS	Request to send	Out	Yellow	4
1.4	CTS	Clear to send	In	Grey	5
4.2	GND	Signal ground		Blue	7

Connection Cables for the Serial Device

Use shielded cables, because electromagnetic interferences from the surroundings have to be assumed. The maximum permissible cable length depends on the cable capacitance and the baud rate.

Connecting a RS232 Device

Maximum Cable Length RS232

Cable Capacitance	Maximum Cable Length
≤ 2500 pF	15 m (49 ft), shielded
55 pF/m	45 m (147 ft)

Connecting a RS485 or RS 422 Device

The serial device must be connected using a twisted pair cable (U/UTP, Type Cat- 3 or J-2YY-2x2x0,6).

Maximum Cable Length RS422/485

Baud Rate in kbps	Maximum Cable Length
≤ 19200	1,200 m (3,937 ft), shielded
38400	500 m (1,640 ft)
57600	250 m (820 ft)
115200	200 m (656 ft)

- RS485: Use one core pair for Data+/Data–. You can use any wire for the ground signal GND COM. The remaining free wires should be connected to ground.
- RS422: Connect the wires for transmitting signals TXD+/TXD– and those for receiving signals RXD+/RXD– in pairs respectively. You can use any wire for the ground signal GND COM. The remaining free wires should be connected to ground.

5.19.1 LED Indicators EP-5261

Module Status	**Green**: Communication over the system bus **Red**: Module System Fault or Diagnostic Fault
1.1	**Yellow**: RS232 parameterized **Yellow flashing**: Data are being received
1.2	**Yellow**: RS232 parameterized **Yellow flashing**: Data are being transmitted
1.3	--
1.4	--
3.1	3.1 ... 3.4 **Yellow**: RS422 parameterized 3.1 + 3.2 **Off**, 3.3 + 3.4 **Yellow**: RS485 parameterized 3.3 **Yellow flashing**: Data are being received 3.4 **Yellow flashing**: Data are being transmitted
3.2	
3.3	
3.4	
4.1	**Green**: Supply voltage +5Vdc
4.2	--
4.3	**Green**: Supply voltage +24Vdc
4.4	--

For error messages refer to Section 12, LED Indicators and Troubleshooting.

Figure 147: Block Diagram EP-5261

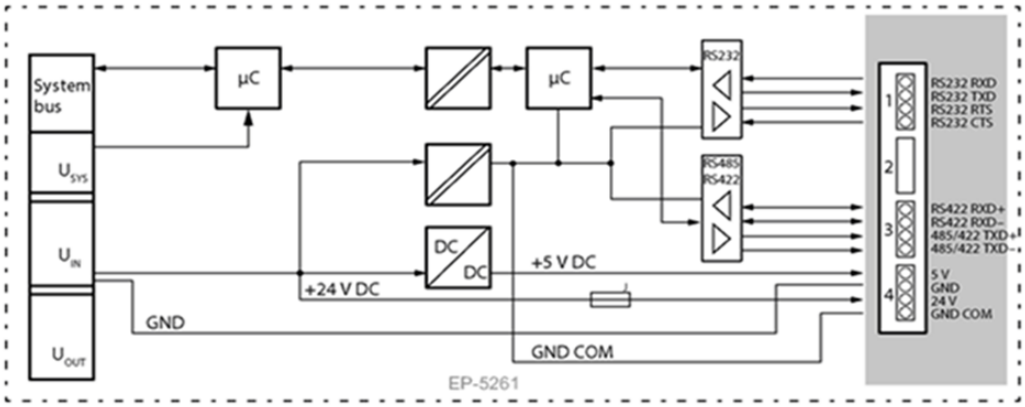

5.19.2 Specifications EP-5261

Specifications	Description
System data	
Data	Process, parameter and diagnostic data depend on the network Adapter used (refer to Section, Order and Arrangement of Modules).
Interface	RSTi-EP I/O communication bus
System bus transfer rate	48 Mbps
Serial Interface	
Number	1
Type	RS232, RS485, RS422, parameterizable
Transfer rate	300 ... 115200 Bps, parameterizable
Supply voltage	5Vdc or 24Vdc
Current of power supply output	max. 500 mA
Standards RS232	DIN 66020, DIN 66259, EIA-RS232C, CCITT V.24/V.28
Standards RS485/RS422	120 Ω, parameterizable
Short-circuit proof	Yes
Module diagnosis	Yes
Individual channel diagnosis	Yes
Supply	
Supply voltage	20.4V – 28.8V
Current consumption from system current path ISYS,	8 mA
Current consumption from input current path IIN	16 mA + load
General data	
Weight	92 g (3.25 oz)
For additional general data, refer to Section, General Technical Data for I/O Modules	

5.19.3 Modifiable Parameters for EP-5261

Description	Options[5]	Default
Operating mode	Disabled (0) / RS232 (1) / RS485 (2) / RS422 (3)	Disabled
Data bits[6]	7 Bit (0) / 8 Bit (1)	8 Bit
Baud rate	300 (0) / 600 (1) / 1200 (2) / 2400 (3) / 4800 (4) / 9600 (5) / 14400 (6) / 19200 (7) / 28800 (8) / 38400 (9) / 57600 (10) / 115200 (11)	9600
Stop bit	1 Bit (0) / 2 Bit (1)	1 Bit
Parity	None (0) / Even (1) / Odd (2)	None
Flow control	None (0) / CTS/RTS (1) / XON/XOFF (2)	None
XON character	0 ... 255	17
XOFF character	0 ... 255	19
Terminating resistor RS485/422	Off (0) / On (1)	Off
Process data length	16 Byte (1)	16 Byte

5.19.4 Diagnostic Data EP-5261

Name	Bytes	Bit	Description	Default
Error indicator	0	0	Module error	
		1	Internal error	
		2	External error	
		3	Channel error	0
		4	Error	
		5	Reserved	0
		6	Reserved	0
		7	Parameter error	
Module type	1	0	Module Type 0x05	1
		1		0
		2		1

[5] Values in brackets for EtherCAT and Modbus-TCP.
[6] The option “7 Bit“ works only in combination with a parity ("even" or "odd").

Name	Bytes	Bit	Description	Default
		3		0
		4	Reserved	0
		5	Reserved	0
		6	Reserved	0
		7	Reserved	0
Error byte 2	2	0-7	Reserved	0
Error byte 3	3	0-2	Reserved	0
		3	Internal diagnostic FIFO full	0
		4-7	Reserved	0
Channel type	4	0	Channel type 0x79	1
		1		0
		2		0
		3		1
		4		1
		5		1
		6		1
		7		0
Diagnostic bits per channel	5		Number of diagnostic bit per channel	0
Number of channels	6		Number of similar channels per module	1
Channel error	7-10	0-31	Reserved	0
Time stamp	43-46		Time stamp [µs] (32-bit)	

5.19.5 Data Transfer

The process data length can be parameterized to be 8 or 16 Bytes. Byte 0 is used for status and diagnosis, Byte 1 for the data segment length, and the remaining 6 or 14 Bytes are user data.

Process input data: The data sent from the serial device are written into the receive memory of the RSTi-EP module. As soon as the SPS request results in that RX_CNT is not equal RX_CNT_ACK, the data will be sent in segments via the network adapter to the PLC. The successfully data transfer will be acknowledged to the module.

The receive memory can safe a maximum of 255 Bytes. A software handshake (XON/XOFF) or a hardware handshake (RTS/CTS) can be parameterized using the flow control, so that an alarm will warn against a buffer overflow.

Process output data: The data sent from the PLC via the network adapter are written into the transmission memory of the RSTi-EP module. The module is continuously checking whether data are ready to be sent or a data transfer to the device has been finished successfully. Not till then the next data will be transferred.

Process Input Data EP-5261

Byte	Format	Name	Bit	Description	Remarks
IB0	Word	Status and Diagnosis	IX0.0	Data in the receive memory	RX = 0: Receive memory is empty RX = 1: A telegram (or telegram segment) in the receive memory is ready for transmission.
			IX0.1	Receive memory nearly full	Only 10 characters are left in the receive memory. XOFF will be set if parameterized.
			IX0.2	Not used	
			IX0.3	RX_CNT	The RX_CNT value is assigned to each data segment of the process input data while transmission. The sequence or the RX_CNT values is: Binary: 00, 01, 10, 11, 00, ... Decimal: 0, 1, 2, 3, 0, ... A faulty data sequence indicates missing data segments.
			IX0.4	RX_CNT	
			IX0.5	TX_CNT_ACK	The TX_CNT_ACK value is a copy of the TX_CNT value, which has been transferred together with the last data segment of the process output data. TX_CNT_ACK acknowledges that the data has been taken over successfully.
			IX0.6	TX_CNT_ACK	
			IX0.7	STAT	STAT = 1: Communication with the device is without fault. STAT = 0: Faulty communication with the device.
IB1	Word	Length of the data segment / or of the subsequent diagnosis data		RX	Length of the data / diagnosis data in this frame
IB 2 ... IB 7 or IB 2 ... IB 15		Received data		User data of the transferred telegram segment	

Process Output Data EP-5261

Byte	Format	Name	Bit	Description	Remarks
QB0	Word	Status and Diagnosis	IX0.0	RXBUF FLUSH	Bit 0: RXBUF FLUSH The receive memory can be scrubbed using this bit. STATRES = 1: A requirement with RXBUF FLUSH = 1 will be ignored. STATRES = 0: The receive memory will be scrubbed with RXBUF FLUSH = 1.
			IX0.1	TXBUF FLUSH	Bit 1: TXBUF FLUSH The emission memory can be scrubbed using this bit. STATRES = 1: A requirement with TXBUF FLUSH = 1 will be ignored. STATRES = 0: The emission memory will be scrubbed with TXBUF FLUSH = 1.
			IX0.2	RX_HWBUFFER	Bit 2: DisableSend_TX_HWBUFFER This bit controls the hardware emission memory: DisableSend_TX_HWBUFFER = 0: The hardware emission memory is released. A character (Byte) will be sent as soon as it reaches the buffer. DisableSend_TX_HWBUFFER = 1: The hardware emission memory is locked. Characters (Bytes) will only be sent, when DisableSend_TX_HWBUFFER is set to 0 again.
			IX0.3	TX_CNT	The TX_CNT value is assigned to each data segment of the process output data. The sequence or the TX_CNT values is: Binary: 00–>01–>10–>11–>00... Decimal: 0–>1–>2–>3–>0... A faulty data sequence indicates missing data segments.
			IX0.4	TX_CNT	
			IX0.5	RX_CNT_ACK	RX_CNT_ACK must include a copy of the RX_CNT value. The RX_CNT value has been transferred together with the last data segment of the process input data. RX_CNT_ACK must be set in analogy with RX_CNT (in the status byte). It indicates that the data segment has been transferred successfully by using RX_CNT and enables to receive new data.
			IX0.6	RX_CNT_ACK	

Byte	Format	Name	Bit	Description	Remarks
			IX0.7	Communication Status	The input data status bit STAT will be reset using this bit. When changing from 1 to 0 (falling edge) STAT will be reset from 0 to 1. STAT = 0: All changes in the data fields TX_BYTE_CNT, TX_CNT and RX_CNT_ACK will be ignored. The receive or emission memory can be scrubbed using RXBUF FLUSH or TXBUF FLUSH respectively. STAT = 1 or changing from 0 to 1: The buffers cannot be scrubbed.
QB1	Word	Length of the data segment			
QB 2 ... QB 7 or QB 2 ... QB 15		Transmission data		User data of the transferred telegram segment	

Enabling the Data Transfer

There are different ways to announce the communication module to the control. Using the test mode copy the input data into the output data of the module so that the received data will be sent again. Or select one of the function blocks provided by the engineering tool.

For programming, regard the following schemes showing the sequences for receiving and transmission

Figure 148: Receiving Sequence

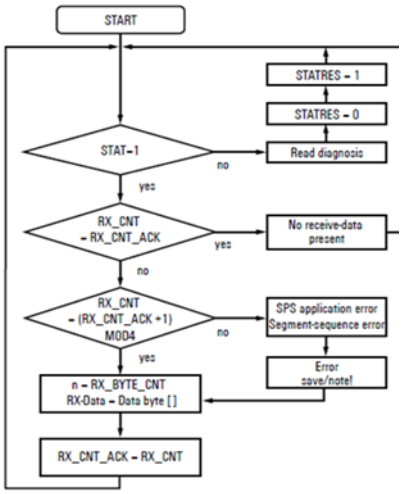

Figure 149: Transmission Sequence

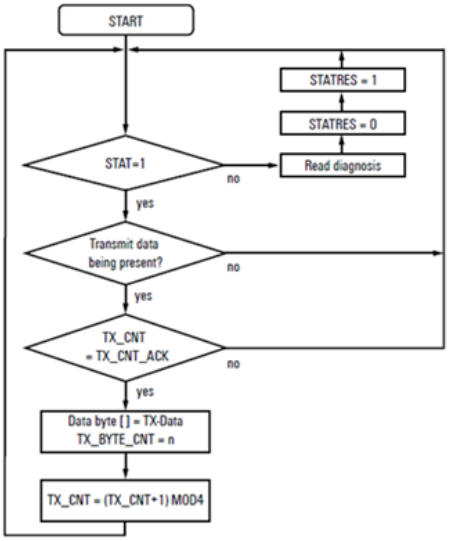

The status and control word values during various states of communication are provided in the following table.

Action	Input Byte 0 (Status) of Module								Input Byte1 (length of RX byte seg.)	Output byte 0 (control) off the module								Output byte 1 (length of TX byte seg.)	Notes
	7	6	5	4	3	2	1	0		7	6	5	4	3	2	1	0		
	Stat	TX_CNT_ACK		RX_CNT						STATRES	RX_CNT_ACK		TX_CNT						
Init/ Startup	1	0	0	0	0	0	0	0	0	0	0	0	0	0	0	0	0	0	After power-up, module is ready for communication
Activate communication	1	0	0	0	0	0	0	0	0	1	0	0	0	0	0	0	0	0	PLC is ready for communication (response)
Receive data	1	0	0	0	1	0	0	0	N (1 ..14)	1	0	0	0	0	0	0	0	0	Module has received bytes
	1	0	0	0	1	0	0	0	N	1	0	1	0	0	0	0	0	0	RX acknowledge after data taken over
Send data	1	0	0	0	1	0	0	0	X	1	0	1	0	1	0	0	0	N (1...14)	Before changing TX-CNT, set TX bytes
	1	0	1	0	1	0	0	0	X	1	0	1	0	1	0	0	0	N	TX acknowledge after module sent data

5.20 SSI Encoder Interface Module EP-5311

Figure 150: SSI Encoder Interface Module EP-5311

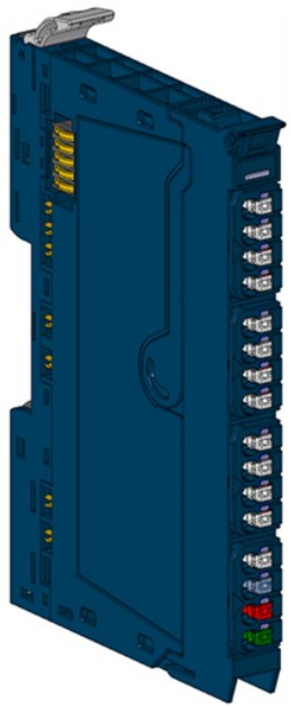

Figure 151: Connection Diagram EP-5311

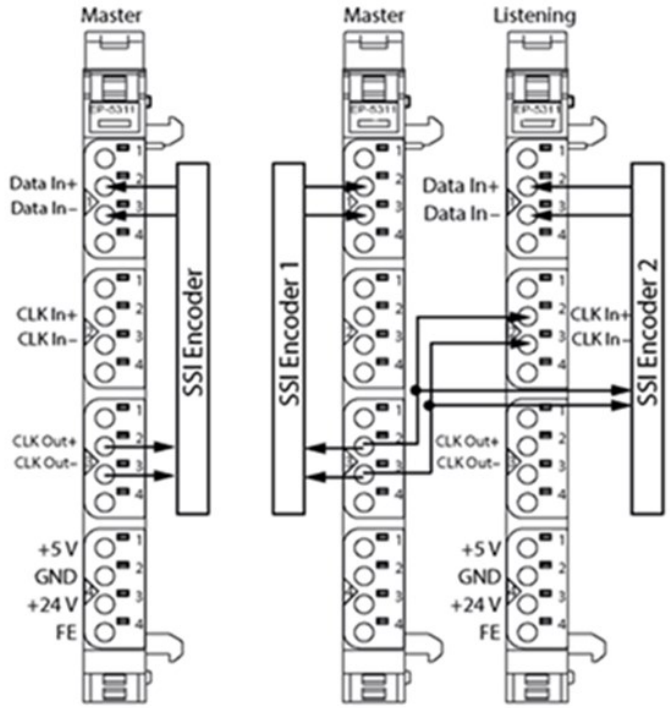

The EP-5311 SSI Encoder Interface module can read differential signals (RS422) from a SSI encoder. It can be connected as a master directly to the encoder providing the clock. To synchronize two SSI encoders a second SSI module running in Listening mode can be placed between the encoder and a master module from which it receives the clock.

The data transfer rate can be between 125 kHz and 2 MHz, the data format can be chosen between binary or Gray-Code.

Connected sensors can be delivered either with 5Vdc or 24Vdc. Both supply outputs are protected against overcurrent and must not be used simultaneously.

The communication status is indicated by three LEDs. The module electronics supply the connected sensor with power from the input current path (IIN).

Note: The SSI encoder must be connected using a shielded wire (maximum length 320m at 125 kHz). The shielding has to be designed as described in Section, Earthing of Shielded Cables.

5.20.1 LED Indicators EP-5311

Module Status	**Green**: Communication over the system bus **Red**: Module System Fault or Diagnostic Fault
1.1	**Yellow**: Data In active
1.2	--
1.3	--
1.4	--
2.1	**Yellow**: Data In active
2.2	--
2.3	--
2.4	--
3.1	**Yellow**: Data In active
3.2	--
3.3	--
3.4	--
4.1	**Green**: Power supply sensor +5Vdc
4.2	--
4.3	**Green**: Power supply sensor +24Vdc
4.4	--

For error messages refer to Section 12, LED Indicators and Troubleshooting.

Figure 152: Block Diagram EP-5311

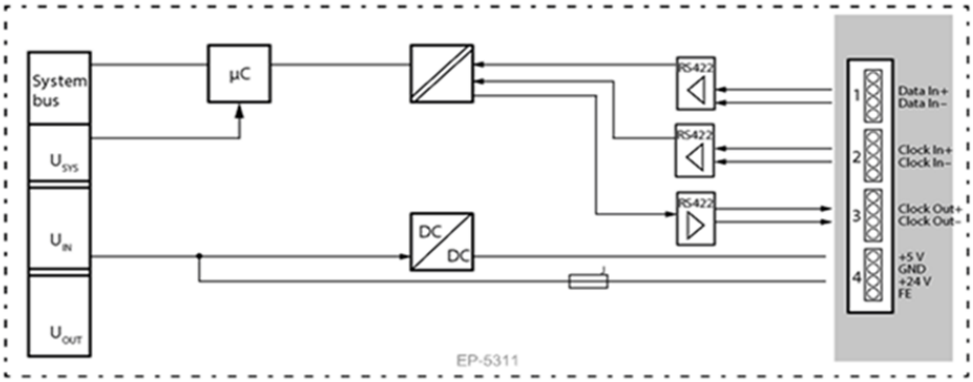

5.20.2 Specifications EP-5311

Specification	Description
System data	
Data	Process, parameter and diagnostic data depend on the network Adapter used (refer to Section 3.1, Order and Arrangement of Modules).
Interface	RSTi-EP I/O communication bus
System bus transfer rate	48 Mbps
Number of channels	1
Type	SSI (Differential RS422)
SSI transfer rate	125 kHz ... 2 MHz
Delay time	1µs ... 64µs
Data width	8- ... 32-bit
Data format	Binary / Gray-Code
SSI mode	Listening / Master
Sensor supply	500 mA (24Vdc) / 400 mA (5Vdc)
Reverse polarity protection	Yes
Module diagnosis	Yes
Individual channel diagnosis	No
Cable length	max. 320 m (1049.9 ft) at 125 kHz; shielded
Supply	
Supply voltage	20.4V – 28.8V
Current consumption from system current path ISYS,	8 mA
Current consumption from input current path IIN	25 mA + sensor supply current
General data	
Weight	87 g (3.07 oz)
For additional general data, refer to Section, General Technical Data for I/O Modules.	

5.20.3 Modifiable Parameters for EP-5311

Channel	Description	Options[7]	Default
0	Delay time	1µs (0) / 2µs (1) / 4µs (2) / 8µs (3) / 16µs (4) / 32µs (5) / 48µs (6) / 64µs (7)	64µs
0	SSI transfer rate	125 kHz (0) / 250 kHz (1) / 500 kHz (2) /	125 kHz

[7] Values in brackets for Modbus-TCP and EtherCAT.

Channel	Description	Options[7]	Default
		1 MHz (3) / 1.5 MHz (4) / 2 MHz (5)	
0	Number of indicator bits	0 ... 15	0
0	Number of frame data bits	8 Bit (0) / 9 Bit (1) / 10 Bit (2) / ... / 31 Bit (23) / 32-bit (24)	25 Bit
0	SSI mode	Listening (0) / Master (1)	Master
0	Bit order	MSB first (0) / LSB first (1)	MSB first
0	Data evaluation at edge	1 to 0 (0) / 0 to 1 (1)	1 to 0
0	Data format	Binary (0) / Gray-Code (1)	Gray-Code
0	SSI interface	Disabled (0) / enabled (1)	Disabled

5.20.4 Diagnostic Data EP-5311

Name	Bytes	Bit	Description	Default
Error indicator	0	0	Module error	
		1	Internal error	
		2	External error	
		3	Channel error	0
		4	Error	
		5	Reserved	0
		6	Reserved	0
		7	Parameter error	
Module type	1	0	Module Type 0x05	1
		1		0
		2		1
		3		0
		4	Reserved	0
		5	Reserved	0
		6	Reserved	0
		7	Reserved	0
Error byte 2	2	0-7	Reserved	0
Error byte 3	3	0-2	Reserved	0
		3	Internal diagnostic FIFO full	1
		4-7	Reserved	0
Channel type	4	0	Channel type 0x79	1
		1		0
		2		0
		3		1
		4		1
		5		1
		6		1
		7		0

Name	Bytes	Bit	Description	Default
Diagnostic bits per channel	5		Number of diagnostic bit per channel	0
Number of channels	6		Number of similar channels per module	1
Channel error	7-10	0-31	Reserved	0
Channel 0 error to Channel 31 error	11 to 42	0–7	Reserved	0
Time stamp	43-46		Time stamp [µs] (32-bit)	

5.20.5 Process Data Inputs EP-5311

Byte	Format	Description
IB0	Double word	Encoder Value
IB1		
IB2		
IB3		
IB4	Word	16 Bit Time Stamp
IB5		
Internal process data mapping with data format "Standard". Depending on the fieldbus specification and the data format of the communicating fieldbus components the bytes and/or the words can be reversed during the data transfer. For byte/word order for each network adapter refer to Section, Data Width of I/O Module, Dependent on the Network Adapter Used.		

5.21 Digital Pulse Width Modulation Output Module EP-5422

Figure 153: Digital Pulse Width Modulation Output Module EP-5422

Figure 154: Connection Diagram EP-5422

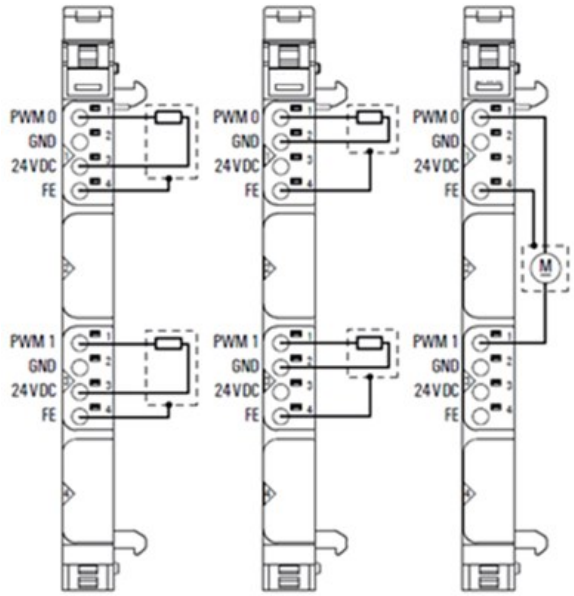

The digital pulse width modulation module EP-5422 is used for the control of small motors with current requirements of up to 0.5 A. The period duration for each channel can be parameterized from 25µs to approx. 175ms (input values from 1,202 to 8,388,607 based on a factor 0.02083µs).

Via an output double word in the process data the pulse duration is defined from 0µs to approx. 175ms for each channel (input values from 0 to 8,388,607 based on a factor 0.02083µs). If the pulse duration is equal or exceeds the duration of the period, the output is set permanently.

In another output word the output mode is switched, and the output is being started and stopped. Deactivated outputs are set to GND.

For each channel the current status can be read in a status word. A status LED is assigned to each channel. The outputs are supplied with power from the output current path (IOUT). The module is protected against external voltages between 0 V and the operating voltage.

5.21.1 LED Indicators EP-5422

Module Status	**Green**: Communication over the system bus **Red**: Module System Fault or Diagnostic Fault
1.1	**Yellow**: PWM output 0 – 100%, P-switching **Yellow flashing at 2 Hz**: PWM output 0 is > 0 and < 100%, PN-switching or P-switching
1.2	--
1.3	--
1.4	--
2.1	--
2.2	--
2.3	--
2.4	--
3.1	**Yellow**: PWM output 1 – 100%, P-switching **Yellow flashing at 2 Hz**: PWM output 0 is > 0 and < 100%, PN-switching or P-switching
3.2	--
3.3	--
3.4	--
4.1	--
4.2	--
4.3	--
4.4	--

For error messages refer to Section 12, LED Indicators and Troubleshooting.

Figure 155: Block Diagram EP-5422

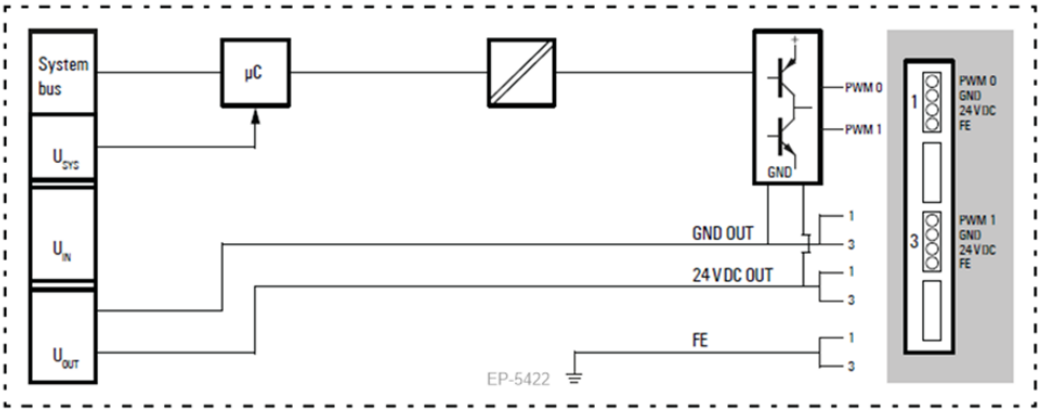

5.21.2 Specifications EP-5422

Specification	Description	
System data		
Data	Process, parameter and diagnostic data depend on the network adapter used (refer to Section 3.1, Order and Arrangement of Modules).	
Interface	RSTi-EP I/O communication bus	
System bus transfer rate	48 Mbps	
Outputs		
Number	2	
Type	PN output stage	
Response time	< 0.1µs	
Period duration	25µs to 175ms (40 kHz to 6 Hz)	
Max. output current	per channel	0.5 A
	per module	1 A
Switching frequency	Resistive load (min. 47Ω)	static, 6 Hz to 40 kHz
	Inductive load (DC 13)	static, 6 Hz to 40 kHz
	Lamp load (12 W)	static, 6 Hz to 40 kHz
Actuator connection	2-wire, 3-wire, 3-wire + FE	
Actuator supply	max. 2 A per plug, total max. 4 A	
Pulse/period ratio	0–100 % PN-switching or P-switching, adjustable	
Short-circuit-proof	Yes	
Response time of the protective circuit	< 100µs	
Module diagnosis	Yes	
Individual channel diagnosis	No	
Reactionless	Yes	
Supply		
Supply voltage	20.4V – 28.8V	
Current consumption from system current path ISYS, typ.	8 mA	
Current consumption from output current path IOUT	40 mA	
General data		
Weight	77 g (2.72 oz)	

Specification	Description
For additional general data, refer to Section, General Technical Data for I/O Modules.	

5.21.3 Modifiable Parameters for EP-5422

Channel	Description	Options	Default
0 - 1	Period duration = n*0.02083µs	1,202 ... 8,388,607	1,202

5.21.4 Diagnostic Data EP-5422

Name	Bytes	Bit	Description	Default
Error indicator	0	0	Module error	
		1	Internal error	
		2	External error	
		3	Channel error	0
		4	Error	
		5	Reserved	0
		6	Reserved	0
		7	Parameter error	
Module type	1	0	Module Type	0x0F
		1		
		2		
		3		
		4	Reserved	0
		5	Reserved	0
		6	Reserved	0
		7	Reserved	0
Error byte 2	2	0-7	Reserved	0
Error byte 3	3	0-2	Reserved	0
		3	Internal diagnostic FIFO full	
		4-7	Reserved	0
Channel type	4	0-6	Channel type	0x72
		7	Reserved	0
Diagnostic bits per channel	5		Number of diagnostic bit per channel	0
Number of channels	6		Number of similar channels per module	2
Channel error	7-10	0-31	Reserved	0
Channel 0 error to Channel 31 error	11 to 42	0–7	Reserved	0
Time stamp	43-46		Time stamp [µs] (32-bit)	

5.21.5 Process† Data Inputs EP-5422

Byte	Format	Name	Bit	Function, if active	Remarks
IB0	Word	Channel 0: Status word	IX0.0	reserved	
			IX0.1	Status PWM output	0: disabled, 1: enabled
			IX0.2	reserved	

Byte	Format	Name	Bit	Function, if active	Remarks
			IX0.3	Output mode	0: PN-switching 1: P-switching
			IX0.4 ... 0.7	reserved	
IB1			IX1.0 ... 1.7	reserved	
IB2	Word	Channel 1: Status word	IX2.0	reserved	
			IX2.1	Status PWM output	0: disabled, 1: enabled
			IX2.2	reserved	
			IX2.3	Output mode	0: PN-switching 1: P-switching
			IX02.4 ... 2.7	reserved	
IB3			IX3.0 ... 3.7	reserved	
† Internal process data mapping with data format Standard. Depending on the fieldbus specification and the data format of the communicating fieldbus components the bytes and/or words can be reversed during data transfer.					

5.21.6 Process Data† Outputs EP-5422

Byte	Format	Name	Bit	Function, if set	Remarks
QB0	Double Word	Channel 0: Pulse duration			Input value * 0.02083µs Input range: 1 ... 8,388,607
QB1					
QB2					
QB3					
QB4	Double Word	Channel 1: Pulse duration			Input value * 0.02083µs Input range: 1 ... 8,388,607
QB5					
QB6					
QB7					
QB8	Word	Channel 0: Control word	QX8.0 ... QX8.1	reserved	
			QX8.2	Output mode	0: PN-switching 1: P-switching
			QX8.3 ... QX8.7	reserved	
QB9			QX9.0	starts output	Setting with edge 0-1, dominates stop bit
			QX9.1	stops output	Setting with edge 0-1, start bit must be reset
			QX9.2 ... QX9.7	reserved	
QB10	Word	Channel 1: Control word	QX10.0 ... QX10.1	reserved	
			QX10.2	Output mode	0: PN-switching 1: P-switching
			QX10.3 ... QX10.7	reserved	
QB11			QX11.0	starts output	Setting with edge 0-1, dominates stop bit
			QX11.1	stops output	Setting with edge 0-1, start bit must be reset
			QX11.2 ... QX11.7	reserved	
† Internal process data mapping with data format Standard. Depending on the fieldbus specification and the data format of the communicating fieldbus components the bytes and/or words can be reversed during data transfer.					

5.22 Digital Pulse Width Modulation Output Module EP-5442

Figure 156: Digital Pulse Width Modulation Output EP-5422

Figure 157: Connection Diagram EP-5442 Output Module EP 5442

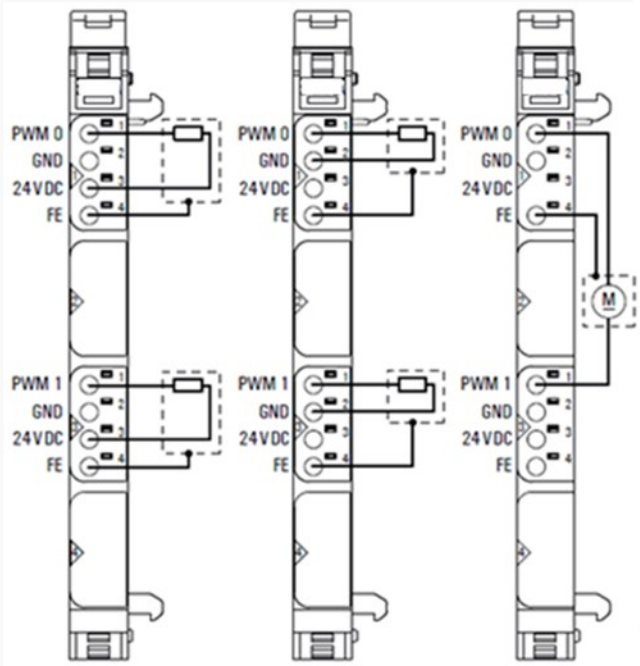

The digital pulse width modulation modules EP-5442 is used for the control of small motors with current requirements of up to 2 A. The period duration for each channel can be parameterized from 25µs to approx. 175ms (input values from 1,202 to 8,388,607 based on a factor 0.02083µs).

Via an output double word in the process data the pulse duration is defined from 0µs to approx. 175ms for each channel (input values from 0 to 8,388,607 based on a factor 0.02083µs).

If the pulse duration exceeds the duration of the period, the output is set permanently. In another output word the output mode is switched, and the output is being started and stopped. Deactivated outputs are set to GND.

For each channel the current status can be read in a status word. A status LED is assigned to each channel. The outputs are supplied with power from the output current path (IOUT). The module is protected against external voltages between 0 V and the operating voltage.

5.22.1 LED Indicators EP-5442

	Module Status	**Green**: Communication over the system bus **Red**: Module System Fault or Diagnostic Fault
	1.1	**Yellow**: PWM output 0 – 100%, P-switching **Yellow flashing at 2 Hz**: PWM output 0 is > 0 and < 100%, PN-switching or P-switching
	1.2	
	1.3	
	1.4	
	2.1	
	2.2	
	2.3	
	2.4	
	3.1	**Yellow**: PWM output 1 – 100%, P-switching **Yellow flashing at 2 Hz**: PWM output 0 is > 0 and < 100%, PN-switching or P-switching
	3.2	
	3.3	
	3.4	
	4.1	
	4.2	
	4.3	
	4.4	

For error messages refer to Section 12, LED Indicators and Troubleshooting.

Figure 158: Block Diagram EP-544

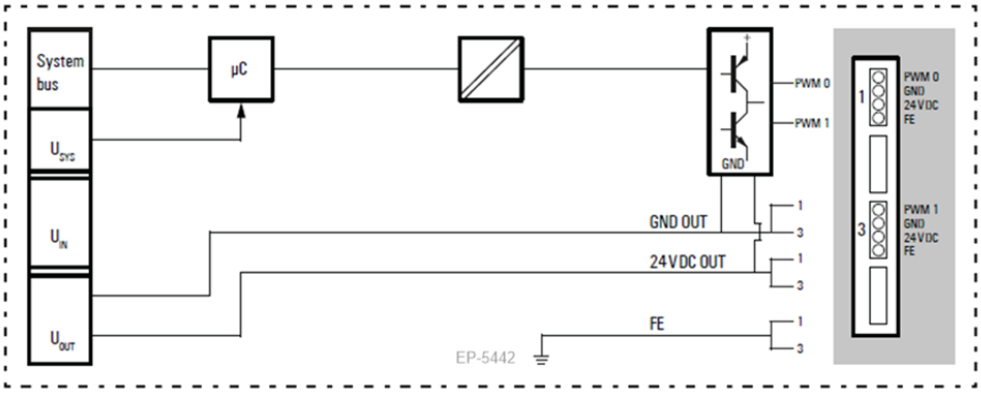

5.22.2 Specifications EP-5442

Specifications	Description	
System data		
Data	Process, parameter and diagnostic data depend on the network adapter used (refer to Section, Order and Arrangement of Modules).	
Interface	RSTi-EP I/O communication bus	
System bus transfer rate	48 Mbps	
Outputs		
Number	2	
Type	PN output stage	
Response time	< 0.1µs	
Period duration	25µs to 175ms (40 kHz to 6 Hz)	
Max. output current	per channel	2 A
	per module	4 A
Switching frequency	Resistive load (min. 12 Ω)	6 Hz to 40 kHz
	Inductive load (DC 13)	6 Hz to 40 kHz
	Lamp load (48 W)	6 Hz to 40 kHz
Actuator connection	2-wire, 3-wire, 3-wire + FE	
Actuator supply	max. 2 A per plug, total max. 8 A	
Pulse/period ratio	0–100 % PN-switching or P-switching, adjustable	
Short-circuit-proof	Yes	
Response time of the protective circuit	< 100µs	
Module diagnosis	Yes	
Individual channel diagnosis	No	
Reactionless	Yes	
Supply		
Supply voltage	20.4V – 28.8V	
Current consumption from system current path ISYS, typ.	8 mA	
Current consumption from output current path IOUT	40 mA	
General data		
Weight	82 g (2.89 oz)	

5.22.3 Modifiable Parameters for EP-5442

Channel	Description	Options	Default
0 - 1	Period duration = n*0.02083µs	1,202 ... 8,388,607	1,202

5.22.4 Diagnostic Data EP-5442

Name	Bytes	Bit	Description	Default
Error indicator	0	0	Module error	
		1	Internal error	
		2	External error	
		3	Channel error	0
		4	Error	
		5	Reserved	0
		6	Reserved	0
		7	Parameter error	
Module type	1	0	Module Type	0x0F
		1		
		2		
		3		
		4	Reserved	0
		5	Reserved	0
		6	Reserved	0
		7	Reserved	0
Error byte 2	2	0-7	Reserved	0
Error byte 3	3	0-2	Reserved	0
		3	Internal diagnostic FIFO full	
		4-7	Reserved	0
Channel type	4	0-6	Channel type	0x72
		7	Reserved	0
Diagnostic bits per channel	5		Number of diagnostic bit per channel	0
Number of channels	6		Number of similar channels per module	2
Channel error	7-10	0-31	Reserved	0
Channel 0 error to Channel 31 error	11 to 42	0–7	Reserved	0
Time stamp	43-46		Time stamp [µs] (32-bit)	

5.22.5 Process† Data Inputs EP-5442

Byte	Format	Name	Bit	Function, if active	Remarks
IB0	Word	Channel 0: Status word	IX0.0	reserved	
			IX0.1	Status PWM output	0: disabled, 1: enabled
			IX0.2	reserved	
			IX0.3	Output mode	0: PN-switching 1: P-switching
			IX0.4 ... 0.7	reserved	
IB1			IX1.0 ... 1.7	reserved	
IB2	Word	Channel 1: Status word	IX2.0	reserved	
			IX2.1	Status PWM output	0: disabled, 1: enabled
			IX2.2	reserved	
			IX2.3	Output mode	0: PN-switching 1: P-switching
			IX02.4 ... 2.7	reserved	
IB3			IX3.0 ... 3.7	reserved	
† Internal process data mapping with data format Standard. Depending on the fieldbus specification and the data format of the communicating fieldbus components the bytes and/or words can be reversed during data transfer					

5.22.6 Process Data† Outputs EP-5442

Byte	Format	Name	Bit	Function, if set	Remarks
QB0	Double Word	Channel 0: Pulse duration			Input value * 0.02083µs Input range: 1 ... 8,388,607
QB1					
QB2					
QB3					
QB4	Double Word	Channel 1: Pulse duration			Input value * 0.02083µs Input range: 1 ... 8,388,607
QB5					
QB6					
QB7					
QB8	Word	Channel 0: Control word	QX8.0 ... QX8.1	reserved	
			QX8.2	Output mode	0: PN-switching 1: P-switching
			QX8.3 ... QX8.7	reserved	
QB9			QX9.0	starts output	Setting with edge 0-1, dominates stop bit
			QX9.1	stops output	Setting with edge 0-1, start bit must be reset
			QX9.2 ... QX9.7	reserved	
QB10	Word	Channel 1: Control word	QX10.0 ... QX10.1	reserved	
			QX10.2	Output mode	0: PN-switching 1: P-switching
			QX10.3 ... QX10.7	reserved	
QB11			QX11.0	starts output	Setting with edge 0-1, dominates stop bit
			QX11.1	stops output	Setting with edge 0-1, start bit must be reset
			QX11.2 ... QX11.7	reserved	
† Internal process data mapping with data format Standard. Depending on the fieldbus specification and the data format of the communicating fieldbus components the bytes and/or words can be reversed during data transfer.					

5.23 IO-Link Communication module EP-5324

Figure 159: IO-Link Communication module

Figure 160: Connection diagram EP-5324

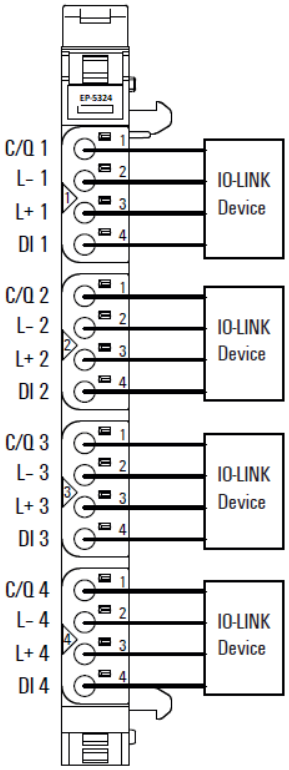

The EP-5324 module is an IO-Link master according to the IO-Link specification V1.1.2. One IO-Link device can be connected to each connector. The IO-Link devices must conform to port class A. Port class B is also possible if additionally, potential distribution modules are used. One digital input can be used additionally with each connector.

Process data are exchanged with the connected IO-Link device via each IO-Link port. Additionally, acyclic data can be exchanged over here (diagnostic data, parameter data, status information data). The parameter data of the connected IO-Link devices can be stored in the master module, where they are managed by a parameterizing server (data-storage). Thereby it is very comfortable to change the IO-Link communication module or a single IO-Link device (from IO-Link specification V1.1 on).

The four communication channels can be used as digital inputs or outputs together with standard field devices. A status LED is assigned to each channel. The module electronics supply the connected sensors with power from the input current path (IIN). The inputs are protected against voltage surges and overcurrent. Voltages that exceed ±30 V may cause the destruction of the module.

Note: The module can be used with following Network adapters- 1. EPXPBS001 2. EPXPNS001/EPXPNS101 3. EPXETC001 4. EPXMBE001/EPXMBE101 5. EPXEIP001

5.23.1 IO-Link overview

Figure 161: IO-Link for automation technology

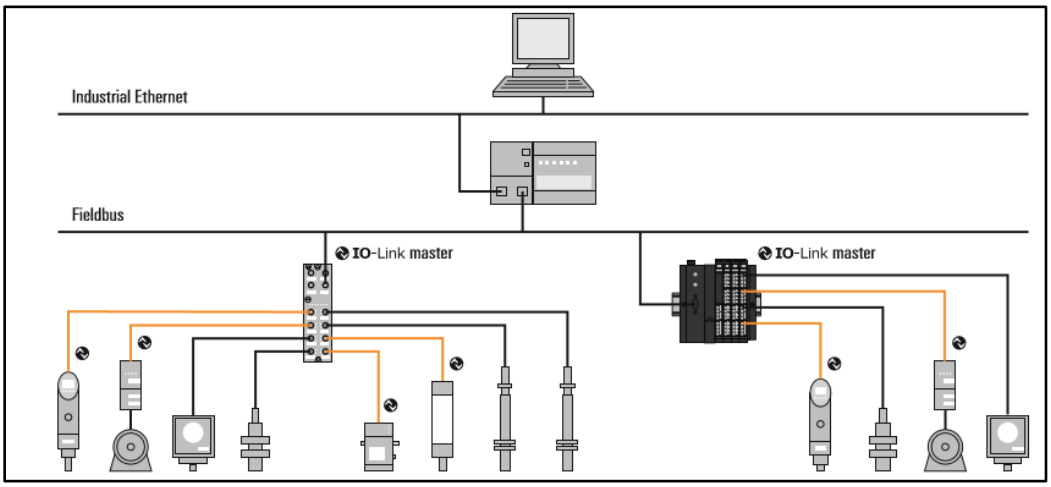

IO-Link is a communication protocol for automation technology. IO-Link enables serial, bi-directional point-to-point communication between devices on the sensor-actuator level and devices on the field level or control level. Besides cyclic process data, IO-Link allows parameters, diagnoses and identification data to be exchanged acyclically. IO-Link is standardized worldwide in IEC 61131-9 under the designation “single-drop communication interface for small sensors and actuators” (SDCI).

An IO-Link system consists of two components:

- **IO-Link Master:** represents the interface between IO-Link devices and the superordinate communication system.
- **IO-Link Device:** communication-capable field device, e.g. a sensor which is controlled by an IO-Link master.

IO-Link master and IO-Link device communicate via the switching and communication cable C/Q. The IO-Link device is supplied with voltage by the IO-Link master via the L+ and L- cables. Depending on the port class, an IO-Link port has additional connections:

- **Port class A:** The function of the additional connections is selected by the manufacturer. Often, this connection is occupied with an additional digital input or output.
- **Port class B:** The IO-Link master provides a second supply voltage via two further connections.

An IO-Link device is connected with an IO-Link port of the IO-Link master with 3-cable or 5-cable technology.

Figure 162: IO-Link communication principle

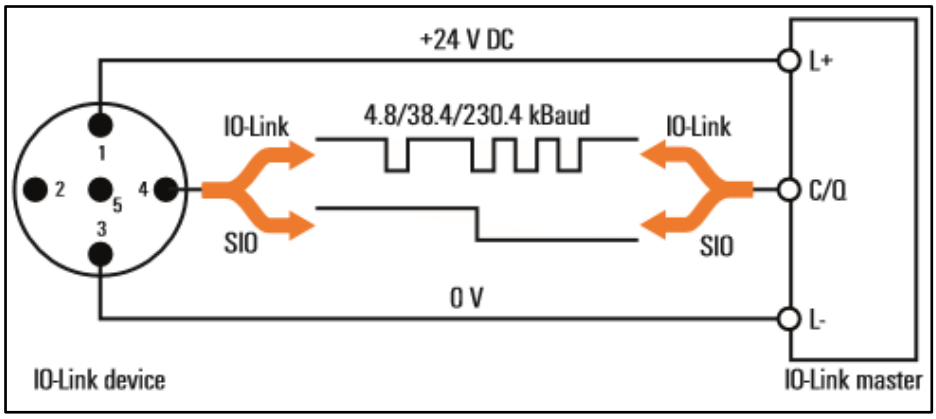

The IO-Link ports can be operated in IO-Link mode for bidirectional communication or in SIO mode as digital inputs or outputs. In IO-Link mode, the IO-Link master automatically sets the right transmission rate for IO-Link communication after activation. The IO-Link master then checks the identity of the IO-Link device (device comparison). The Data Storage function ensures correct parameterization of the IO-Link device after replacement of IO-Link device or IO-Link master without additional programming.

You can parameterize IO-Link devices using a configuration application or by means of acyclic services. To do so, you will need the device description files from the IO-Link device-manufacturer (IODDs). You can search for and download IODDs using the “IODDfinder” on the IO-Link Consortium website.

Note: You will find more information on IO-Link and IODDs at http://www.io-link.com.

A plug-in connector corresponds to an IO-Link port of type A.

Connector	Connection	Signal	Function
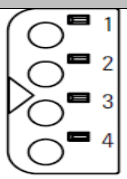	1	C/Q	IO-Link communication
	2	L-	GND IN
	3	L+	24 V DC IN
	4	DI	Digital input (type 1)

The numbering of the channels in the RSTi-EP system differs from the numbering of the IO-Link port as per the IO-Link specification. The following table shows the assignment of plug-in connectors and channels to IO-Link ports for the EP-5324 IO-Link communication module.

Plug-in connector	IO-Link port	Channel
1	1	0
2	2	1
3	3	2
4	4	3

Note: Use unshielded cable of maximum 20 m length to connect IO-Link devices.

Connecting IO-Link device for class A port

Figure 163: Connection IO-Link device for class A port (DI Connection optional)

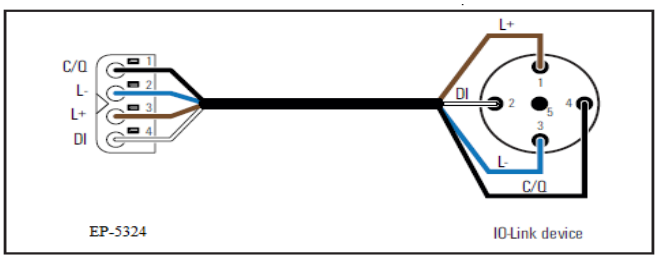

Note: The use of the additional digital input at the DI connection is optional. It can be use as digital input, e.g. if the IO-Link device provides an additional switching signal.

Connecting IO-Link device for class B port

To connect an IO-Link device with class B port to your RSTi-EP station, you also need the following potential distribution modules:

1. For input Current Path
   - EP-711F
   - EP-710F
2. For output current Path
   - EP-751F
   - EP-700F

Figure 164: Connecting IO-Link Device for Class B

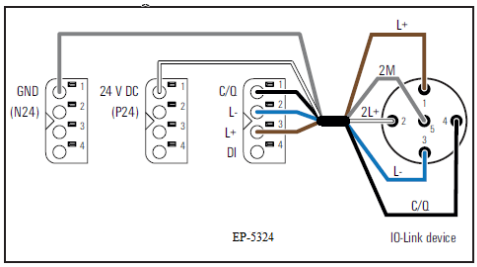

a. Install the three modules in a RSTi-EP station.
b. Connect the IO-Link device as shown in the above figure.

Attention

The module can be destroyed!
The Voltage between C/Q and L- Must not exceed the voltage between L+ and L-

- If the connected I/O Link devices uses the C/Q input, you have to support the I/O Link device via L+ and L- on same plug only.

Connecting sensor to C/Q

Figure 165: Connecting sensor to C/Q

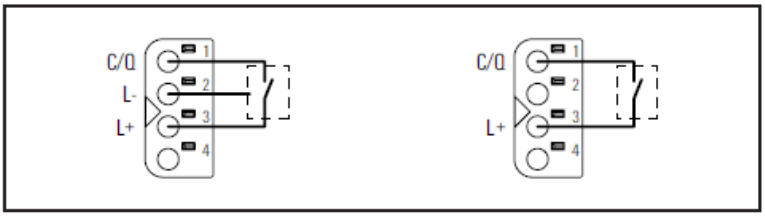

Connecting sensor to DI

Figure 166: Connecting sensor to DI

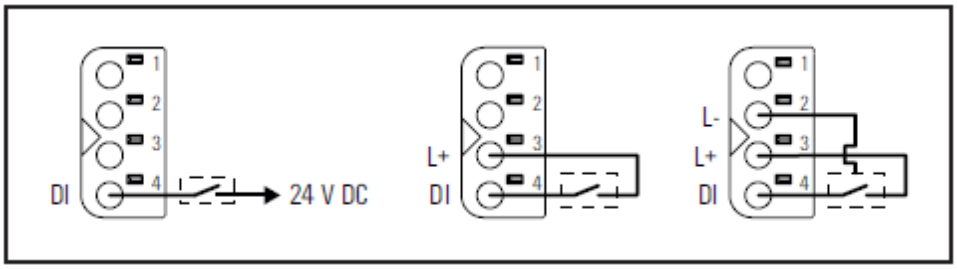

Connect load to C/Q

Figure 167: Connecting load to C/Q

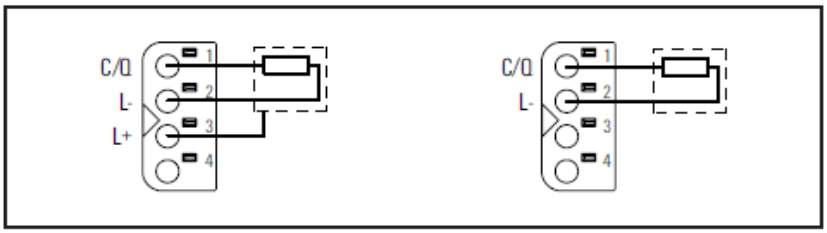

5.23.2 LED Indicators EP-5324

Module Status	**Green**: Communication over the system bus **Red**: Module System Fault or Diagnostic Fault
1.1	**Yellow**: Status COM 1
1.2	**Red:** Error IO-Link port 1
1.3	
1.4	**Yellow:** Status DI 1
2.1	**Yellow**: Status COM 2
2.2	**Red:** Error IO-Link port 2
2.3	
2.4	**Yellow:** Status DI 2
3.1	**Yellow**: Status COM 3
3.2	**Red:** Error IO-Link port 3
3.3	
3.4	**Yellow:** Status DI 3
4.1	**Yellow**: Status COM 4
4.2	**Red:** Error IO-Link port 4
4.3	
4.4	**Yellow:** Status DI 4

Figure 168: Block Diagram EP-5324

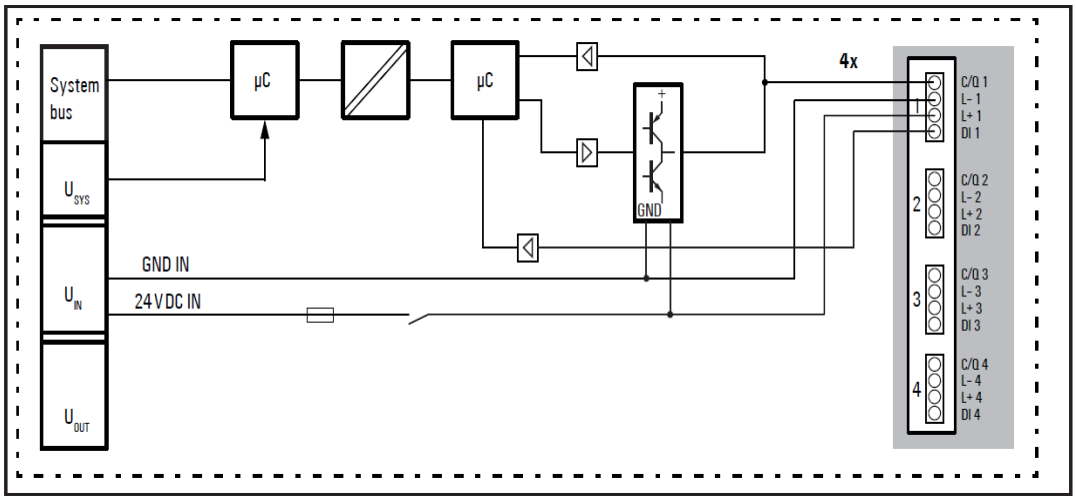

5.23.3 Specifications EP-5324

Specifications	Description
System data	
Data	Process, parameter and diagnostic data depend on the network adapter used (refer to Section Order and Arrangement of Modules).
Interface	RSTi-EP I/O communication bus
System bus transfer rate	48 Mbps
Digital Inputs	
Number	4
Sensor types	Type 1 and Type 3 as per IEC 61131-2
Low input voltage	< 5V
High input voltage	> 11V
IO-Link Interfaces	
Number	4
Type	IO-Link as per IEC 61131-9
Transfer rate	4.8 kBaud / 38.4 kBaud / 230.4 kBaud, depending on the connected IO-Link device
Output current C/Q (in DO mode)	0.1 A
Input type C/Q (in DI mode)[1)]	Type 1 and Type 3 as per IEC 61131-2
Output current L+	0.5 A per channel, Total max. 2 A
Line Break Detection	yes
Short-circuit-proof	yes
Module diagnosis	yes
Individual channel diagnosis	yes
Supply	
Supply voltage	20.4V – 28.8V
Current consumption from system current path I_{SYS}, typ.	8 mA
Current consumption from input current path I_{IN}	25 mA + sensor supply
General data	
Type of connection	''PUSH IN''
Weight	88 g (3.10 oz)
Height	120.0 mm / 4.72" (with release lever: 128.0 mm / 5.04")
Width	11.5 mm / 0.45''
Depth	76.0 mm / 2.99"
Protection class (IEC 60529)	IP 20
For additional general data, refer to Section General Technical Data for I/O Modules.	
[1)] If C/Q is used as digital input, the connected device shall only be supplied via L+ and L- connection of the respective channel.	

5.23.4 Modifiable Parameters for EP-5324

Channel	Description	Options[1)]	Default
0 ... 3	Operating mode	disabled (0) / DO (1) / DI (2) / IO-Link (3)	disabled

0 ... 3	Port Cycle	Free running (0) / Fixed cycle (1) / Message sync (2)	Free running
0 ... 3	Port Cycle time [n x 0.1 ms]	4 ... 1326	4
0 ... 3	IO-Link device check	disabled (0) / type compare (1) / identical (2)	disabled
0 ... 3	DS activation state	disabled (0) / enabled (1) / Clear (2)	disabled
0 ... 3	Channel diagnostics	Disabled (0) / enabled (2)	disabled
0 ... 3	Process data length input	0 Byte (0) / 1 Byte (1) / 2 Byte (2) / ... / 32 Byte (32) / auto (255)	auto
0 ... 3	Process data length output	0 Byte (0) / 1 Byte (1) / 2 Byte (2) / ... / 32 Byte (32) / auto (255)	auto
1)Values in brackets for EtherCAT.			

Note: For Configuration and parameterization, use the IO-Link Configurator Tool. Refer to Section ''IO-Link Device Configuration'' for more details.

Operating mode" parameter

The "Operation mode" parameter defines the function of the respective IO-Link port (C/Q, L+ and L- connections). The parameter does not influence the function of the additional digital input (DI connection).

Disabled (default)

The supply voltage at L+ and communication via C/Q are disabled.

DO

The C/Q connection works as a digital output. The length of the process output data for this IO-Link port is 1 byte.

DI

The C/Q connection works as a digital input. The length of the process input data for this IO-Link port is 1 byte.

IO-Link

The IO-Link port uses the C/Q connection for IO-Link communication. The length of the process data is determined by the "Process data IN length" and "Process data OUT length" parameters.

"Port cycle" parameter

The "Port cycle" parameter defines how the cycle time of the IO-Link port is determined.

Free running (default)

The cycle time of the IO-Link port is automatically set to match the IO-Link device connected.

Fixed cycle

The cycle time of the IO-Link port is set to the value which is defined by the "Port cycle time (n*0.1 ms)" parameter.

Note: The real cycle time of the IO-Link port depends on the IO-Link device connected. If you set a cycle time which is shorter than the minimum cycle time of the IO-Link device, the smallest possible cycle time is automatically set. The web view is not updated.

Message sync

All IO-Link ports with this parameter setting start simultaneously with message transmission. The IO-Link device with the longest cycle time at these IO-Link ports determines the cycle time.

Port cycle time (n*0.1 ms)" parameter

The "Port cycle time (n*0.1 ms)" defines the cycle time of the IO-Link port. This parameter is only relevant if the "Port cycle" parameter has been set to "Fixed value". According to the IO-Link specification, the cycle time is coded with a time base (2 bits) and a multiplier (6 bits). The coding is dependent on the cycle time

Cycle Time	Time base	Multipl.	Calculation
0, 4 ms ... 6,3 ms	0, 1 ms	4 ... 63 ms	Time Base x Multipl.
6, 4 ms ... 31,6 ms	0, 4 ms	0 ... 63 ms	6, 4 ms +Time Base x Multipl.
32, 0 ms ... 132, 8 ms	1, 6 ms	0 ... 63 ms	32, 0 ms +Time Base x Multipl.

"IO-Link device check" parameter

This function allows the identification characteristics of a connected IO-Link device to be checked. The transfer of the process data is only started once the characteristics match the values set in the IO-Link master.

disabled (default)

The function is disabled and there is no validation.

Type compare

The Vendor ID and the Device ID are compared.

Identical

The Vendor ID, the Device ID and the serial number are compared.

"DS activation state" parameter

The "DS activation state" activates the Data Storage function. The Data Storage function controls the parameter setting server of the IO-Link master. The parameter setting server manages the IO-Link device parameters, such that the IO-Link master or an IO-Link device (from IO-Link specification version 1.1) is very easy to replace.

disabled (default)

The Data Storage function is disabled. Parameter data already saved in IO-Link master is retained.

Enabled

The Data Storage function is enabled. Parameter data is exchanged between the IO-Link master and IO-Link device if an inconsistency is detected. The direction of replacement depends on the status of IO-Link master and IO-Link device. An upload of IO-Link device to the IO-Link master takes place if a connected IO-Link device requests an upload (upload flag set) or if there is no valid data in the IO-Link master. An IO-Link device requests an upload for each change in the IO-Link device parameter.
If the parameter data saved in the IO-Link master does not match the data on the connected IO-Link device and there have been no upload requests made by the IO-Link device, data is downloaded from the IO-Link master to the IO-Link device.

IO-Link master status	IO-Link device status	Action
No valid data	Upload flag set	Upload
No valid data	Upload flag not set	Upload
Valid data	Upload flag set	Upload
Valid data	Upload flag not set	Download

Clear

The Data Storage function is disabled. Parameter data already stored in the IO-Link master is deleted.

Note: If the Data Storage function is enabled, do not connect any IO-Link devices with unknown parameters to avoid saving incorrect parameters. Reset IO-Link devices to factory setting before you connect them.

"Channel diagnostics" parameter

The "Channel diagnostics" parameter activates channel diagnostics.

Disabled (default)

Channel diagnostics is disabled.

Enabled

Channel diagnostics is enabled.

"Process data length input" parameter

The "Process data length input" parameter defines how many bytes the process input data of the IO-Link master are occupied by the cyclic input data of the IO-Link device connected.

0 ... 32 bytes

The cyclic input data of the IO-Link device connected occupies 0 ... 32 bytes of the IO-Link master process input data.

auto (default)

The length of the cyclic input data is automatically set to the IO-Link device connected.

"Process data length output" parameter

The "Process data length output" parameter defines how many bytes of the IO-Link master process output data are occupied by the cyclic data of the IO-Link device connected.

0 ... 32 bytes

The cyclic output data of the IO-Link device connected occupies 0 ... 32 bytes of the IO-Link master process output data.

auto (default)

The length of the cyclic output data is automatically set to match the IO-Link device connected.

5.23.5 Diagnostic Data EP-5324

Name	Bytes	Bit	Description	Default
Error indicator	0	0	Module error	0
		1	Internal error	0
		2	External error	0
		3	Channel error	0
		4	Error	0
		5	Power supply fault	0
		6	Reserved	0
		7	Parameter error	0
Module type	1	0	Module Type	0x05
		1		
		2		
		3		
		4	Reserved	1
		5	Reserved	0
		6	Reserved	0
		7	Reserved	0
Error byte 2	2	0-7	Reserved	0
Error byte 3	3	0-2	Reserved	0
		3	Diagnostic Alarm Lost	0
		4	Communication fault	0
		5	Reserved	0
		6	Reserved	0
		7	IO-Link Event in Queue	0
Channel type	4	0	Channel type	1
		1		1
		2		0
		3		1
		4		1
		5		1
		6		1
		7	Reserved	0
Diagnostic bits per channel	5		Number of diagnostic bit per channel	16
Number of channels	6		Number of similar channels per module	4
Channel error	7	0	Error at channel 0	0
		1	Error at channel 1	0
		2	Error at channel 2	0

Name	Bytes	Bit	Description	Default
		3	Error at channel 3	0
		4 ... 7	Reserved	0
	8 ... 10	8 ... 31	Reserved	0
Error channel 0 Error channel 1 Error channel 2 Error channel 3	11 13 15 17	0	Short Circuit	0
		1	Undervoltage	0
		2	Overvoltage	0
		3	Overload	0
		4	Overtemperature	0
		5	Line Break	0
		6	Upper Limit Value	
		7	Lower Limit Value	0
Error channel 0 Error channel 1 Error channel 2 Error channel 3	12 14 16 18	0	Error	0
		1	Parameter fault	0
		2	Power supply fault	0
		3	Fuse blown	0
		4	Communication fault	0
		5	Error 1	0
		6	Unknown Error	
		7	Unknown Error 2	0
Error Channel 4 ... Error Channel 15	19 ... 42	0 ... 7	Reserved	0
Time stamp	43-46		Time stamp [µs] (32-bit)	

5.23.6 Process Data Inputs EP-5324

Byte	Bit	Description
IB0	IX0.0	DI 1
	IX0.1	DI 2
	IX0.2	DI 3
	IX0.3	DI 4
	IX0.4	C/Q 1
	IX0.5	C/Q 2
	IX0.6	C/Q 3
	IX0.7	C/Q 4
IB1	IX1.0	Process data IN valid IO-Link-Port 1
	IX1.1	Process data IN valid IO-Link-Port 2
	IX1.2	Process data IN valid IO-Link-Port 3
	IX1.3	Process data IN valid IO-Link-Port 4
	IX1.4	Error IO-Link-Port 1
	IX1.5	Error IO-Link-Port 2
	IX1.6	Error IO-Link-Port 3
	IX1.7	Error IO-Link-Port 4
IB2 ...		Process data of the IO-Link device[1)]
[1)]The process data of the IO-Link device depend on which module has been chosen from the device description file. The mapping of the IO-Link-devices depends on the length of their process data and the parameter settings.		

5.23.7 Process Data Outputs EP-5324

Byte	Bit	Description
OB0	OX0.0	DO 1
	OX0.1	DO 2
	OX0.2	DO 3
	OX0.3	DO 4
	OX0.4	reserved
	OX0.5	reserved
	OX0.6	reserved
	OX0.7	reserved
OB1	OX1.0	Process data OUT valid IO-Link-Port 1
	OX1.1	Process data OUT valid IO-Link-Port 2
	OX1.2	Process data OUT valid IO-Link-Port 3
	OX1.3	Process data OUT valid IO-Link-Port 4
	OX1.4	reserved
	OX1.5	reserved
	OX1.6	reserved
	IX1.7	reserved
OB2 ...	Process data of the IO-Link device[1)]	

[1)]The process data of the IO-Link device depend on which module has been chosen from the device description file. The mapping of the IO-Link-devices depends on the length of their process data and the parameter settings.

Figure 169: Process Data mapping (Configuration: EP-5324-16BYTE-INOUT)

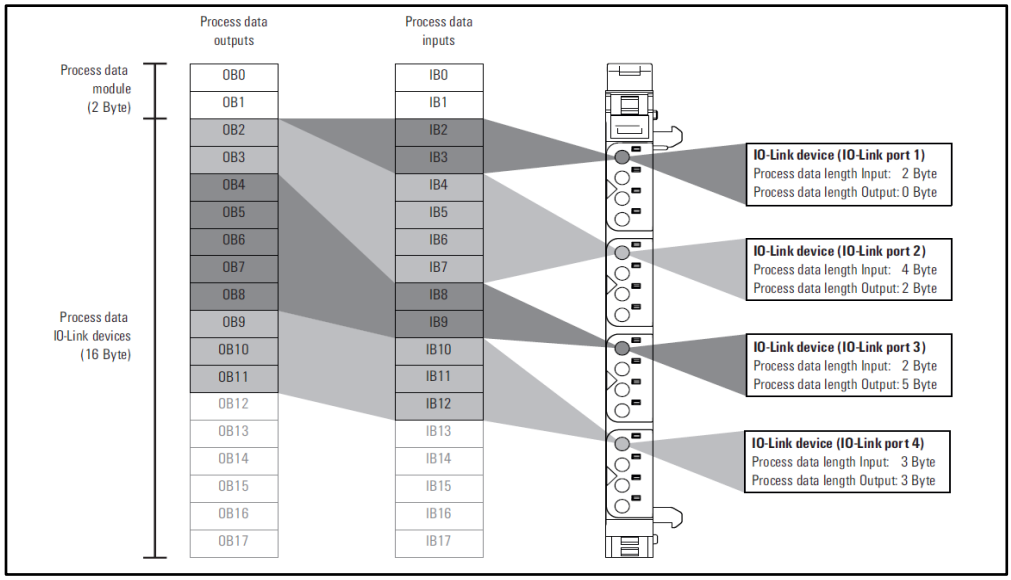

5.23.8 Network Adapters-Dependent Process data widths

The following tables show which process data lengths are available for the individual adapters, and the relevant fieldbus-dependent data widths.

Profibus-EPXPBS001

Process data for IO-Link devices IO-Link port		Network adapters dependent data widths[1)]	
Input-byte	Output-byte	Input-byte	Output-byte
4	4	6	6
8	8	10	10
16	16	18	18
32	32	34	34
16	8	18	10
32	16	34	18
32	8	34	10
[1)]incl. 2 Byte module process data			

Profinet -EPXPNS001/EPXPNS101

Process data for IO-Link devices IO-Link port		Network adapters dependent data widths[1)]	
Input-byte	Output-byte	Input-byte	Output-byte
4	4	6	6
8	8	10	10
16	16	18	18
32	32	34	34
64	64	66	66
128	128	130	130
16	8	18	10
32	16	34	18
32	8	34	10
64	8	66	10
64	16	66	18
64	32	66	34
128	8	130	10
128	16	130	18
128	32	130	34
128	64	130	66
[1)]incl. 2 Byte module process data			

EtherCAT-EPXETC001

Process data for IO-Link devices IO-Link port		Network adapters dependent data widths[1)]	
Input-byte	Output-byte	Input-byte	Output-byte
16	16	18	18
[1)]incl. 2 Byte module process data			

Modbus-EPXMBE001/EPXMBE101

Process data for IO-Link devices IO-Link port		Network adapters dependent data widths[1)]	
Input-byte	Output-byte	Input-byte	Output-byte
0 ... 62	0 ... 62	2 ... 64	2 ... 64
[1)]incl. 2 Byte module process data			

EtherNet/IP-EPXEIP001

Process data for IO-Link devices IO-Link port		Network adapters dependent data widths[1)]	
Input-byte	Output-byte	Input-byte	Output-byte
0 ... 128	0 ...128	2 ... 130	2 ... 130
[1)]incl. 2 Byte module process data			

5.23.9 IO-Link Communication module EP-5324 event codes

Event Node	Description
0xC101	Overcurrent at transmitter
0xC102	Overtemperature at transmitted
0xC103	Undervoltage at VDD
0xC104	Undervoltage at VDDH
0xC105	Undervoltage at L+
0xC106	Overcurrent at L+ shunt
0xC201	Error at Data Storage EEPROM access
0xFF21	A new connection has been established between the Master and the Device
0xFF22	The Device has not answered for three consequent Master requests
0xFF23	DS header settings does not match with the read IDs
0xFF24	The DS buffer overflows
0xFF25	A DS parameter cannot be accessed
0xFF91	Request DS upload

5.24 Analog Input Module EP-3164

Figure 170: Analog Input Module EP-3164

Figure 171: Connection Diagram EP-3164

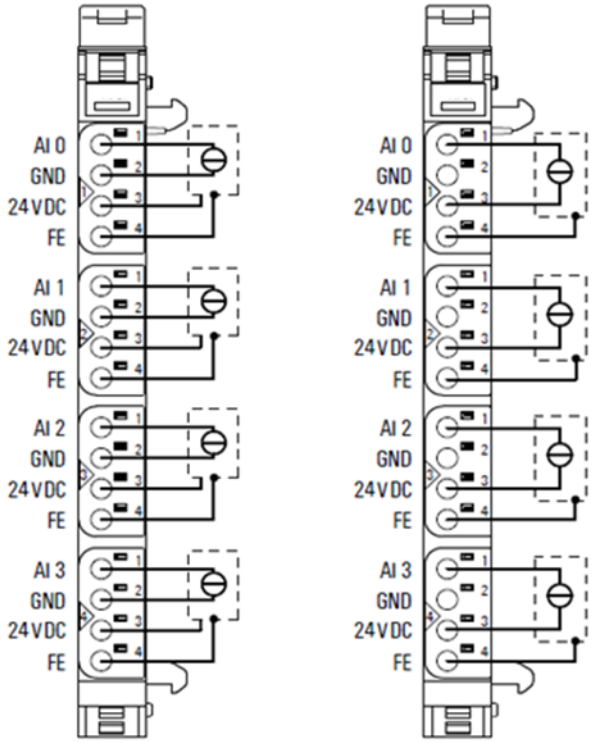

left: 3-/4-wire sensor with sensor wiring via electronics.

right: 2-wire sensor with sensor wiring via electronics.

The EP-3164 analog input module can record up to 4 analog sensors with ±10 V, ±5 V, 0-10 V, 0-5 V, 2-10 V, 1-5V, 0-20 mA or 4-20 mA. The resolution is 16 bits per channel. Sensors can be connected to each connector in a 2-wire, 3-wire or 3-wire connection + FE. The measurement range is defined using parameterization. A status LED is assigned to each channel. The module electronics supply the connected sensors with power from the input current path (IIN).

The inputs are protected against voltage surges and overcurrent. Voltages that exceed ±30 V may cause the destruction of the module. As a protection against overcurrent, the module temporarily switches to voltage mode.

5.24.1 LED Indicators EP-3164

	Module Status	**Green**: Communication over the system bus **Red:** Module System Fault or Diagnostic Fault
	1.1	**Red**: channel error
	1.2	--
	1.3	--
	1.4	--
	2.1	**Red**: channel error
	2.2	--
	2.3	--
	2.4	--
	3.1	**Red**: channel error
	3.2	--
	3.3	--
	3.4	--
	4.1	**Red:** channel error
	4.2	--
	4.3	--
	4.4	--

For error messages refer to Section 12, LED Indicators and Troubleshooting.

Figure 172: Block Diagram EP-3164

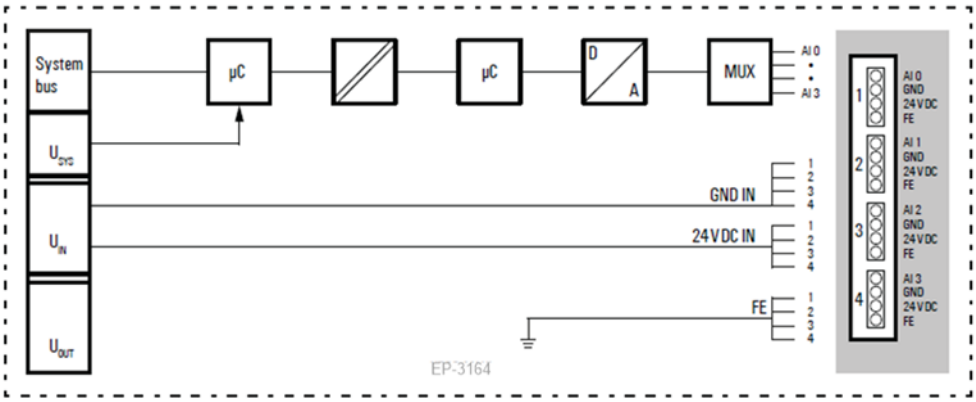

5.24.2 Specifications EP-3164

Specifications	Description	
System data		
Data	Process, parameter and diagnostic data depend on the network adapter used (refer to Section, Order and Arrangement of Modules).	
Interface	RSTi-EP I/O communication bus	
System bus transfer rate	48 Mbps	
Inputs		
Number	4	
Input values	1. Voltage (0 ... 5 V, ±5 V, 0 ... 10 V, ±10 V, 1 ... 5 V, 2 ... 10 V) 2. Current (0 ... 20 mA, 4 ... 20 mA)	
Resolution	16 bits	
Accuracy	0.1 % max. 50 ppm/K max. max. –10 mV/A	at 25 °C (77 °F) Temperature coefficient additional inaccuracy in the voltage mode due to sensor power supply current
Sensor supply	max. 2 A per plug, total max. 8 A	
Sensor connection	2-wire, 3-wire, 3-wire + FE	
Conversion time	1ms	
Internal resistance	U: 100 kΩ; I: 41.2 Ω	
Reverse polarity protection	Yes	
Short-circuit-proof	Yes	
Response time of the protective circuit	< 50ms	
Module diagnosis	Yes	
Individual channel diagnosis	No	
Supply		
Supply voltage	20.4V – 28.8V	
Current consumption from system current path ISYS,	8 mA	
Current consumption from input current path IIN	25 mA + sensor supply current	
General data		
Weight	89 g (3.14 oz)	
For additional general data, refer to Section,		

General Technical Data for I/O Modules.

5.24.3 Modifiable Parameters for EP-3164

Channel	Description	Options	Default
	Frequency suppression	disabled (0) / 50 Hz (1) / 60 Hz (2) / Average over 16 values (3)	disabled
0 ... 3	Measurement range	0 to 20 mA (0) / 4 to 20 mA (1) / 0 V to 10 V (2) / -10 to 10 V (3) / 0 to 5 V (4) / -5 to 5 V (5) / 1 to 5 V (6) / 2 to 10 V (7) / disabled (8)	disabled

5.24.4 Diagnostic Data EP-3164

Name	Bytes	Bit	Description	Default
Error indicator	0	0	Module error	
		1	Internal error	
		2	External error	
		3	Channel error	0
		4	Error	
		5	Reserved	0
		6	Reserved	0
		7	Parameter error	
Module type	1	0	Module Type	0x05
		1		
		2		
		3		
		4	Reserved	0
		5	Reserved	0
		6	Reserved	0
		7	Reserved	0
Error byte 2	2	0-7	Reserved	0
Error byte 3	3	0-2	Reserved	0
		3	Internal diagnostic FIFO full	
		4	Power supply fault	
		5	Reserved	0
		6	Reserved	0
		7	Reserved	0
Channel type	4	0-6	Channel type	0x74
		7	Reserved	0
Diagnostic bits per channel	5		Number of diagnostic bit per channel	0
Number of channels	6		Number of similar channels per module	4

Channel error	7-10	0-31	Reserved	0
Channel 0 error to Channel 31 error	11 to 42	0–7	Reserved	0
Time stamp	43-46		Time stamp [µs] (32-bit)	

5.24.5 Process Data† Inputs EP-3164

Byte	Format	Description	Remarks
IB0	Word	AI0	
IB1			
IB2	Word	AI1	
IB3			
IB4	Word	AI2	
IB5			
IB6	Word	AI3	
IB7			
† Internal process data mapping with data format “Standard”. Depending on the fieldbus specification and the data format of the communicating fieldbus components the bytes and/or words can be reversed during data transfer			

5.24.6 Measurement Range EP-3164

Measurement range	Current (I) / Voltage (U)	Decimal (D)	Hexadecimal	Range	Conversion
0 – 20 mA	21.67 mA	29957	0x7505	Overloading	D = 27648 x I / 20 I = D x 20 / 27648
	20 mA	27648	0x6C00	Nominal range	
	10 mA	13824	0x3600		
	0 mA	0	0x0000		
4 – 20 mA	21.67 mA	29957	0x7505	Overloading	D = 27648 x (I – 4) / 16 I=(D x 16 / 27648)+ 4
	20 mA	27648	0x6C00	Nominal range	
	12 mA	13824	0x3600		
	4 mA	0	0x0000		
	3.6 mA	-691	0XFD4D	Underloading	
0 – 10 V	10.5V	29030	0x7166	Overloading	D = 27648 x U/10 I = D x 10 / 27648
	10 V	27648	0x6C00	Nominal range	
	5 V	13824	0x3600		
	0 V	0	0x0000		
±10 V	+10.5V	29030	0x7166	Overloading	D = 27648 x U / 10 U = D x 10 / 27648
	10 V	27648	0x6C00	Nominal range	
	5 V	13824	0x3600		
	0 V	0	0x0000		
	-5 V	-13824	0xCA00		
	-10 V	-27648	0x9400		
	-10.5V	-29030	8E9A	Underloading	
2 - 10 V	+10.5V	29376	0x72C0	Overloading	D = 27648 x (U – 2) / 8 U = D x 8 / 27648 + 2
	10 V	27648	0x6C00	Nominal range	
	6 V	13824	0x3600		
	2 V	0	0x0000		
	1.8V	-691	0XFD4D	Underloading	

Measurement range	Current (I) / Voltage (U)	Decimal (D)	Hexadecimal	Range	Conversion
1 - 5 V	5.25V	29376	0x72C0	Overloading	D = 27648 x (U – 1) / 4 U = (D x 4 / 27648) + 1
	5 V	27648	0x6C00	Nominal range	
	3 V	13824	0x3600		
	1 V	0	0x0000		
	0.9 V	-691	0XFD4D	Underloading	
0 – 5 V	5.25 V	29030	0x7166	Overloading	D = 27648 x U/5 I = D x 5 / 27648
	5 V	27648	0x6C00	Nominal range	
	2.5 V	13824	0x3600		
	0 V	0	0x0000		
±5 V	5.25 V	29376	0x72C0	Overloading	D = 27648 x (U – 1) / 4 U = (D x 4 / 27648) + 1
	5 V	27648	0x6C00	Nominal range	
	2.5 V	13824	0x3600		
	0 V	0	0x0000		
	-2.5 V	-13824	0xCA00		
	-5 V	-27648	0x9400		
	-5.25 V	-43200	0x5740	Underloading	
The following applies for all ranges: input value > overload range = 0x7FFF input value < underload range = 0x8000					

5.25 Analog Input Module EP-3264

Figure 173: Analog Input Module EP-3264

Figure 174: Connection Diagram EP-3264

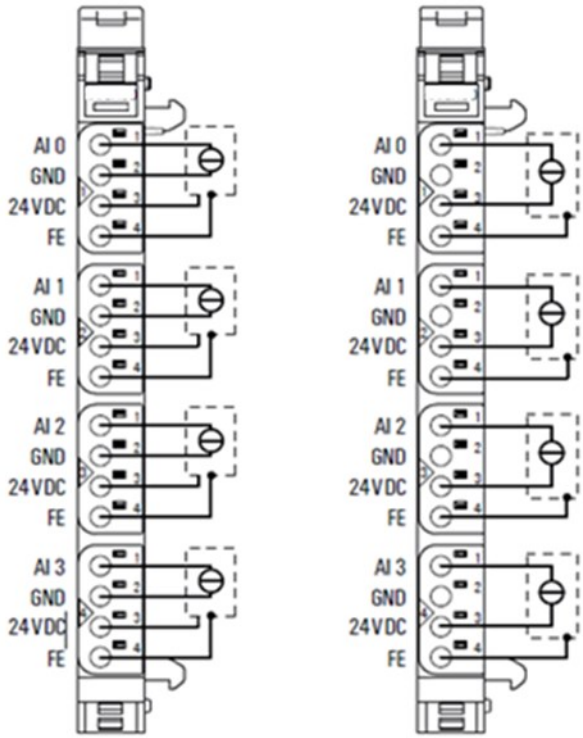

Left: 3-/4-wire sensor with sensor wiring via electronics

Right: 2-wire sensor with sensor wiring via electronics.

The EP-3264 analog input module can record up to 4 analog sensors with ±10 V, ±5 V, 0-10 V, 0-5 V, 2-10 V, 1-5V, 0-20 mA or 4-20 mA. The resolution is 16 bits per channel. Sensors can be connected to each connector in a 2-wire, 3-wire or 3-wire connection + FE. The measurement range is defined using parameterization. Two status LED are assigned to each channel. The module electronics supply the connected sensors with power from the input current path (IIN).

Each sensor output is loadable with 500 mA and protected against overcurrent. The inputs are protected against voltage surges and overcurrent. Voltages that exceed ±30 V may cause the destruction of the module. As a protection against overcurrent, the module temporarily switches to voltage mode.

The module provides individual channel diagnosis with channel related error messages.

5.25.1 LED Indicators EP-3264

	Module Status	**Green:** Communication over the system bus **Red**: Module System Fault or Diagnostic Fault
	1.1	**Red**: channel error
	1.2	--
	1.3	**Red:** +24 V short circuit or line break (with current < 1 mA)
	1.4	--
	2.1	**Red**: channel error
	2.2	--
	2.3	**Red:** +24 V short circuit or line break (with current < 1 mA)
	2.4	--
	3.1	**Red**: channel error
	3.2	--
	3.3	**Red**: +24 V short circuit or line break (with current < 1 mA)
	3.4	--
	4.1	**Red**: channel error
	4.2	--
	4.3	**Red**: +24 V short circuit or line break (with current < 1 mA)
	4.4	--

For error messages refer to Section 12, LED Indicators and Troubleshooting.

Figure 175: Block Diagram EP-3264

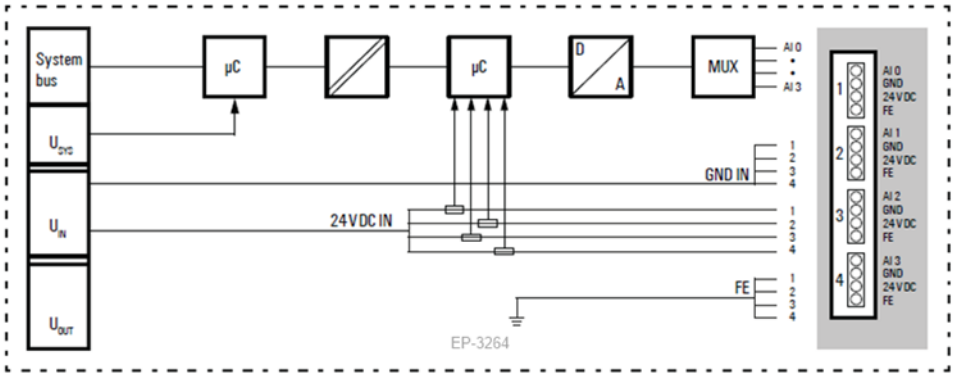

5.25.2 Specifications EP-3264

Specifications	Description	
System data		
Data	Process, parameter and diagnostic data depend on the network adapter used (refer to Section, Order and Arrangement of Modules).	
Interface	RSTi-EP I/O communication bus	
System bus transfer rate	48 Mbps	
Inputs		
Number	4	
Input values	1. Voltage (0 ... 5 V, ±5 V, 0 ... 10 V, ±10 V, 1 ... 5 V, 2 ... 10V) 2. Current (0 ... 20 mA, 4 ... 20 mA)	
Resolution	16 bits	
Accuracy	0.1 % max. 50 ppm/K max. max. –10 mV/A	at 25 °C (77 °F) Temperature coefficient additional inaccuracy in the voltage mode due to sensor power supply current
Sensor supply	max. 0.5 A per plug	
Sensor connection	2-wire, 3-wire, 3-wire + FE	
Conversion time	1ms	
Internal resistance	U: 100 kΩ; I: 41.2 Ω	
Reverse polarity protection	Yes	
Short-circuit-proof	Yes	
Response time of the protective circuit	< 50ms	
Module diagnosis	Yes	
Individual channel diagnosis	No	
Supply		
Supply voltage	20.4V – 28.8V	
Current consumption from system current path ISYS,	8 mA	
Current consumption from input current path IIN	25 mA + sensor supply current	
General data		
Weight	89 g (3.14 oz)	
For additional general data, refer to Section, General Technical Data for I/O Modules.		

5.25.3 Modifiable Parameters for EP-3164

Channel	Description	Options	Default
	Frequency suppression	disabled (0) / 50 Hz (1) / 60 Hz (2) / Average over 16 values (3)	disabled
0 ... 3	Channel diagnosis	disabled (0) / enabled (1)	disabled
0 ... 3	Diag short circuit 24V	disabled (0) / enabled (1)	disabled
0 ... 3	Diag line break 24V	disabled (0) / enabled (1)	disabled
0 ... 3	Measurement range	0 to 20 mA (0) / 4 to 20 mA (1) / 0 V to 10 V (2) / -10 to 10 V (3) / 0 to 5 V (4) / -5 to 5 V (5) / 1 to 5 V (6) / 2 to 10 V (7) / disabled (8)	disabled

5.25.4 Diagnostic Data EP-3264

Name	Bytes	Bit	Description	Default
Error indicator	0	0	Module error	
		1	Internal error	
		2	External error	
		3	Channel error	
		4	Error	
		5	Power supply fault	
		6	Reserved	0
		7	Parameter error	
Module type	1	0	Module Type	0x05
		1		
		2		
		3		
		4	Channel information available	1
		5	Reserved	0
		6	Reserved	0
		7	Reserved	0
Error byte 2	2	0-7	Reserved	0
Error byte 3	3	0-2	Reserved	0
		3	Internal diagnostic FIFO full	
		4	Power supply fault	
		5-7	Reserved	0
Channel type	4	0-6	Channel type	0x74
		7	Reserved	0
Diagnostic bits per channel	5		Number of diagnostic bit per channel	8

Name	Bytes	Bit	Description	Default
Number of channels	6		Number of similar channels per module	4
Channel error	7	0	Error at channel 0	
		1	Error at channel 1	
		2	Error at channel 2	
		3	Error at channel 3	
		4-7	Reserved	0
Channel error	8	8-15	Reserved	0
Channel error	9	16-23	Reserved	0
Channel error	10	24-31	Reserved	0

5.25.5 Diagnostic Data EP-3264

Name	Bytes	Bit	Description	Default
Channel 0 error	11	0	Parameter error	
		1	Overload	
		2	Line break sensor supply	
		3	Fuse blown	
		4	Line break signal	
		5	Reserved	0
		6	Lower limit exceeded	
		7	Upper limit exceeded	
Channel 1 error	12	0	Parameter Error	
		1	Overload	
		2	Line break sensor supply	
		3	Fuse blown	
		4	Line break signal	
		5	Reserved	0
		6	Lower limit exceeded	
		7	Upper limit exceeded	
Channel 2 error	13	0	Parameter Error	
		1	Overload	
		2	Line break sensor supply	
		3	Fuse blown	
		4	Line break signal	
		5	Reserved	0
		6	Lower limit exceeded	
		7	Upper limit exceeded	
Channel 2 error	14	0	Parameter Error	
		1	Overload	
		2	Line break sensor supply	
		3	Fuse blown	
		4	Line break signal	
		5	Reserved	0
		6	Lower limit exceeded	
		7	Upper limit exceeded	

Name	Bytes	Bit	Description	Default
Channel 4 error to Channel 31 error	15 - 42	0 - 7	Reserved	0
Time stamp	43-46		Time stamp [µs] (32-bit)	

5.25.6 Process Data† Inputs EP-3264

Byte	Format	Description	Remarks
IB0	Word	AI0	
IB1			
IB2	Word	AI1	
IB3			
IB4	Word	AI2	
IB5			
IB6	Word	AI3	
IB7			

† Internal process data mapping with data format "Standard". Depending on the fieldbus specification and the data format of the communicating fieldbus components the bytes and/or words can be reversed during data transfer

5.25.7 Measurement Range EP-3264

Measurement range	Current (I) / Voltage (U)	Decimal (D)	Hexadecimal	Range	Conversion
0 – 20 mA	21.67 mA	29957	0x7505	Overloading	D = 27648 x I / 20 I = D x 20 / 27648
	20 mA	27648	0x6C00	Nominal range	
	10 mA	13824	0x3600		
	0 mA	0	0x0000		
4 – 20 mA	21.67 mA	29957	0x7505	Overloading	D = 27648 x (I – 4) / 16 I=(D x 16 / 27648)+ 4
	20 mA	27648	0x6C00	Nominal range	
	12 mA	13824	0x3600		
	4 mA	0	0x0000		
	3.6 mA	-691	0XFD4D	Underloading	
0 – 10 V	10.5V	29030	0x7166	Overloading	D = 27648 x U/10 I = D x 10 / 27648
	10 V	27648	0x6C00	Nominal range	
	5 V	13824	0x3600		
	0 V	0	0x0000		
±10 V	+10.5V	29030	0x7166	Overloading	D = 27648 x U / 10 U = D x 10 / 27648
	10 V	27648	0x6C00	Nominal range	
	5 V	13824	0x3600		
	0 V	0	0x0000		
	-5 V	-13824	0xCA00		
	-10 V	-27648	0x9400		
	-10.5V	-29030	8E9A	Underloading	
2 - 10 V	+10.5V	29376	0x72C0	Overloading	D = 27648 x (U – 2) / 8 U = D x 8 / 27648 + 2
	10 V	27648	0x6C00	Nominal range	
	6 V	13824	0x3600		
	2 V	0	0x0000		

Measurement range	Current (I) / Voltage (U)	Decimal (D)	Hexadecimal	Range	Conversion
	1.8V	-691	0XFD4D	Underloading	
1 - 5 V	5.25V	29376	0x72C0	Overloading	D = 27648 x (U – 1) / 4 U = (D x 4 / 27648) + 1
	5 V	27648	0x6C00	Nominal range	
	3 V	13824	0x3600		
	1 V	0	0x0000		
	0.9 V	-691	0XFD4D	Underloading	
0 – 5 V	5.25 V	29030	0x7166	Overloading	D = 27648 x U/5 I = D x 5 / 27648
	5 V	27648	0x6C00	Nominal range	
	2.5 V	13824	0x3600		
	0 V	0	0x0000		
±5 V	5.25 V	29376	0x72C0	Overloading	D = 27648 x (U – 1) / 4 U = (D x 4 / 27648) + 1
	5 V	27648	0x6C00	Nominal range	
	2.5 V	13824	0x3600		
	0 V	0	0x0000		
	-2.5 V	-13824	0xCA00		
	-5 V	-27648	0x9400		
	-5.25 V	-43200	0x5740	Underloading	
The following applies for all ranges: input value > overload range = 0x7FFF input value < underload range = 0x8000					

5.26 Analog Input Module EP-3664

Figure 176: Analog Input Module EP-3664

Figure 177: Connection Diagram EP-3664

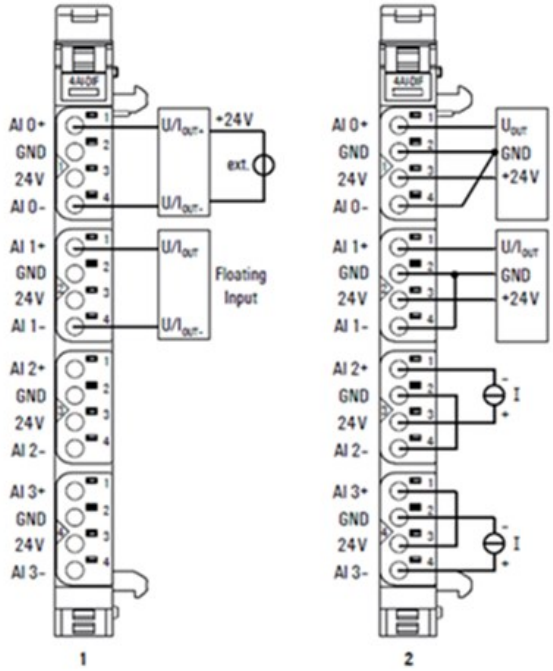

(Figure 178: For EP-3664, the 1= Standard, 2= Alternative option)

In the event that, you will realize the connection variant with an external sensor supply, pay attention to the common mode range: Ucommon = -30V ... +30V.

Figure 178: Definition of Common Mode (CM) EP-3664

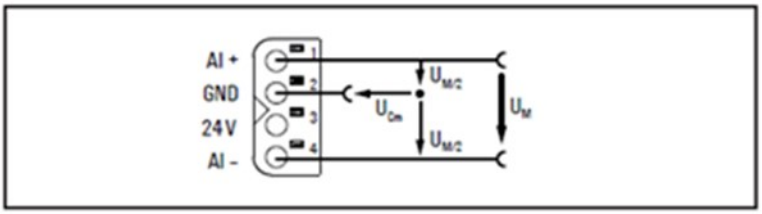

The EP-3664 analog input module can record up to 4 analog sensors with ±10 V, ±5 V, 0-10 V, 0-5 V, 2-10 V, 1-5 V, 0-20 mA or 4-20 mA. The resolution is 16 bits per channel. Sensors can be connected to each connector in a 2-wire, 3-wire or 4-wire connection. The measurement range is defined using parameterization. Two status LED are assigned to each channel. The module electronics supply the connected sensors with power from the input current path (IIN).

Each sensor output is loadable with 500 mA and protected against overcurrent. The inputs are protected against voltage surges and overcurrent. Voltages that exceed ±36 V against GND may cause the destruction of the module. As a protection against overcurrent, the module will cycle ON and OFF in high impedance mode.

The module provides individual channel diagnosis with channel related error messages.

5.26.1 LED Indicators EP-3664

	Module Status	**Green**: Communication over the system bus Red: Module System Fault or Diagnostic Fault (Collective error diagnostics)
	1.1	**Red**: Line break or range exceeded input 0
	1.2	--
	1.3	**Red**: Line break or short circuit in sensor supply
	1.4	--
	2.1	**Red**: Line break or range exceeded input 1
	2.2	--
	2.3	**Red**: Line break or short circuit in sensor supply
	2.4	--
	3.1	**Red**: Line break or range exceeded input 2
	3.2	--
	3.3	**Red**: Line break or short circuit in sensor supply
	3.4	--
	4.1	**Red**: Line break or range exceeded input 3
	4.2	--
	4.3	**Red**: Line break or short circuit in sensor supply
	4.4	--

For error messages refer to Section 12, LED Indicators and Troubleshooting.

Figure 179: Block Diagram EP-3664

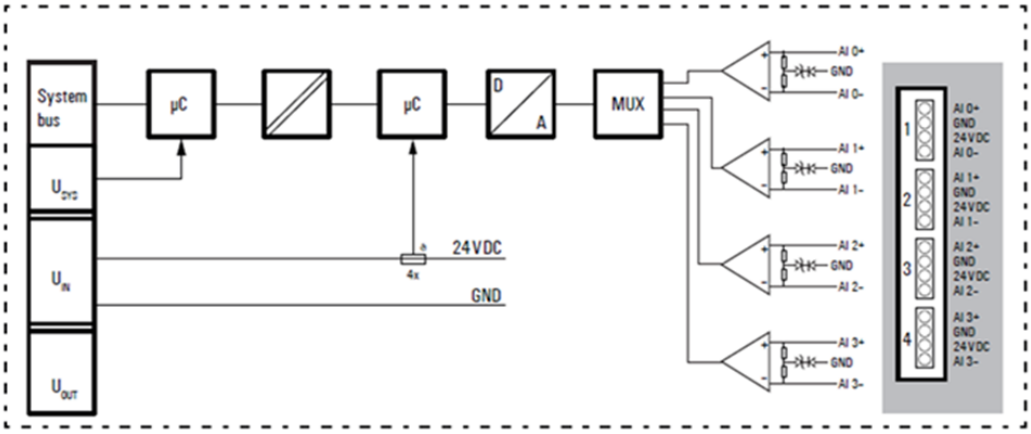

5.26.2 Specifications: EP-3664

Specifications	Description	
System data		
Data	Process, parameter and diagnostic data depend on the network adapter used (refer to Section, Order and Arrangement of Modules).	
Interface	RSTi-EP I/O communication bus	
System bus transfer rate	48 Mbps	
Inputs		
Number	4	
Input values	1. Voltage (0 ... 5 V, ±5 V, 0 ... 10 V, ±10 V, 1 ... 5 V, 2 ... 10 V) 2. Current (0 ... 20 mA, 4 ... 20 mA)	
Resolution	16 bits	
Accuracy	0.1 % max. 50 ppm/K max.	at 25 °C (77 °F) Temperature coefficient
Sensor supply	max. 0.5 A per plug	
Sensor connection	2-wire, 3-wire, 4-wire	
Conversion time	1ms	
Internal resistance	U: 89 kΩ; I: 16 Ω	
Reverse polarity protection	Yes	
Short-circuit-proof	Yes	
Module diagnosis	Yes	
Individual channel diagnosis	Yes	
Supply		
Supply voltage	20.4V – 28.8V	
Current consumption from system current path ISYS,	8 mA	
Current consumption from input current path IIN	31 mA + Load	
General data		
Weight	91 g (3.21 oz)	
For additional general data, refer to Section, General Technical Data for I/O Modules.		

5.26.3 Modifiable Parameters EP-3664

Channel	Description	Options	Default
	Frequency suppression	disabled (0) / 50 Hz (1) / 60 Hz (2) / Average over 16 values (3)	disabled
0 ... 3	Channel diagnosis	disabled (0) / enabled (1)	disabled
0 ... 3	Diag short circiut 24V	disabled (0) / enabled (1)	disabled
0 ... 3	Diag line break 24V	disabled (0) / enabled (1)	disabled
0 ... 3	Measurement range	0 to 20 mA (0) / 4 to 20 mA (1) / 0 V to 10 V (2) / -10 to 10 V (3) / 0 to 5 V (4) / -5 to 5 V (5) / 1 to 5 V (6) / 2 to 10 V (7) / disabled (8)	disabled

5.26.4 Diagnostic Data EP-3664

Name	Bytes	Bit	Description	Default
Error indicator	0	0	Module error	
		1	Internal error	
		2	External error	
		3	Channel error	
		4	Error	
		5	Power supply fault	
		6	Reserved	0
		7	Parameter error	
Module type	1	0	Module Type	0x05
		1		
		2		
		3		
		4	Channel information available	1
		5	Reserved	0
		6	Reserved	0
		7	Reserved	0
Error byte 2	2	0-7	Reserved	0
Error byte 3	3	0-2	Reserved	0
		3	Internal diagnostic FIFO full	
		4	Power supply fault	
		5-7	Reserved	0
Channel type	4	0-6	Channel type	0x74
		7	Reserved	0

Name	Bytes	Bit	Description	Default
Diagnostic bits per channel	5		Number of diagnostic bits per channel	8
Number of channels	6		Number of similar channels per module	4
Channel error	7	0	Error at channel 0	
		1	Error at channel 1	
		2	Error at channel 2	
		3	Error at channel 3	
		4-7	Reserved	0
Channel error	8	8-15	Reserved	0
Channel error	9	16-23	Reserved	0
Channel error	10	24-31	Reserved	0
Channel 0 error	11	0	Parameter error	
		1	Overload	
		2	Line break sensor supply	
		3	Fuse blown	
		4	Line break signal	
		5	Reserved	0
		6	Lower limit exceeded	
		7	Upper limit exceeded	
Channel 1 error	12	0	Parameter Error	
		1	Overload	
		2	Line break sensor supply	
		3	Fuse blown	
		4	Line break signal	
		5	Reserved	0
		6	Lower limit exceeded	
		7	Upper limit exceeded	
Channel 2 error	13	0	Parameter Error	
		1	Overload	
		2	Line break sensor supply	
		3	Fuse blown	
		4	Line break signal	
		5	Reserved	0
		6	Lower limit exceeded	
		7	Upper limit exceeded	
Channel 3 error	14	0	Parameter Error	
		1	Overload	
		2	Line break sensor supply	
		3	Fuse blown	
		4	Line break signal	
		5	Reserved	0
		6	Lower limit exceeded	
		7	Upper limit exceeded	
Channel 4 error to Channel 31 error	15 - 42	0 - 7	Reserved	0
Time stamp	43-46		Time stamp [µs] (32-bit)	

5.26.5 Process Data† Inputs EP-3664

Byte	Format	Description	Remarks
IB0	Word	AI0	
IB1			
IB2	Word	AI1	
IB3			
IB4	Word	AI2	
IB5			
IB6	Word	AI3	
IB7			
† Internal process data mapping with data format "Standard". Depending on the fieldbus specification and the data format of the communicating fieldbus components the bytes and/or words can be reversed during data transfer			

5.26.6 Measurement Range EP-3664

Measurement range	Current (I) / Voltage (U)	Decimal (D)	Hexadecimal	Range	Conversion
0 – 20 mA	21.67 mA	29957	0x7505	Overloading	D = 27648 x I / 20 I = D x 20 / 27648
	20 mA	27648	0x6C00	Nominal range	
	10 mA	13824	0x3600		
	0 mA	0	0x0000		
4 – 20 mA	21.67 mA	29957	0x7505	Overloading	D = 27648 x (I – 4) / 16 I=(D x 16 / 27648)+ 4
	20 mA	27648	0x6C00	Nominal range	
	12 mA	13824	0x3600		
	4 mA	0	0x0000		
	3.6 mA	-691	0XFD4D	Underloading	
0 – 10 V	10.5V	29030	0x7166	Overloading	D = 27648 x U/10 I = D x 10 / 27648
	10 V	27648	0x6C00	Nominal range	
	5 V	13824	0x3600		
	0 V	0	0x0000		
±10 V	+10.5V	29030	0x7166	Overloading	D = 27648 x U / 10 U = D x 10 / 27648
	10 V	27648	0x6C00	Nominal range	
	5 V	13824	0x3600		
	0 V	0	0x0000		
	-5 V	-13824	0xCA00		
	-10 V	-27648	0x9400		
	-10.5V	-29030	8E9A	Underloading	
2 - 10 V	+10.5V	29376	0x72C0	Overloading	D = 27648 x (U – 2) / 8 U = D x 8 / 27648 + 2
	10 V	27648	0x6C00	Nominal range	
	6 V	13824	0x3600		
	2 V	0	0x0000		
	1.8V	-691	0XFD4D	Underloading	
1 - 5 V	5.25V	29376	0x72C0	Overloading	D = 27648 x (U – 1) / 4 U = (D x 4 / 27648) + 1
	5 V	27648	0x6C00	Nominal range	
	3 V	13824	0x3600		
	1 V	0	0x0000		
	0.9 V	-691	0XFD4D	Underloading	

Measurement range	Current (I) / Voltage (U)	Decimal (D)	Hexadecimal	Range	Conversion
0 – 5 V	5.25 V	29030	0x7166	Overloading	D = 27648 x U/5 I = D x 5 / 27648
	5 V	27648	0x6C00	Nominal range	
	2.5 V	13824	0x3600		
	0 V	0	0x0000		
±5 V	5.25 V	29376	0x72C0	Overloading	D = 27648 x (U – 1) / 4 U = (D x 4 / 27648) + 1
	5 V	27648	0x6C00	Nominal range	
	2.5 V	13824	0x3600		
	0 V	0	0x0000		
	-2.5 V	-13824	0xCA00		
	-5 V	-27648	0x9400		
	-5.25 V	-43200	0x5740	Underloading	
The following applies for all ranges: input value > overload range = 0x7FFF input value < underload range = 0x8000					

5.27 Analog Input Module EP-3124

Figure 180: Analog Input Module EP-3124

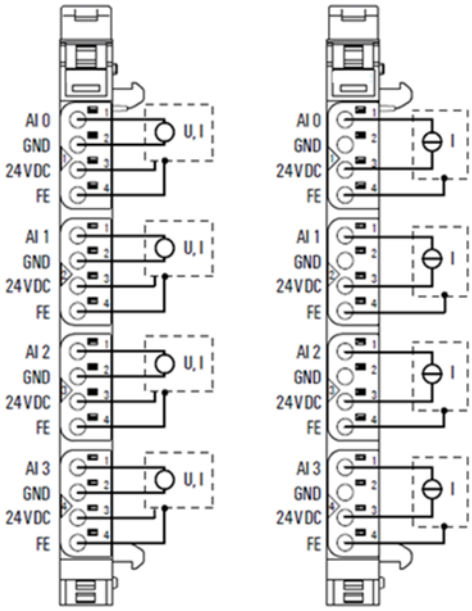

Figure 181: Connection Diagram EP-3124

left: 3-/4-wire sensor with sensor wiring via electronics.

right: 2-wire sensor with sensor wiring via electronics.

The analog input module EP-3124 can record up to 4 analog sensors with ±10 V, ±5 V, 0-10 V, 0-5 V, 2-10 V, 1-5 V, 0-20 mA or 4-20 mA. The resolution is 12 bits per channel. Sensors can be connected to each connector in a 2-wire, 3-wire or 3-wire connection + FE. The measurement range is defined using parameterization. A status LED is assigned to each channel. The module electronics supply the connected sensors with power from the input current path (IIN).

The inputs are protected against voltage surges and overcurrent. Voltages that exceed ±30 V may cause the destruction of the module. As a protection against overcurrent, the module temporarily switches to voltage mode.

5.27.1 LED Indicators EP-3124

	Module Status	**Green**: Communication over the system bus **Red**: Module System Fault or Diagnostic Fault
	1.1	**Red**: channel error
	1.2	--
	1.3	--
	1.4	--
	2.1	**Red**: channel error
	2.2	--
	2.3	--
	2.4	--
	3.1	**Red**: channel error
	3.2	--
	3.3	--
	3.4	--
	4.1	**Red**: channel error
	4.2	--
	4.3	--
	4.4	--

For error messages refer to Section 12, LED Indicators and Troubleshooting.

Figure 182: Block Diagram EP-3124

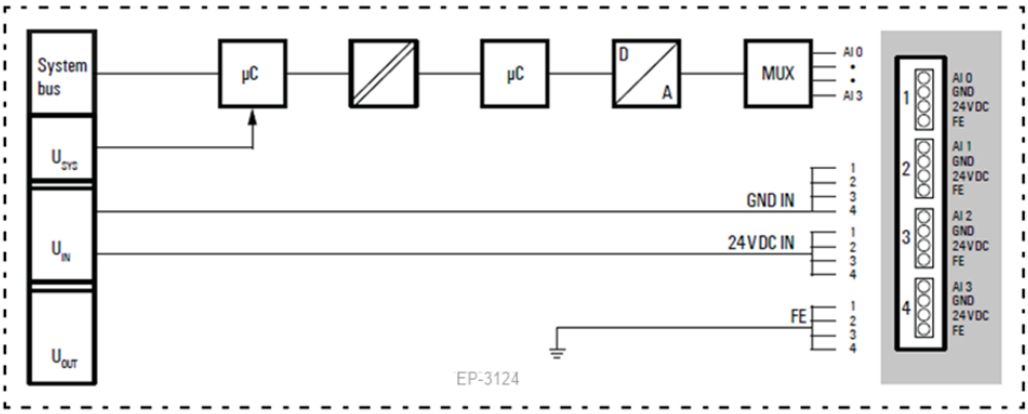

5.27.2 Specifications EP-3124

Specifications	Description	
System data		
Data	Process, parameter and diagnostic data depend on the network adapter used (refer to Section, Order and Arrangement of Modules).	
Interface	RSTi-EP I/O communication bus	
System bus transfer rate	48 Mbps	
Inputs		
Number	4	
Input values	1. Voltage (0 ... 5 V, ±5 V, 0 ... 10 V, ±10 V, 1 ... 5 V, 2 ... 10V) 2. Current (0 ... 20 mA, 4 ... 20 mA)	
Resolution	12 bits	
Accuracy	0.25 % max. 50 ppm/K max. max. –10 mV/A	at 25 °C (77 °F) Temperature coefficient additional inaccuracy in the voltage mode due to sensor power supply current
Sensor supply	max. 2 A per plug, total max. 8 A	
Sensor connection	2-wire, 3-wire, 3-wire + FE	
Conversion time	1ms	
Internal resistance	U: 100 kΩ; I: 41.2 Ω	
Reverse polarity protection	Yes	
Short-circuit-proof	Yes	
Response time of the protective circuit	< 50ms	
Module diagnosis	Yes	
Individual channel diagnosis	No	
Supply		
Supply voltage	20.4V – 28.8V	
Current consumption from system current path ISYS,	8 mA	
Current consumption from input current path IIN	25 mA + sensor supply current	
General data		
Weight	87 g (3.07 oz)	
For additional general data, refer to Section, General Technical Data for I/O Modules.		

5.27.3 Modifiable Parameters for EP-3124

Channel	Description	Options	Default
	Frequency suppression	disabled (0) / 50 Hz (1) / 60 Hz (2) / Average over 16 values (3)	disabled
0 ... 3	Measurement range	0 to 20 mA (0) / 4 to 20 mA (1) / 0 V to 10 V (2) / -10 to 10 V (3) / 0 to 5 V (4) / -5 to 5 V (5) / 1 to 5 V (6) / 2 to 10 V (7) / disabled (8)	disabled

5.27.4 Diagnostic Data EP-3124

Name	Bytes	Bit	Description	Default
Error indicator	0	0	Module error	
		1	Internal error	
		2	External error	
		3	Channel error	0
		4	Error	
		5	Reserved	0
		6	Reserved	0
		7	Parameter error	
Module type	1	0	Module Type	0x05
		1		
		2		
		3		
		4	Reserved	0
		5	Reserved	0
		6	Reserved	0
		7	Reserved	0
Error byte 2	2	0-7	Reserved	0
Error byte 3	3	0-2	Reserved	0
		3	Internal diagnostic FIFO full	
		4	Power supply fault	
		5	Reserved	0
		6	Reserved	0
		7	Reserved	0
Channel type	4	0-6	Channel type	0x74
		7	Reserved	0
Diagnostic bits per channel	5		Number of diagnostic bits per channel	0
Number of channels	6		Number of similar channels per module	4

Name	Bytes	Bit	Description	Default
Channel error	7-10	0-31	Reserved	0
Channel 0 error to Channel 31 error	11 to 42	0–7	Reserved	0
Time stamp	43-46		Time stamp [µs] (32-bit)	

5.27.5 Process Data† Inputs EP-3124

Byte	Format	Description	Remarks
IB0	Word	AI0	
IB1			
IB2	Word	AI1	
IB3			
IB4	Word	AI2	
IB5			
IB6	Word	AI3	
IB7			

† Internal process data mapping with data format “Standard”. Depending on the fieldbus specification and the data format of the communicating fieldbus components the bytes and/or words can be reversed during data transfer.

5.27.6 Measurement Range EP-3124

Measurement range	Current (I) / Voltage (U)	Decimal (D)	Hexadecimal	Range	Conversion
0 – 20 mA	21.67 mA	29957	0x7505	Overloading	D = 27648 x I / 20 I = D x 20 / 27648
	20 mA	27648	0x6C00	Nominal range	
	10 mA	13824	0x3600		
	0 mA	0	0x0000		
4 – 20 mA	21.67 mA	29957	0x7505	Overloading	D = 27648 x (I – 4) / 16 I=(D x 16 / 27648)+ 4
	20 mA	27648	0x6C00	Nominal range	
	12 mA	13824	0x3600		
	4 mA	0	0x0000		
	3.6 mA	-691	0XFD4D	Underloading	
0 – 10 V	10.5V	29030	0x7166	Overloading	D = 27648 x U/10 I = D x 10 / 27648
	10 V	27648	0x6C00	Nominal range	
	5 V	13824	0x3600		
	0 V	0	0x0000		
±10 V	+10.5V	29030	0x7166	Overloading	D = 27648 x U / 10 U = D x 10 / 27648
	10 V	27648	0x6C00	Nominal range	
	5 V	13824	0x3600		
	0 V	0	0x0000		
	-5 V	-13824	0xCA00		
	-10 V	-27648	0x9400		
	-10.5V	-29030	8E9A	Underloading	
2 - 10 V	+10.5V	29376	0x72C0	Overloading	D = 27648 x (U – 2) / 8 U = D x 8 / 27648 + 2
	10 V	27648	0x6C00	Nominal range	
	6 V	13824	0x3600		

Measurement range	Current (I) / Voltage (U)	Decimal (D)	Hexadecimal	Range	Conversion
	2 V	0	0x0000		
	1.8V	-691	0XFD4D	Underloading	
1 - 5 V	5.25V	29376	0x72C0	Overloading	D = 27648 x (U – 1) / 4 U = (D x 4 / 27648) + 1
	5 V	27648	0x6C00	Nominal range	
	3 V	13824	0x3600		
	1 V	0	0x0000		
	0.9 V	-691	0XFD4D	Underloading	

5.27.7 Measurement Range EP-3124

Measurement Range	Current (I) / Voltage (U)	Decimal (D)	Hexadecimal	Range	Conversion
0 – 5 V	5.25 V	29030	0x7166	Overloading	D = 27648 x U/5 I = D x 5 / 27648
	5 V	27648	0x6C00	Nominal range	
	2.5 V	13824	0x3600		
	0 V	0	0x0000		
±5 V	5.25 V	29376	0x72C0	Overloading	D = 27648 x (U – 1) / 4 U = (D x 4 / 27648) + 1
	5 V	27648	0x6C00	Nominal range	
	2.5 V	13824	0x3600		
	0 V	0	0x0000		
	-2.5 V	-13824	0xCA00		
	-5 V	-27648	0x9400		
	-5.25 V	-43200	0x5740	Underloading	
The following applies for all ranges: input value > overload range = 0x7FFF input value < underload range = 0x8000					

5.28 Analog Input Module EP-3368

Figure 183: Analog Input Module EP-3368

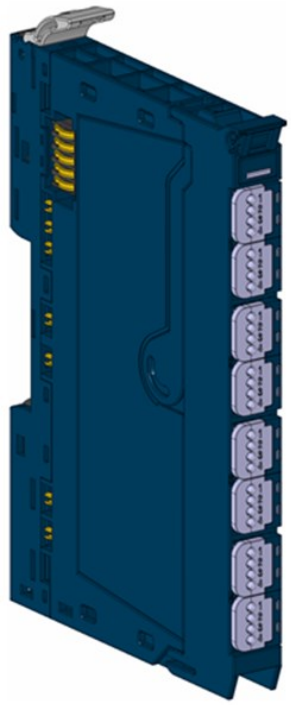

Figure 184: Connection Diagram EP-3368

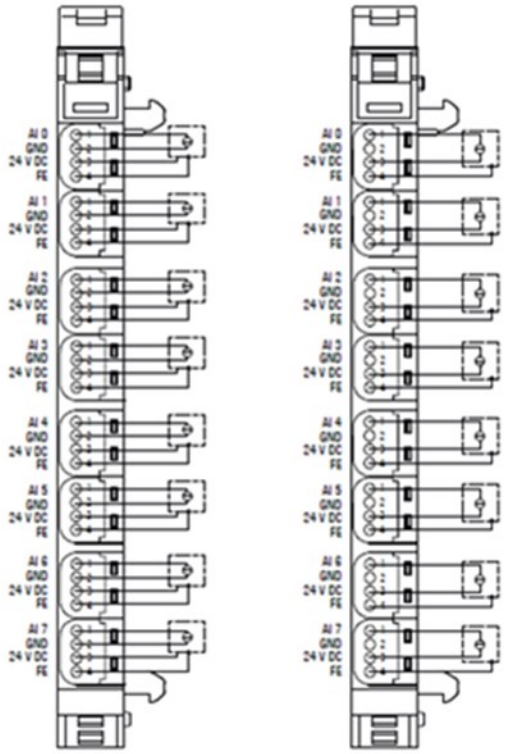

The analog input module EP-3368 can detect up to 8 analog sensors with 0-20 mA or 4-20 mA. The resolution is 16 bits per channel. Sensors can be connected to each connector in a 2-wire, 3-wire or 3-wire connection + FE (IDC). The measurement range is defined using parameterization. A status LED is assigned to each channel. The module electronics supply the connected sensors with power from the input current path (IIN).

The inputs are protected against voltage surges and overcurrent. Voltages that exceed ±30 V may cause the destruction of the module. The inputs are protected against overcurrent by a self-resetting fuse.

Note: The high density plugs EP-8360 for EP-3368 needs to be ordered separately, as the EP-3368 is not shipped with the HD plug unit.

5.28.1 LED Indicators EP-3368

Module Status	**Green**: Communication over the system bus **Red**: Module System Fault or Diagnostic Fault
1.1	**Red**: channel error
2.1	**Red**: channel error
3.1	**Red**: channel error
4.1	**Red**: channel error
5.1	**Red**: channel error
6.1	**Red**: channel error
7.1	**Red**: channel error
8.1	**Red**: channel error

For error messages refer to Section 12, LED Indicators and Troubleshooting.

Figure 185: Block Diagram EP-3368

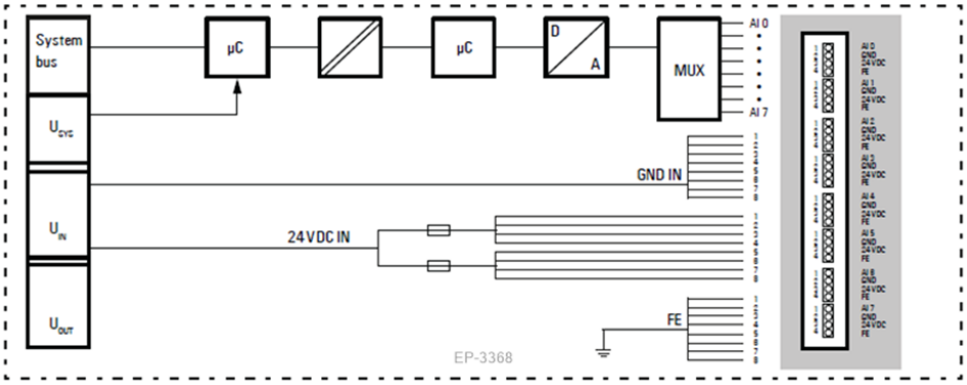

5.28.2 Specifications EP-3368

Specifications	Description	
System data		
Data	Process, parameter and diagnostic data depend on the network adapter used (refer to Section, Order and Arrangement of Modules).	
Interface	RSTi-EP I/O communication bus	
System bus transfer rate	48 Mbps	
Inputs		
Number	8	
Input values	Current input (0 - 20 mA, 4 - 20 mA)	
Resolution	16 bits	
Accuracy	max. 0.1 % FSR ±50 ppm/K max.	at 25 °C (77 °F) Temperature coefficient
Sensor supply	max. 125 mA per channel; channel 0 - 3 and 4 - 7 respectively are fused in combination	
Sensor connection	2-wire, 3-wire, 3-wire + FE	
Conversion time	1ms	
Internal resistance	approx. 45 Ω	
Reverse polarity protection	Yes	
Short-circuit-proof	Yes	
Response time of the protective circuit	< 0.1 s with short-circuit to +24 V	
Reset time	Temperature-dependent: < 30 s at 20°C (-4 °F)	
Module diagnosis	Yes	
Individual channel diagnosis	No	
Supply		
Supply voltage	20.4V – 28.8V	
Current consumption from system current path ISYS,	8 mA	
Current consumption from input current path IIN	20 mA + load	
Connection data		
Type of connection	Insulation Displacement Connection (IDC)	
Line connection cross-section	Single-wired, Fine-wired	0.14 - 0.35 mm2 (26 – 22 gauge)
General data		
Weight	90 g (3.17 oz)	
For additional general data, refer to Section, General Technical Data for I/O Modules.		

5.28.3 Modifiable Parameters for EP-3368

Channel	Description	Options	Default
	Frequency suppression	disabled (0) / 50 Hz (1) / 60 Hz (2) / Average over 16 values (3)	disabled
0 - 7	Measurement range	0 to 20 mA (0) / 4 to 20 mA (1) / disabled (3)	disabled

5.28.4 Diagnostic Data EP-3368

Name	Bytes	Bit	Description	Default
Error indicator	0	0	Module error	
		1	Internal error	
		2	External error	
		3	Channel error	0
		4	Error	
		5	Reserved	0
		6	Reserved	0
		7	Parameter error	
Module type	1	0	Module Type	0x05
		1		
		2		
		3		
		4	Reserved	0
		5	Reserved	0
		6	Reserved	0
		7	Reserved	0
Error byte 2	2	0-7	Reserved	0
Error byte 3	3	0-2	Reserved	0
		3	Internal diagnostic FIFO full	0
		4	Power supply fault	0
		5	Reserved	0
		6	Reserved	0
		7	Reserved	0
Channel type	4	0-6	Channel type	0x74
		7	Reserved	0
Diagnostic bits per channel	5		Number of diagnostic bit per channel	0
Number of channels	6		Number of similar channels per module	8
Channel error	7-10	0-31	Reserved	0
Channel 0 error to Channel 31 error	11 to 42	0–7	Reserved	0
Time stamp	43-46		Time stamp [µs] (32-bit)	

5.28.5 Process Data† Inputs EP-3368

Byte	Format	Description	Remarks
IB0	Word	AI0	
IB1			
IB2	Word	AI1	
IB3			
IB4	Word	AI2	
IB5			
IB6	Word	AI3	
IB7			
IB8	Word	AI4	
IB9			
IB10	Word	AI5	
IB11			
IB12	Word	AI6	
IB13			
IB14	Word	AI7	
IB15			
† Internal process data mapping with data format Standard. Depending on the fieldbus specification and the data format of the communicating fieldbus components the bytes and/or words can be reversed during data transfer.			

5.28.6 Measurement Range EP-3368

Measurement range	Current (I) / Voltage (U)	Decimal (D)	Hexadecimal	Range	Conversion
0 – 20 mA	21.67 mA	29957	0x7505	Overloading	D = 27648 x I / 20 I = D x 20 / 27648
	20 mA	27648	0x6C00	Nominal range	
	10 mA	13824	0x3600		
	0 mA	0	0x0000		
4 – 20 mA	21.67 mA	29957	0x7505	Overloading	D = 27648 x (I – 4) / 16 I=(D x 16 / 27648)+ 4
	20 mA	27648	0x6C00	Nominal range	
	12 mA	13824	0x3600		
	4 mA	0	0x0000		
	3.6 mA	-691	0XFD4D	Underloading	
The following applies for all ranges: input value > overload range = 0x7FFF input value < underload range = 0x8000					

5.29 Analog Input Module EP-3468

Figure 186: Analog Input Module EP-3468

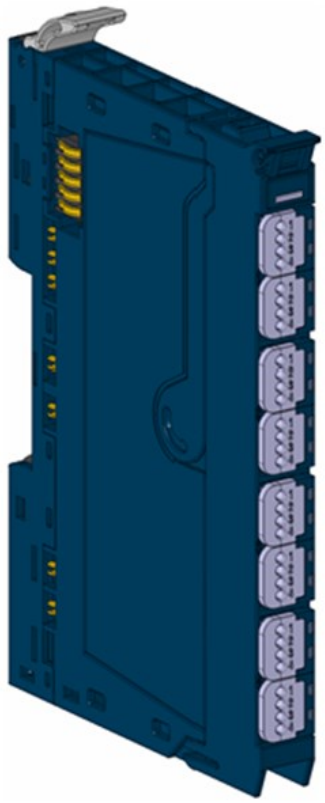

Figure 187: Connection Diagram EP-3468

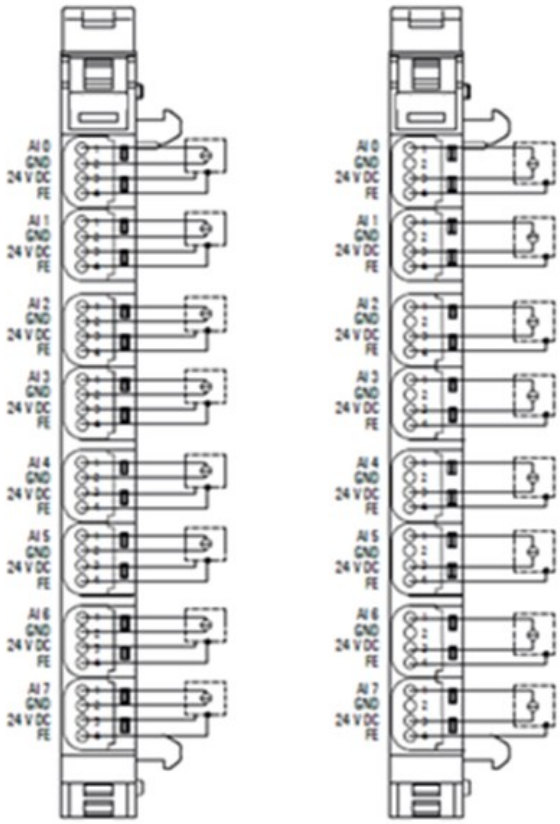

-

The analog input module EP-3468 can detect up to 8 analog sensors with 0 20 mA or 4-20 mA. The resolution is 16 bits per channel. Sensors can be connected to each connector in a

2-wire, 3-wire or 3-wire connection + FE (IDC). The measurement range is defined using parameterization. A status LED is assigned to each channel. The module electronics supply the connected sensors with power from the input current path (IIN).

The inputs are protected against voltage surges and overcurrent. Voltages that exceed ±30 V may cause the destruction of the module. The inputs are protected against overcurrent by a self-resetting fuse.

The module provides individual channel diagnosis with channel related error messages.

Note: The high density plugs EP-8360 for EP-3468 needs to be ordered separately, as the EP-3468 is not shipped with the HD plug unit.

5.29.1 LED Indicators EP-3468

Module Status	**Green**: Communication over the system bus **Red**: Module System Fault or Diagnostic Fault
1.1	**Red**: channel error
2.1	**Red**: channel error
3.1	**Red**: channel error
4.1	**Red**: channel error
5.1	**Red**: channel error
6.1	**Red**: channel error
7.1	**Red**: channel error
8.1	**Red**: channel error

For error messages refer to Section 12, LED Indicators and Troubleshooting.

Figure 188: Block Diagram EP-3468

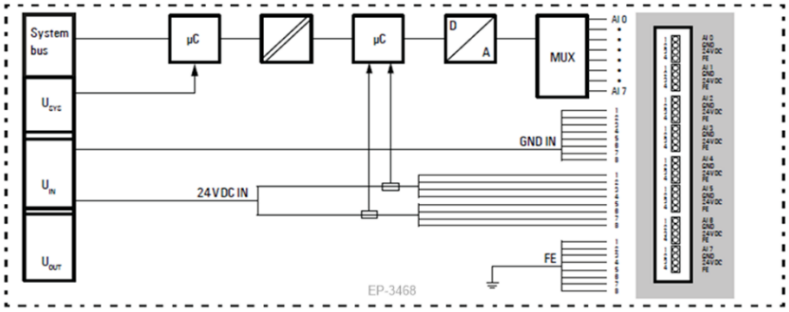

5.29.2 Specifications EP-3468

Specification	Description	
System data		
Data	Process, parameter and diagnostic data depend on the network adapter used (refer to Section, Order and Arrangement of Modules).	
Interface	RSTi-EP I/O communication bus	
System bus transfer rate	48 Mbps	
Inputs		
Number	8	
Input values	Current input (0 - 20 mA, 4 - 20 mA)	
Resolution	16 bits	
Accuracy	max. 0.1 % FSR ±50 ppm/K max.	at 25 °C (77 °F) Temperature coefficient
Sensor supply	max. 125 mA per channel; channel 0 - 3 and 4 - 7 respectively are fused in combination	
Sensor connection	2-wire, 3-wire, 3-wire + FE	
Conversion time	1ms	
Internal resistance	approx. 45 Ω	
Reverse polarity protection	Yes	
Short-circuit-proof	Yes	
Response time of the protective circuit	< 0.1 s with short-circuit to +24 V	
Reset time	Temperature-dependent: < 30 s at 20°C (-4 °F)	
Module diagnosis	Yes	
Individual channel diagnosis	No	
Supply		
Supply voltage	20.4V – 28.8V	
Current consumption from system current path ISYS,	8 mA	
Current consumption from input current path IIN	20 mA + load	
Connection data		
Type of connection	Insulation Displacement Connection (IDC)	
Line connection cross-section	Single-wired, Fine-wired	0.14 - 0.35 mm2 (26 – 22 gauge)
General data		
Weight	90 g (3.17 oz)	
For additional general data, refer to Section, General Technical Data for I/O Modules.		

5.29.3 Modifiable Parameters for EP-3468

Channel	Description	Options	Default
	Frequency suppression	disabled (0) / 50 Hz (1) / 60 Hz (2) / Average over 16 values (3)	disabled
0 - 7	Channel diagnostics	disabled (0) / enabled (1)	disabled
0 - 7	Diag short circuit 24 V	disabled (0) / enabled (1)	disabled
0 - 7	Measurement range	0 to 20 mA (0) / 4 to 20 mA (1) / disabled (3)	disabled

5.29.4 Process Data† Inputs EP-3468

Byte	Format	Description	Remarks
IB0	Word	AI0	
IB1			
IB2	Word	AI1	
IB3			
IB4	Word	AI2	
IB5			
IB6	Word	AI3	
IB7			
IB8	Word	AI4	
IB9			
IB10	Word	AI5	
IB11			
IB12	Word	AI6	
IB13			
IB14	Word	AI7	
IB15			

† Internal process data mapping with data format Standard. Depending on the fieldbus specification and the data format of the communicating fieldbus components the bytes and/or words can be reversed during data transfer.

5.29.5 Diagnostic Data EP-3468

Name	Bytes	Bit	Description	Default
Error indicator	0	0	Module error	
		1	Internal error	
		2	External error	
		3	Channel error	0
		4	Error	
		5	Reserved	0
		6	Reserved	0
		7	Parameter error	
Module type	1	0	Module Type	0x05
		1		
		2		
		3		
		4	Channel information available	1
		5	Reserved	0
		6	Reserved	0
		7	Reserved	0
Error byte 2	2	0-7	Reserved	0
Error byte 3	3	0-2	Reserved	0
		3	Internal diagnostic FIFO full	
		4	Power supply fault	
		5	Reserved	0
		6	Reserved	0
		7	Reserved	0
Channel type	4	0-6	Channel type	0x74
		7	Reserved	0
Diagnostic bits per channel	5		Number of diagnostic bit per channel	8
Number of channels	6		Number of similar channels per module	8
Channel error	7	0	Error at channel 0	0
			Error at channel 1	0
			Error at channel 2	0
			Error at channel 3	0
			Error at channel 4	0
			Error at channel 5	0
			Error at channel 6	0
			Error at channel 7	0
			Reserved	0
Channel 0 error to Channel 7 error	0	0	Parameter Error	0
		1	Overload	0
		2	Reserved	0
		3	Fuse blown	0
		4	Line break	0
		5	Reserved	0
		6	Lower limit exceeded	0
		7	Upper limit exceeded	0

Name	Bytes	Bit	Description	Default
Channel 8 error to Channel 31 error	19 - 42	0 - 7	Reserved	0
Time stamp	43-46		Time stamp [µs] (32-bit)	

5.29.6 Measurement Range EP-3468

Measurement range	Current (I) / Voltage (U)	Decimal (D)	Hexadecimal	Range	Conversion
0 – 20 mA	21.67 mA	29957	0x7505	Overloading	D = 27648 x I / 20 I = D x 20 / 27648
	20 mA	27648	0x6C00	Nominal range	
	10 mA	13824	0x3600		
	0 mA	0	0x0000		
4 – 20 mA	21.67 mA	29957	0x7505	Overloading	D = 27648 x (I – 4) / 16 I=(D x 16 / 27648)+ 4
	20 mA	27648	0x6C00	Nominal range	
	12 mA	13824	0x3600		
	4 mA	0	0x0000		
	3.6 mA	-691	0XFD4D	Underloading	
The following applies for all ranges: input value > overload range = 0x7FFF input value < underload range = 0x8000					

5.30 Analog Output Module EP-4164

Figure 189: Analog Output Module EP-4164

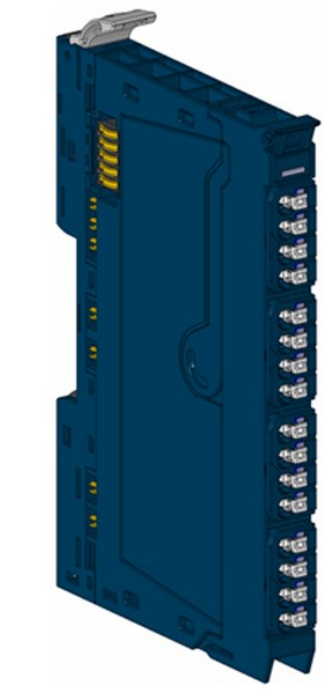

Figure 190: Connection Diagram EP-4164

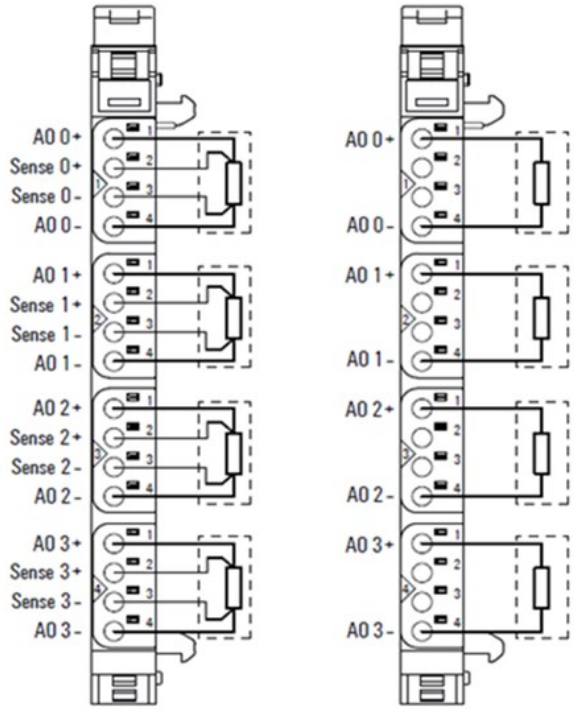

The analog output module EP-4164 can control up to four analog actuators with ±10V, ±5V, 0-10V, 0-5V, 2-10V, 1-5 V, 0-20 mA or 4-20 mA. The resolution is 16 bits per channel. An output can be connected to each connector, the internal switching is carried out automatically. The output range is defined using parameterization. A status LED is assigned to each channel. The outputs are supplied with power from the output current path (IOUT).

⚠CAUTION

The outputs as well as the sense-lines of the AO modules must not be used as power outputs.

5.30.1 LED Indicators EP-4164

	Module Status	**Green**: Communication over the system bus **Red: Module** System Fault or Diagnostic Fault
	1.1	**Red**: Channel 0 at voltage output: overload short-circuit, at current output: shunt resistance too high or line break detected
	2.1	**Red**: Channel 1 at voltage output: overload short-circuit, at current output: shunt resistance too high or line break detected
	3.1	**Red**: Channel 2 at voltage output: overload short-circuit, at current output: shunt resistance too high or line break detected
	4.1	**Red:** Channel 3 at voltage output: overload short-circuit, at current output: shunt resistance too high or line break detected

For error messages refer to Section 12, LED Indicators and Troubleshooting.

Figure 191: Block Diagram EP-4164

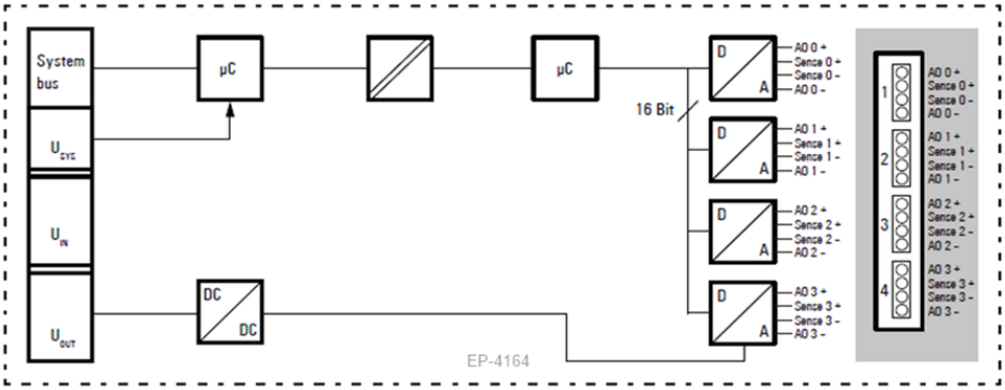

5.30.2 Specifications EP-4164

Specifications	Description
System data	
Data	Process, parameter and diagnostic data depend on the network adapter used (refer to Section, Order and Arrangement of Modules).
Interface	RSTi-EP I/O communication bus
System bus transfer rate	48 Mbps
Outputs	
Number	4
Output levels	1. Voltage (0 – 5 V, ±5 V, 0 – 10 V, ±10 V, 1 – 5 V, 2 – 10 V) 2. Current (0 – 20 mA, 4 – 20 mA)
Response time	1ms for 4 channels
Resolution	16 bits
Accuracy	0.1 % FSR max., 0.05 % FSR typ.
Temperature coefficient	20 ppm voltage / 31 ppm current measurement / K
Max. error between Tmin and Tmax	±220 ppm FSR
Monotony	Yes
Crosstalk between the channels	±0.001 % FSR max.
Repeat accuracy	< ±1 mV eff.
Output ripple	max. 0.001 %
Voltage load resistance	≥ 1 kΩ (at > 50°C (122 °F) max ambient temperature, total sensor current of 10 mA per channel but 25 mA per module)
Current load resistance	≤ 600 Ω
Actuator connection	2-wire (current and voltage; automatic detection), 4-wire (voltage)
Short-circuit-proof	Yes
Module diagnosis	Yes
Individual channel diagnosis	No
Substitute value	Yes
Supply	
Supply voltage	20.4V – 28.8V
Current consumption from system current path ISYS,	8 mA
Current consumption from output current path IOUT	85 mA
General data	
Weight	83 g (2.93 oz)
For additional general data, refer to Section, General Technical Data for I/O Modules	

5.30.3 Modifiable Parameters for EP-4164

Channel	Description	Options	Default
0 - 3	Output range	0 to 20 mA (0) / 4 to 20 mA (1) / 0 V to 10 V (2) / -10 to 10 V (3) / 0 to 5 V (4) / -5 to 5 V (5) / 1 to 5 V (6) / 2 to 10 V (7) / disabled (8)	disabled
0 - 3	Substitute value	Depending on the channels data format (S5/S7	0

5.30.4 Diagnostic Data EP-4164

Name	Bytes	Bit	Description	Default
Error indicator	0	0	Module error	
		1	Internal error	
		2	External error	
		3	Channel error	0
		4	Error	
		5	Reserved	0
		6	Reserved	0
		7	Parameter error	
Module type	1	0	Module Type	0x05
		1		
		2		
		3		
		4	Reserved	0
		5	Reserved	0
		6	Reserved	0
		7	Reserved	0
Error byte 2	2	0-7	Reserved	0
Error byte 3	3	0-2	Reserved	0
		3	Internal diagnostic FIFO full	
		4	Power supply fault	
		5	Reserved	0
		6	Reserved	0
		7	Reserved	0
Channel type	4	0-6	Channel type	0x73
		7	Reserved	0
Diagnostic bits per channel	5		Number of diagnostic bit per channel	0
Number of channels	6		Number of similar channels per module	4
Channel error	7-10	0-31	Reserved	0

Name	Bytes	Bit	Description	Default
Channel 0 error to Channel 31 error	11 to 42	0–7	Reserved	0
Time stamp	43-46		Time stamp [µs] (32-bit)	

5.30.5 Process Data† Outputs EP-4164

Byte	Format	Description	Remarks
QB0	Word	AO0	
QB1			
QB2	Word	AO1	
QB3			
QB4	Word	AO2	
QB5			
QB6	Word	AO3	
QB7			

† Internal process data mapping with data format “Standard”. Depending on the fieldbus specification and the data format of the communicating fieldbus components the bytes and/or words can be reversed during data transfer.

5.30.6 Value Range† EP-4164

Measurement range	Current (I) / Voltage (U)	Decimal (D)	Hexadecimal	Range	Conversion
0 – 20 mA	21.67 mA	29957	0x7505	Overloading	D = 27648 x I / 20 I = D x 20 / 27648
	20 mA	27648	0x6C00	Nominal range	
	10 mA	13824	0x3600		
	0 mA	0	0x0000		
4 – 20 mA	21.67 mA	29957	0x7505	Overloading	D = 27648 x (I – 4) / 16 I=(D x 16 / 27648)+ 4
	20 mA	27648	0x6C00	Nominal range	
	12 mA	13824	0x3600		
	4 mA	0	0x0000		
	3.6 mA	-691	0XFD4D	Underloading	
0 – 10 V	10.5V	29030	0x7166	Overloading	D = 27648 x U/10 I = D x 10 / 27648
	10 V	27648	0x6C00	Nominal range	
	5 V	13824	0x3600		
	0 V	0	0x0000		
±10 V	+10.5V	29030	0x7166	Overloading	D = 27648 x U / 10 U = D x 10 / 27648
	10 V	27648	0x6C00	Nominal range	
	5 V	13824	0x3600		
	0 V	0	0x0000		
	-5 V	-13824	0xCA00		
	-10 V	-27648	0x9400		
	-10.5V	-29030	8E9A	Underloading	
2 - 10 V	+10.5V	29376	0x72C0	Overloading	D = 27648 x (U – 2) / 8 U = D x 8 / 27648 + 2
	10 V	27648	0x6C00	Nominal range	
	6 V	13824	0x3600		
	2 V	0	0x0000		
	1.8V	-691	0XFD4D	Underloading	

Measurement range	Current (I) / Voltage (U)	Decimal (D)	Hexadecimal	Range	Conversion
1 - 5 V	5.25V	29376	0x72C0	Overloading	D = 27648 x (U – 1) / 4 U = (D x 4 / 27648) + 1
	5 V	27648	0x6C00	Nominal range	
	3 V	13824	0x3600		
	1 V	0	0x0000		
	0.9 V	-691	0XFD4D	Underloading	
0 – 5 V	5.25 V	29030	0x7166	Overloading	D = 27648 x U/5 I = D x 5 / 27648
	5 V	27648	0x6C00	Nominal range	
	2.5 V	13824	0x3600		
	0 V	0	0x0000		
±5 V	5.25 V	29376	0x72C0	Overloading	D = 27648 x (U – 1) / 4 U = (D x 4 / 27648) + 1
	5 V	27648	0x6C00	Nominal range	
	2.5 V	13824	0x3600		
	0 V	0	0x0000		
	-2.5 V	-13824	0xCA00		
	-5 V	-27648	0x9400		
	-5.25 V	-43200	0x5740	Underloading	

† If the process value is beyond the valid value range, the corresponding channel releases 0 V and 0 mA respectively
The following applies for all ranges:
input value > overload range = 0x7FFF
input value < underload range = 0x8000

5.31 Analog Output Module EP-4264

Figure 192: Analog Output Module EP-4264

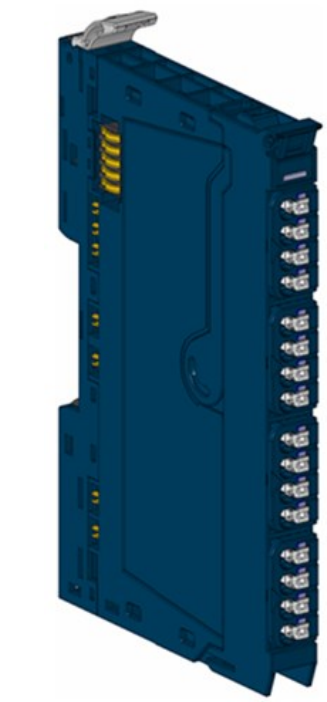

Figure 193: Connection Diagram EP-4264

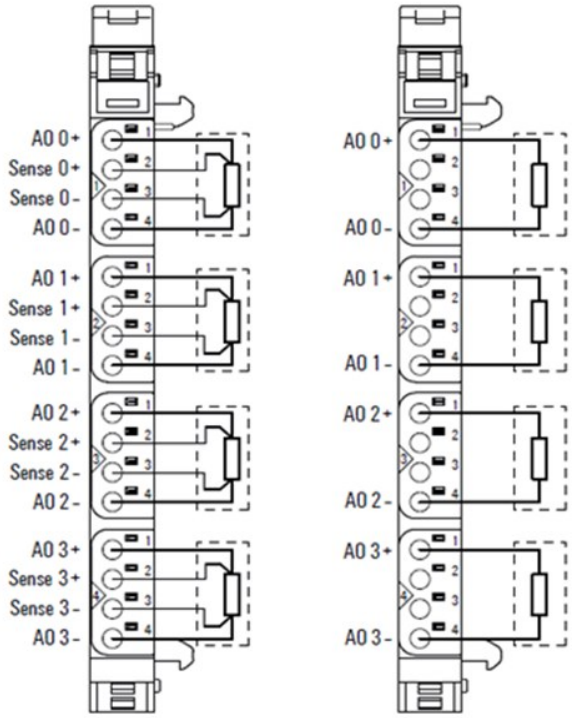

The analog output module EP-4264 can control up to four analog actuators with ±10 V, ±5 V, 0-10 V, 0-5 V, 2-10 V, 1-5 V, 0-20 mA or 4-20 mA. The resolution is 16 bits per channel. An output can be connected to each connector, the internal switching is carried out automatically. The output range is defined using parameterization. A status LED is assigned to each channel. The outputs are supplied with power from the output current path (IOUT).

The module provides individual channel diagnosis with channel related error messages.

⚠CAUTION

The outputs as well as the sense-lines of the AO modules must not be used as power outputs.

5.31.1 LED Indicators EP-4264

	Module Status	**Green**: Communication over the system bus **Red**: Module System Fault or Diagnostic Fault
	1.1	**Red**: Channel 0 at voltage output: overload short-circuit, at current output: shunt resistance too high or line break detected
	2.1	**Red**: Channel 1 at voltage output: overload short-circuit, at current output: shunt resistance too high or line break detected
	3.1	**Red**: Channel 2 at voltage output: overload short-circuit, at current output: shunt resistance too high or line break detected
	4.1	**Red:** Channel 3 at voltage output: overload short-circuit, at current output: shunt resistance too high or line break detected

For error messages refer to Section 12, LED Indicators and Troubleshooting.

Figure 194: Block Diagram EP-4264

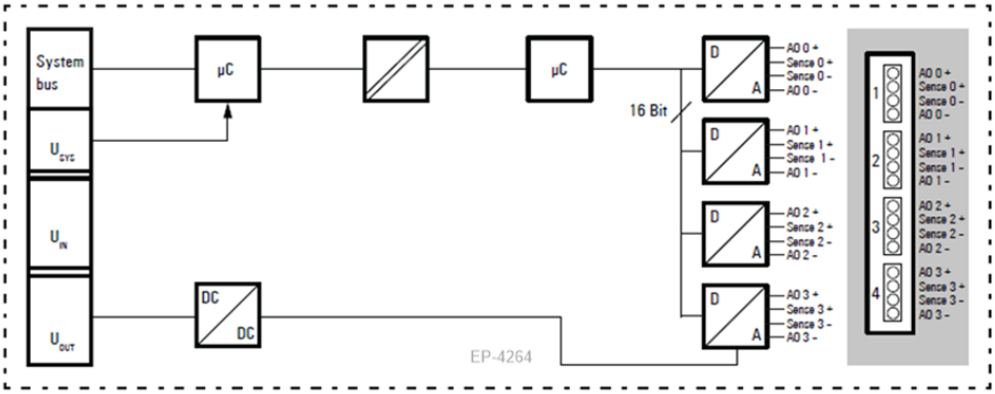

5.31.2 Specifications EP-4264

Specifications	Description
System data	
Data	Process, parameter and diagnostic data depend on the network adapter used (refer to Section, Order and Arrangement of Modules).
Interface	RSTi-EP I/O communication bus
System bus transfer rate	48 Mbps
Outputs	
Number	4
Output levels	1. Voltage (0 – 5 V, ±5 V, 0 – 10 V, ±10 V, 1 – 5 V, 2 – 10 V) 2. Current (0 – 20 mA, 4 – 20 mA)
Response time	1ms for 4 channels
Resolution	16 bits
Accuracy	0.1 % FSR max., 0.05 % FSR typ.
Temperature coefficient	20 ppm voltage / 31 ppm current measurement / K
Max. error between Tmin and Tmax	±220 ppm FSR
Monotony	Yes
Crosstalk between the channels	±0.001 % FSR max.
Repeat accuracy	< ±1 mV eff.
Output ripple	max. 0.001 %
Voltage load resistance	≥ 1 kΩ (at > 50°C (122 °F) max ambient temperature, total sensor current of 10 mA per channel but 25 mA per module)
Current load resistance	≤ 600 Ω
Actuator connection	2-wire (current and voltage; automatic detection), 4-wire (voltage)
Short-circuit-proof	Yes
Module diagnosis	Yes
Individual channel diagnosis	Yes
Substitute value	Yes
Supply	
Supply voltage	20.4V – 28.8V
Current consumption from system current path ISYS,	8 mA
Current consumption from output current path IOUT	85 mA
General data	
Weight	98 g (3.47 oz)
For additional general data, refer to Section, General Technical Data for I/O Modules.	

5.31.3 Modifiable Parameters for EP-4264

Channel	Description	Options	Default
0 - 3	Output range	0 to 20 mA (0) / 4 to 20 mA (1) / 0 V to 10 V (2) / -10 to 10 V (3) / 0 to 5 V (4) / -5 to 5 V (5) / 1 to 5 V (6) / 2 to 10 V (7) / disabled (8)	disabled
0 - 3	Substitute value	Depending on the channels data format (S5/S7)	0
0 - 3	Channel diagnosis	disabled (0) / enabled (1)	disabled

5.31.4 Diagnostic Data EP-4264

Name	Bytes	Bit	Description	Default
Error indicator	0	0	Module error	
		1	Internal error	
		2	External error	
		3	Channel error	0
		4	Error	
		5	Reserved	0
		6	Reserved	0
		7	Parameter error	
Module type	1	0	Module Type	0x05
		1		
		2		
		3		
		4	Channel information available	1
		5-7	Reserved	0
Error byte 2	2	0-7	Reserved	0
Error byte 3	3	0-2	Reserved	0
		3	Internal diagnostic FIFO full	
		4	Power supply fault	
		5	Reserved	0
		6	Process alarm lost	
		7	Reserved	0
Channel type	4	0-6	Channel type	0x73
		7	Reserved	0
Diagnostic bits per channel	5		Number of diagnostic bit per channel	8
Number of channels	6		Number of similar channels per module	4
Channel error	7	0	Error at channel 0	
		1	Error at channel 1	
		2	Error at channel 2	
		3	Error at channel 3	

Name	Bytes	Bit	Description	Default
		4-7	Reserved	0
	8-10	0-31	Reserved	0
Error Channel 0	11	0	Parameter Error	
		1	Overtemperature	
		2	Overload	
		3	Error	
		4	Line break	
		5-7	Reserved	0
Error channel 1	12	0	Parameter Error	
		1	Overtemperature	
		2	Overload	
		3	Error	
		4	Line break	
		5-7	Reserved	0
Error channel 2	13	0	Parameter Error	
		1	Overtemperature	
		2	Overload	
		3	Error	
		4	Line break	
		5-7	Reserved	0
Error channel 3	14	0	Parameter Error	
		1	Overtemperature	
		2	Overload	
		3	Error	
		4	Line break	
		5-7	Reserved	0
Channel 4 error to Channel 31 error	15-42	0-7	Reserved	0
Time stamp	43-46		Time stamp [µs] (32-bit)	

5.31.5 Process Data† Outputs EP-4264

Byte	Format	Description	Remarks
QB0	Word	AO0	
QB1			
QB2	Word	AO1	
QB3			
QB4	Word	AO2	
QB5			
QB6	Word	AO3	
QB7			
† Internal process data mapping with data format Standard. Depending on the fieldbus specification and the data format of the communicating fieldbus components the bytes and/or words can be reversed during data transfer			

5.31.6 Value Range† EP-4264

Measurement range	Current (I) / Voltage (U)	Decimal (D)	Hexadecimal	Range	Conversion
0 – 20 mA	21.67 mA	29957	0x7505	Overloading	D = 27648 x I / 20 I = D x 20 / 27648
	20 mA	27648	0x6C00	Nominal range	
	10 mA	13824	0x3600		
	0 mA	0	0x0000		
4 – 20 mA	21.67 mA	29957	0x7505	Overloading	D = 27648 x (I – 4) / 16 I=(D x 16 / 27648)+ 4
	20 mA	27648	0x6C00	Nominal range	
	12 mA	13824	0x3600		
	4 mA	0	0x0000		
	3.6 mA	-691	0XFD4D	Underloading	
0 – 10 V	10.5V	29030	0x7166	Overloading	D = 27648 x U/10 I = D x 10 / 27648
	10 V	27648	0x6C00	Nominal range	
	5 V	13824	0x3600		
	0 V	0	0x0000		
±10 V	+10.5V	29030	0x7166	Overloading	D = 27648 x U / 10 U = D x 10 / 27648
	10 V	27648	0x6C00	Nominal range	
	5 V	13824	0x3600		
	0 V	0	0x0000		
	-5 V	-13824	0xCA00		
	-10 V	-27648	0x9400		
	-10.5V	-29030	8E9A	Underloading	
2 - 10 V	+10.5V	29376	0x72C0	Overloading	D = 27648 x (U – 2) / 8 U = D x 8 / 27648 + 2
	10 V	27648	0x6C00	Nominal range	
	6 V	13824	0x3600		
	2 V	0	0x0000		
	1.8V	-691	0XFD4D	Underloading	
1 - 5 V	5.25V	29376	0x72C0	Overloading	D = 27648 x (U – 1) / 4 U = (D x 4 / 27648) + 1
	5 V	27648	0x6C00	Nominal range	
	3 V	13824	0x3600		
	1 V	0	0x0000		
	0.9 V	-691	0XFD4D	Underloading	

Measurement range	Current (I) / Voltage (U)	Decimal (D)	Hexadecimal	Range	Conversion
0 – 5 V	5.25 V	29030	0x7166	Overloading	D = 27648 x U/5 I = D x 5 / 27648
	5 V	27648	0x6C00	Nominal range	
	2.5 V	13824	0x3600		
	0 V	0	0x0000		
±5 V	5.25 V	29376	0x72C0	Overloading	D = 27648 x (U – 1) / 4 U = (D x 4 / 27648) + 1
	5 V	27648	0x6C00	Nominal range	
	2.5 V	13824	0x3600		
	0 V	0	0x0000		
	-2.5 V	-13824	0xCA00		
	-5 V	-27648	0x9400		
	-5.25 V	-43200	0x5740	Underloading	
† If the process value is beyond the valid value range, the corresponding channel releases 0 V and 0 mA respectively The following applies for all ranges: value > overload range = output deactivated value < underload range = output deactivated					

5.32 Analog Input Module EP-3704

Figure 195: Analog Input Module EP 3704

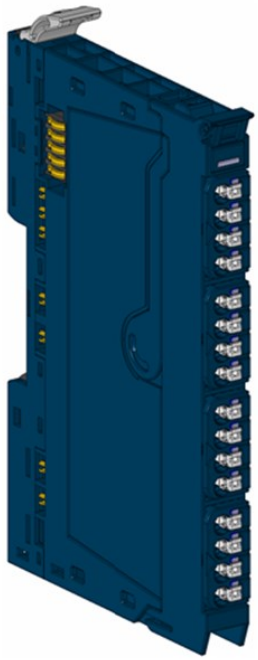

Figure 196: Connection Diagram EP-3704

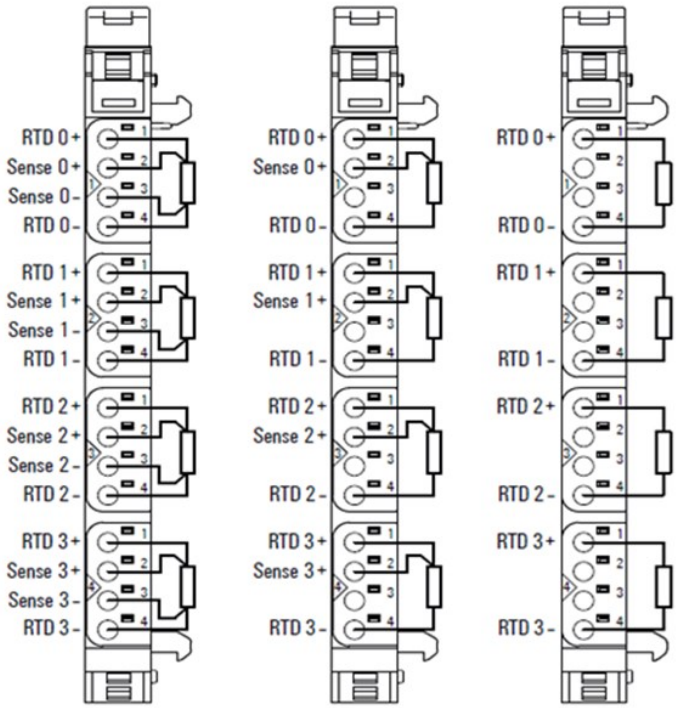

The analog input module EP-3704 can detect up to 4 analog resistance thermometers. The resolution is 16 bits per channel. A sensor can be connected to each connector in a 2-wire, 3-wire or 4-wire connection. Mixed operation using different sensors as well as different connection methods is possible. Sensor type and temperature range are set using parameterization. A status LED is assigned to each channel.

The inputs are protected against voltage surges and overcurrent. Voltages that exceed ±30 V may cause the destruction of the module.

The module provides individual channel diagnosis with channel related error messages.

5.32.1 LED Indicators EP-3704

	Module Status	**Green:** Communication over the system bus **Red:** Module System Fault or Diagnostic Fault
	1.1	**Red:** channel error
	2.1	Red: channel error
	3.1	Red: channel error
	4.1	Red: channel error

For error messages refer to Section 12, LED Indicators and Troubleshooting.

Figure 197: Block Diagram EP-3704

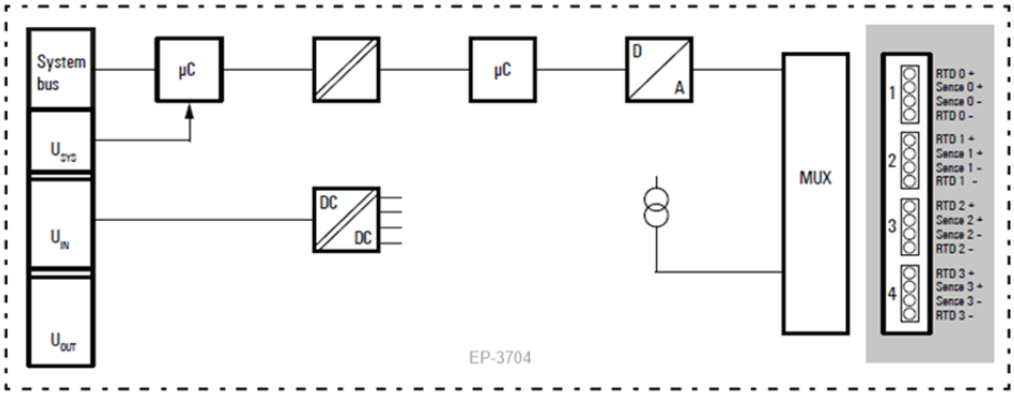

5.32.2 Specifications EP-3704

Specifications	Description
System data	
Data	Process, parameter and diagnostic data depend on the network adapter used (refer to Section, Order and Arrangement of Modules).
Interface	RSTi-EP I/O communication bus
System bus transfer rate	48 Mbps
Inputs	
Number	4
Sensor types	Pt100, Pt200, Pt500, Pt1000, Ni100, Ni120, Ni 200, Ni500, Ni1000, Cu10, 40 Ω, 80 Ω, 150 Ω, 300 Ω, 500 Ω, 1 kΩ, 2 kΩ, 4 kΩ
Resolution	16 bits
Accuracy	max. 0.2 % FSR / 0.3 % FSR for Ni sensors / 0.6 % FSR for Cu10
Sensor connection	2-wire, 3-wire, 4-wire
Sensor current	depending on the sensor type 0.75 mA (Pt100, Ni100, Ni120, Cu10, 40 Ω, 80 Ω, 150 Ω, 300 Ω) or 0.25 mA (Pt200, Pt500, Pt1000, Ni200, Ni500, Ni1000, 500 Ω, 1 kΩ, 2 kΩ, 4 kΩ)
Max. wire resistance / measurement range	2.5 Ω / 40 Ω, 5 Ω / 80 Ω, 10 Ω / 150 Ω and Cu10, 25 Ω in all other measuring ranges
Temperature coefficient	±50 ppm/K max.
Temperature range	-200 to +850°C (-328 to 1562 °F)
Conversion time	36 to 240ms, adjustable
Common mode input voltage range	Channel to channel: max. ±2 V
	Channel to voltage supply: max. ±50 V
Reverse polarity protection	Yes
Module diagnosis	Yes
Individual channel diagnosis	Yes
Supply	
Supply voltage	20.4V – 28.8V
Current consumption from system current path ISYS,	8 mA
Current consumption from input current path IIN	20 mA
General data	
Weight	91 g (3.21 oz)
For additional general data, refer to Section, General Technical Data for I/O Modules.	

5.32.3 Modifiable Parameters for EP-3704

Channel	Description	Options	Default
	Temperature unit	Degree Celsius (0) / Degree Fahrenheit (1) / Kelvin (2)	Degree Celsius
0 - 3	Measurement range	PT100 -200 ... 850 Degree Celsius (0) / PT200 -200 ... 850 Degree Celsius (1) / PT500 -200 ... 850 Degree Celsius (2) / PT1000 -200 ... 850 Degree Celsius (3) / NI100 -60 ... 250 Degree Celsius (4) / NI120 -80 ... 260 Degree Celsius (5) / NI200 -60 ... 250 Degree Celsius (6) / NI500 -60 ... 250 Degree Celsius (7) / NI1000 -60 ... 250 Degree (8) / Cu10 -100 ... 260 Degree Celsius (9) / Resistance 40 Ω (10) / Resistance 80 Ω (11) / Resistance 150 Ω (12) / Resistance 300 Ω (13) / Resistance 500 Ω (14) / Resistance 1 kΩ (15) / Resistance 2 kΩ (16) / Resistance 4 kΩ (17) / disabled (18)	disabled
0 - 3	Connection type	2-wire (0) / 3-wire (1) / 4-wire (2)	2-wire
0 - 3	Conversion time	240ms (0) / 130ms (1) / 80ms (2) / 55ms (3) / 43ms (4) / 36ms (5)	80ms
0 - 3	Channel diagnostics	disabled (0) / enabled (1)	disabled
0 - 3	Limit value monitoring	disabled (0) / enabled (1)	disabled
0 - 3	High limit value	-32,768 ... 32,767	0
0 - 3	Low limit value	-32,768 ... 32,767	0

5.32.4 Diagnostic Data EP-3704

Name	Bytes	Bit	Description	Default
Error indicator	0	0	Module error	
		1	Internal error	
		2	External error	
		3	Channel error	
		4	Error	
		5	Power supply fault	
		6	Reserved	0
		7	Parameter error	
Module type	1	0	Module Type	0x05
		1		
		2		
		3		
		4	Channel information available	1
		5	Reserved	0
		6	Reserved	0
		7	Reserved	0
Error byte 2	2	0-7	Reserved	0
Error byte 3	3	0-2	Reserved	0
		3	Internal diagnostic FIFO full	
		4	Power supply fault	
		5	Reserved	0
		6	Process alarm lost	
		7	Reserved	0
Channel type	4	0-6	Channel type	0x71
		7	Reserved	0
Diagnostic bits per channel	5		Number of diagnostic bits per channel	8
Number of channels	6		Number of similar channels per module	4
Channel error	7	0	Error at channel 0	
		1	Error at channel 1	
		2	Error at channel 2	
		3	Error at channel 3	
		4-7	Reserved	0
Channel error	8	8-15	Reserved	0
Channel error	9	16-23	Reserved	0
Channel error	10	24-31	Reserved	0
Channel 0 error	11	0	Parameter Error	
		1	Reserved	0
		2	Reserved	0
		3	Reserved	0
		4	Line break	
		5	Process alarm lost	
		6	Lower limit exceeded	
		7	Upper limit exceeded	
Channel 1 error	12	0	Parameter Error	
		1	Reserved	0
		2	Reserved	0

Name	Bytes	Bit	Description	Default
		3	Reserved	0
		4	Line break	
		5	Process alarm lost	
		6	Lower limit exceeded	
		7	Upper limit exceeded	
Channel 2 error	13	0	Parameter Error	
		1	Reserved	0
		2	Reserved	0
		3	Reserved	0
		4	Line break	
		5	Process alarm lost	
		6	Lower limit exceeded	
		7	Upper limit exceeded	
Channel 3 error	14	0	Parameter Error	
		1	Reserved	0
		2	Reserved	0
		3	Reserved	0
		4	Line break	
		5	Process alarm lost	
		6	Lower limit exceeded	
		7	Upper limit exceeded	
Channel 4 error to Channel 31 error	15-42	0-7	Reserved	0
Time stamp	43-46		Time stamp [µs] (32-bit)	

5.32.5 Process Data† Inputs EP-3704

Byte	Format	Description	Remarks
IB0	Word	RTD0	
IB1			
IB2	Word	RTD1	
IB3			
IB4	Word	RTD2	
IB5			
IB6	Word	RTD3	
IB7			

† Internal process data mapping with data format “Standard”. Depending on the fieldbus specification and the data format of the communicating fieldbus components the bytes and/or words can be reversed during data transfer.

5.32.6 Resistance Measurement Range EP-3704

Measurement range	Resistance	Decimal	Hexadecimal	Range
40 Ω	> 47.04 Ω	32,767	0x7FFF	Overloading or line break
	47.04 Ω	32511	0x7EFF	Overloading
	40 Ω	27648	0x6C00	Nominal range
	0	0	0x0000	
80 Ω	> 94.07 Ω	32,767	0x7FFF	Overloading or line break
	94.07 Ω	32511	0x7EFF	Overloading
	80 Ω	27648	0x6C00	Nominal range
	0	0	0x0000	
150 Ω	> 176.4 Ω	32,767	0x7FFF	Overloading or line break
	176.4 Ω	32511	0x7FFF	Overloading
	150 Ω	27648	0x6C00	Nominal range
	0	0	0x0000	
300 Ω	> 352.77 Ω	32,767	0x7FFF	Overloading or line break
	352.77 Ω	32511	0x7FFF	Overloading
	300 Ω	27648	0x6C00	Nominal range
	0	0	0x0000	
500 Ω	> 587.9 Ω	32,767	0x7FFF	Overloading or line break
	587.9 Ω	32511	0x7FFF	Overloading
	500 Ω	27648	0x6C00	Nominal range
	0	0	0x0000	
1 kΩ	> 1.177 kΩ	32,767	0x7FFF	Overloading or line break
	1.177 kΩ	32511	0x7FFF	Overloading
	1.0 kΩ	27648	0x6C00	Nominal range
	0	0	0x0000	
2 kΩ	2.352 kΩ	32,767	0x7FFF	Overloading or line break
	2.352 kΩ	32511	0x7FFF	Overloading
	2.0 kΩ	27648	0x6C00	Nominal range
	0	0	0x0000	
4 kΩ	> 4.703 kΩ	32,767	0x7FFF	Overloading or line break
	4.703 kΩ	32511	0x7FFF	Overloading
	4.0 kΩ	27648	0x6C00	Nominal range
	0	0	0x0000	

5.32.7 Temperature Measurement Ranges EP-3704

Measurement range	Value in °C 0.1° resolution	Value in °F 0.1°/digit	Value in °K 0.1°K/digit	Range
Pt100	-2,000 to 8,500	-3,280 to 15620	732 to 11232	-200 °C to +850 °C
	-2,040	-3,352	692	Underloading
	8540	15692	11272	Overloading
	32,767	32,767	32,767	Line break
Pt200	-2,000 to 8,500	-3,280 to 15620	732 to 11232	-200 °C to +850 °C
	-2,040	-3,352	692	Underloading
	8540	15692	11272	Overloading
	32,767	32,767	32,767	Line break
Pt500	-2,000 to 8,500	-3,280 to 15620	732 to 11232	-200 °C to +850 °C
	-2,040	-3,352	692	Underloading
	8540	15692	11272	Overloading
	32,767	32,767	32,767	Line break
Pt1000	-2,000 to 8,500	-3,280 to 15620	732 to 11232	-200 °C to +850 °C
	-2,040	-3,352	692	Underloading
	8540	15692	11272	Overloading
	32,767	32,767	32,767	Line break
Ni100	-600 to +2500	-760 to 4820	2132 to 5232	-60 °C to 250 °C
	-640	-832	2092	Underloading
	2540	4892	5272	Overloading
	32,767	32,767	32,767	Line break
Ni120	-800 to +2600	-1120 to +5000	1932 to 5332	-80 °C to 260 °C
	-840	-1192	1892	Underloading
	2640	5072	5372	Overloading
	32,767	32,767	32,767	Line break
Ni200	-600 to +2500	-760 to 4820	2132 to 5232	-60 °C to 250 °C
	-640	-832	2092	Underloading
	2540	4892	5272	Overloading
	32,767	32,767	32,767	Line break
Ni500	-600 to +2500	-760 to 4820	2132 to 5232	-60 °C to 250 °C
	-640	-832	2092	Underloading
	2540	4892	5272	Overloading
	32,767	32,767	32,767	Line break
Ni1000	-600 to +2500	-760 to 4820	2132 to 5232	-60 °C to 250 °C
	-640	-832	2092	Underloading
	2540	4892	5272	Overloading
	32,767	32,767	32,767	Line break
Cu10	-1,000 to +2600	-1480 to 5000	1732 to 5332	-100 °C to 260 °C
	-1040	-1552	1692	Underloading
	2640	5072	5372	Overloading
	32,767	32,767	32,767	Line break

5.32.8 Process Alarm EP-3704

Name	Number of bytes	Function
High alarm	1	Bit 0: Upper limit exceeded channel 0
		Bit 1: Upper limit exceeded channel 1
		Bit 2: Upper limit exceeded channel 2
		Bit 3: Upper limit exceeded channel 3
		Bit 4 – 7: Reserved
Low alarm	1	Bit 0: Lower limit exceeded channel 0
		Bit 1: Lower limit exceeded channel 1
		Bit 2: Lower limit exceeded channel 2
		Bit 3: Lower limit exceeded channel 3
		Bit 4 – 7: Reserved
Timestamp	2	The two least significant bytes of the internal 32-bit timer

5.33 Analog Input Module EP-3804

Figure 198: Analog Input Module EP-3804

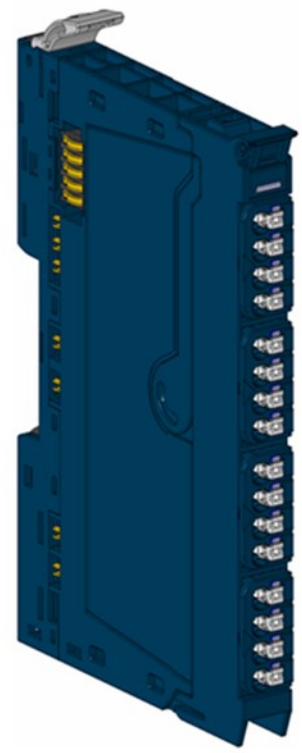

Figure 199: Connection Diagram EP-3804

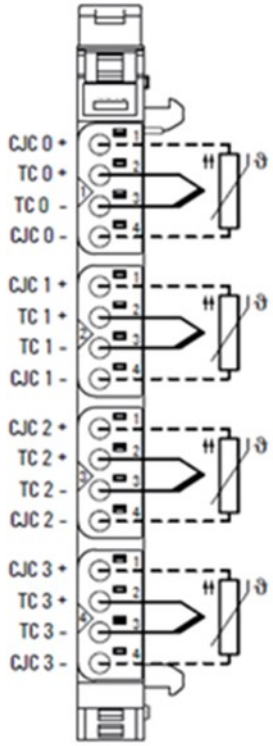

The analog input module EP-3804 can detect up to 4 analog thermocouple sensors or voltages between ±15 mV and ±2V. The resolution is 16 bits per channel. Sensor type and temperature range are set using parameterization. Mixed operation using different sensors is possible. For each channel, an internal or external cold-junction compensation (CJC) can be parameterized. A status LED is assigned to each channel.

The inputs are protected against voltage surges and overcurrent. Voltages that exceed ±30 V may cause the destruction of the module.

The module provides individual channel diagnosis with channel related error messages.

5.33.1 LED Indicators EP-3804

	Module Status	**Green:** Communication over the system bus Red: Module System Fault or Diagnostic Fault
	1.1	**Red:** channel error
	2.1	**Red:** channel error
	3.1	**Red:** channel error
	4.1	**Red:** channel error

For error messages refer to Section 12, LED Indicators and Troubleshooting.

Figure 200: Block Diagram EP-3804

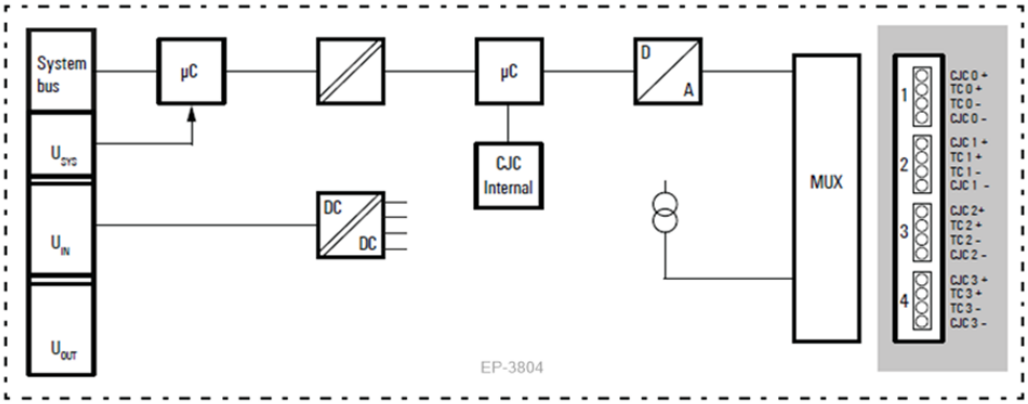

5.33.2 Specifications EP-3804

Specifications	Description
System data	
Data	Process, parameter and diagnostic data depend on the network adapter used (refer to Section, Order and Arrangement of Modules).
Interface	RSTi-EP I/O communication bus
System bus transfer rate	48 Mbps
Inputs	
Number	4
Sensor types	J, K, T, B, N, E, R, S, L, U, C, mV
Resolution	16 bits
Accuracy	Conversion time ≥ 80ms: 10 µV + 0.1 % of voltage measurement range (without cold-junction measurement error)
Sensor connection	2-wire
Sensor current	0.25 mA for the cold-junction compensation with a Pt1000
Cold junction compensation	Internal and external (Pt1000), int. accuracy ≤ 3 K
Temperature coefficient	50 ppm/K max.
Temperature range	-200 to +2,315°C (-328 to 4199 °F)
Conversion time	36 to 240ms, adjustable
Internal resistance	> 1 MΩ
Reverse polarity protection	Yes
Module diagnosis	Yes
Individual channel diagnosis	Yes
Supply	
Supply voltage	20.4V – 28.8V
Current consumption from system current path ISYS,	8 mA
Current consumption from input current path IIN	20 mA
General data	
Weight	86 g (3.03 oz)
For additional general data, refer to Section, General Technical Data for I/O Modules.	

5.33.3 Modifiable Parameters for EP-3804

Channel	Description	Options	Default
	Temperature unit	Degree Celsius (0) / Degree Fahrenheit (1) / Degree Kelvin (2)	Degree Celsius
0 - 3	Measurement range	TC Type J (0) / TC Type K (1) / TC Type N (2) / TC Type R (3) / TC Type S (4) / TC Type T (5) / TC Type B (6) / TC Type C (7) / TC Type E (8) / TC Type L (9) / TC Type U (10) / ± 15.625 mV (11) / ± 31.25 mV (12) / ± 62.5 mV (13) / ± 125 mV (14) / ± 250 mV (15) / ± 500 mV (16) / ± 1,000 mV (17) / ± 2,000 mV (18) / disabled (19)	disabled
0 - 3	Cold junction compensation	internal (0) / external Channel 0 (1) / external Channel 1 (2) / external Channel 2 (3) / external Channel 3 (4)	internal
0 - 3	Conversion time	240ms (0) / 130ms (1) / 80ms (2) / 55ms (3) / 43ms (4) / 36ms (5)	80ms
0 - 3	Channel diagnostics	disabled (0) / enabled (1)	disabled
0 - 3	Limit value monitoring	disabled (0) / enabled (1)	disabled
0 - 3	High limit value	-32,768 ... 32,767	0
0 - 3	Low limit value	-32,768 ... 32,767	0

5.33.4 Diagnostic Data EP-3804

Name	Bytes	Bit	Description	Default
Error indicator	0	0	Module error	
		1	Internal error	
		2	External error	
		3	Channel error	
		4	Error	
		5	Power supply fault	
		6	Reserved	0
		7	Parameter error	
Module type	1	0	Module Type	0x05
		1		
		2		
		3		
		4	Channel information available	1
		5	Reserved	0
		6	Reserved	0
		7	Reserved	0
Error byte 2	2	0-7	Reserved	0
Error byte 3	3	0-2	Reserved	0
		3	Internal diagnostic FIFO full	
		4	Power supply fault	
		5	Reserved	0
		6	Process alarm lost	
		7	Reserved	0
Channel type	4	0-6	Channel type	0x71
		7	Reserved	0
Diagnostic bits per channel	5		Number of diagnostic bit per channel	8
Number of channels	6		Number of similar channels per module	4
Channel error	7	0	Error at channel 0	
		1	Error at channel 1	
		2	Error at channel 2	
		3	Error at channel 3	
		4-7	Reserved	0
Channel error	8	8-15	Reserved	0
Channel error	9	16-23	Reserved	0
Channel error	10	24-31	Reserved	0
Channel 0 error	11	0	Parameter Error	
		1	Reserved	0
		2	Reserved	0
		3	CJC error	
		4	Line break	
		5	Process alarm lost	
		6	Lower limit exceeded	
		7	Upper limit exceeded	
Channel 1 error	12	0	Parameter Error	

Name	Bytes	Bit	Description	Default
		1	Reserved	0
		2	Reserved	0
		3	CJC error	
		4	Line break	
		5	Process alarm lost	
		6	Lower limit exceeded	
		7	Upper limit exceeded	
Channel 2 error	13	0	Parameter Error	
		1	Reserved	0
		2	Reserved	0
		3	CJC error	
		4	Line break	
		5	Process alarm lost	
		6	Lower limit exceeded	
		7	Upper limit exceeded	
Channel 3 error	14	0	Parameter Error	
		1	Reserved	0
		2	Reserved	0
		3	CJC error	
		4	Line break	
		5	Process alarm lost	
		6	Lower limit exceeded	
		7	Upper limit exceeded	
Channel 4 error to Channel 31 error	15-42	0-7	Reserved	0
Time stamp	43-46		Time stamp [µs] (32-bit)	

5.33.5 Process Data† Inputs EP-3804

Byte	Format	Description	Remarks
IB0	Word	TC0	
IB1			
IB2	Word	TC1	
IB3			
IB4	Word	TC2	
IB5			
IB6	Word	TC3	
IB7			
† Internal process data mapping with data format Standard. Depending on the fieldbus specification and the data format of the communicating fieldbus components the bytes and/or words can be reversed during data transfer			

5.33.6 Voltage Measurement Ranges EP-3804

Measurement range	Voltage	Decimal signal range	Hexadecimal signal range
±15.625 mV	15.625 mV	32,767	0x7FFF
	-15.625 mV	-32,768	0x8000
±31.25 mV	31.25 mV	32,767	0x7FFF
	-31.25 mV	-32,768	0x8000
±62.5 mV	62.5 mV	32,767	0x7FFF
	-62.5 mV	-32,768	0x8000
±125 mV	125 mV	32,767	0x7FFF
	-125 mV	-32,768	0x8000
±250 mV	250 mV	32,767	0x7FFF
	-250 mV	-32,768	0x8000
±500 mV	500 mV	32,767	0x7FFF
	-500 mV	-32,768	0x8000
±1 V	+1 V	32,767	0x7FFF
	-1 V	-32,768	0x8000
±2 V	+2 V	32,767	0x7FFF
	-2 V	-32,768	0x8000

5.33.7 Temperature Measurement Ranges EP-3804

Measurement Range	Value in °C 0.1° resolution	Value in °F 0.1°/digit	Value in °K 0.1°K/digit	Range
Type K	-2,000 to 13,720	-3,280 to 25,016	732 to 16,452	-200 °C to +1,372 °C
	-2,040	-3,352	692	Underloading
	13,760	25,088	16,492	Overloading
	32,767	32,767	32,767	Line break, cold compensation error
Type J	-2,100 to 12,000	-3,460 to 21,920	632 to 14,732	-210 °C to +1,200 °C
	-2,140	-3,532	592	Underloading
	12,040	21,992	14,772	Overloading

Measurement Range	Value in °C 0.1° resolution	Value in °F 0.1°/digit	Value in °K 0.1°K/digit	Range
	32,767	32,767	32,767	Line break, cold compensation error
Type B	500 to 8,500	1,220 to 32,767 (limited range) 3,276.7°F = 1,802.6°C	3,232 to 20,932	+50 °C to +1,820 °C
	460	1,148	3,192	Underloading
	18,240	33,152	20,972	Overloading
	32,767	32,767	32,767	Line break, cold compensation error
Type N	-2,000 to 13,000	-3,280 to 23,720	4,732 to 15,732	-200 °C to +1,300 °C
	-2,040	-3,352	692	Underloading
	13,040	23,792	15,772	Overloading
	32,767	32,767	32,767	Line break, cold compensation error
Type E	-2,000 to +10,000	-3,280 to 18,320	4,732 to 12,732	-200 °C to 1,000 °C
	-2,040	-3,352	692	Underloading
	10,040	18,392	12,772	Overloading
	32,767	32,767	32,767	Line break, cold compensation error
Type R	-500 to +17,680	-580 to +32,144	3,232 to 20,412	-50 °C to +1768 °C
	-540	-652	2,192	Underloading
	17,720	32,216	20,452	Overloading
	32,767	32,767	32,767	Line break, cold compensation error
Type S	-500 to +17,680	-580 to +32,144	3,232 to 20,412	-50 °C to +1768 °C
	-540	-652	2,192	Underloading
	17,720	32,216	20,452	Overloading
	32,767	32,767	32,767	Line break, cold compensation error
Type T	-2,000 to +4,000	-3,280 to 7,520	732 to 6,732	-200 °C to +400 °C
	-2,040	-3,352	692	Underloading
	4,040	7,592	6,772	Overloading
	32,767	32,767	32,767	Line break, cold compensation error
Type L	-2,000 to +9,000	-3,280 to 16,520	732 to 11,732	-200 °C to +900 °C
	-2,040	-3,352	692	Underloading
	9,040	16,592	11,772	Overloading
	32,767	32,767	32,767	Line break, cold compensation error
Type U	-2,000 to +6,000	-3,280 to 11,120	732 to 8,732	-200 °C to +600 °C
	-2,040	-3,352	692	Underloading
	6,040	11,192	8,772	Overloading
	32,767	32,767	32,767	Line break, cold compensation error
Type C	0 to 23,150	320 to 32,767 (limited range) 3,276.7°F = 1,802.6°C	2,732 to 25,882	0 °C to +2,315 °C

Measurement Range	Value in °C 0.1° resolution	Value in °F 0.1°/digit	Value in °K 0.1°K/digit	Range
	-40	248	2,692	Underloading
	23,190	32,767	25,922	Overloading
	32,767	32,767	32,767	Line break, cold compensation error

5.33.8 Process Alarm EP-3804

Name	Number of bytes	Function
High alarm	1	Bit 0: Upper limit exceeded channel 0
		Bit 1: Upper limit exceeded channel 1
		Bit 2: Upper limit exceeded channel 2
		Bit 3: Upper limit exceeded channel 3
		Bit 4 – 7: Reserved
Low alarm	1	Bit 0: Lower limit exceeded channel 0
		Bit 1: Lower limit exceeded channel 1
		Bit 2: Lower limit exceeded channel 2
		Bit 3: Lower limit exceeded channel 3
		Bit 4 – 7: Reserved
Timestamp	2	The two least significant bytes of the internal 32-bit timer

5.34 Power Measurement Module EP-1813

Figure 201: Power Measurement Module EP-1813

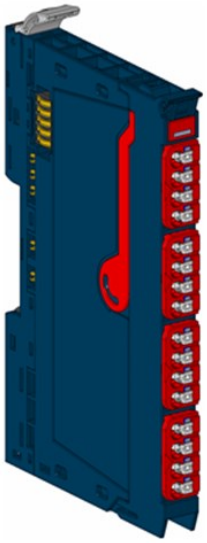

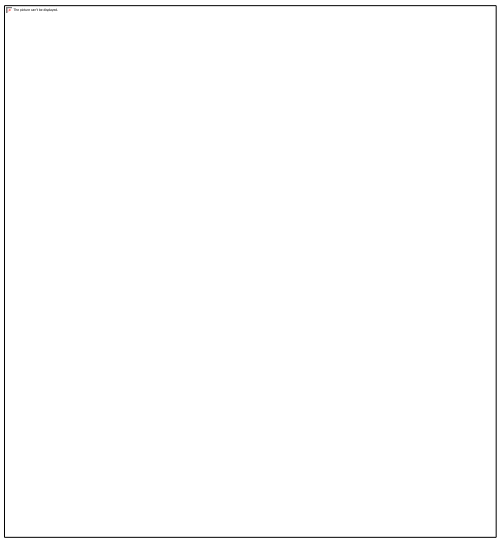

The power measurement module EP-1813 can measure and process all relevant measurands of one or three phase current consumers (up to 500 V AC phase-to-phase voltage):

–– Current (RMS/average/peak)

–– Voltage (RMS/average)

–– Reactive, apparent and active power

–– Power consumption

–– Power factor

–– Frequency

–– Voltage upper and lower alarm

–– Current upper and lower alarm

Currents up to 5 A can be measured directly with the module. Due to the measuring in the phase conductor the current can be measured in a star as well as a delta connection without further external components. The raw measured values are transferred via the connected fieldbus to a superior PLC or a control system.

The module delivers data to the fieldbus via eight data channels (16 bit each). The data are updated within one millisecond from the module to the adapter. The content of each data channel can be chosen from 55 registers (currents, voltage, power factor, frequency as well as power and energy measuring). Additionally, limits can be parameterized the exceeding of which will trigger process alarms.

Up to three neutral conductors (N) can be connected with the first connector. One phase conductor (at LX) and one 1 A conductor (at LX‘ 1A) or one 5 A conductor (at LX‘ 5A) can be connected to each of the other three connectors. The three current measurement connections can be used concurrently all for the same measurement range (1 A or 5 A) only. The mains connection must be fused with 1 A/5 A respectively.
A status LED is assigned to each channel.

⚠CAUTION

Possible danger to life:

- Always Disconnect the Power Supply to the station before working with the module and secure the station against being switched on again.
- The touch-safe protection of this module is only provided with the DIN rail earthed properly.
- Make sure that the DIN rail is connected to PE by earth terminals before commissioning the module.

Attention

The module can be destroyed by overload!

- The measurement connections L1', L2' and L3' are internally connected to L1, L2, and L3 via a shunt. Neutral conductors must not be connected to L1', L2' and L3'!
- The module is temporary overload-capable (max. 5 seconds up to the fivefold current). Make sure that there will be no higher current peaks (e.g. by saturating the transformer)!

Figure 202: Connection diagram EP-1813: Delta Connection (Example Measurement 1 A)

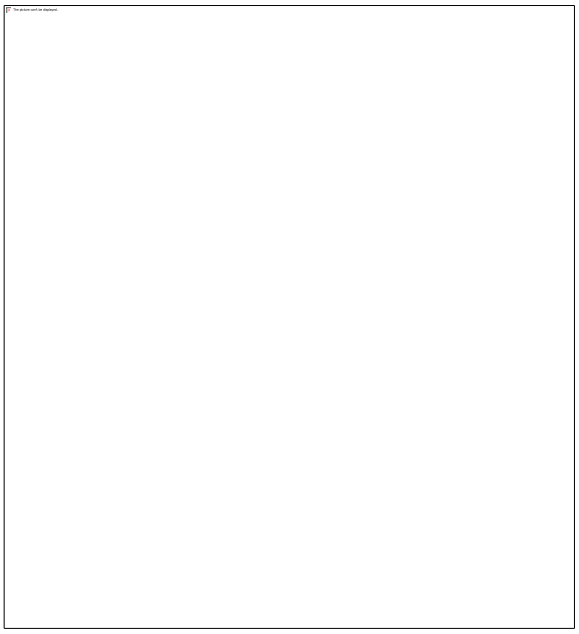

Figure 203: Connection diagram EP-1813: Star Connection (Example Measurement 1 A)

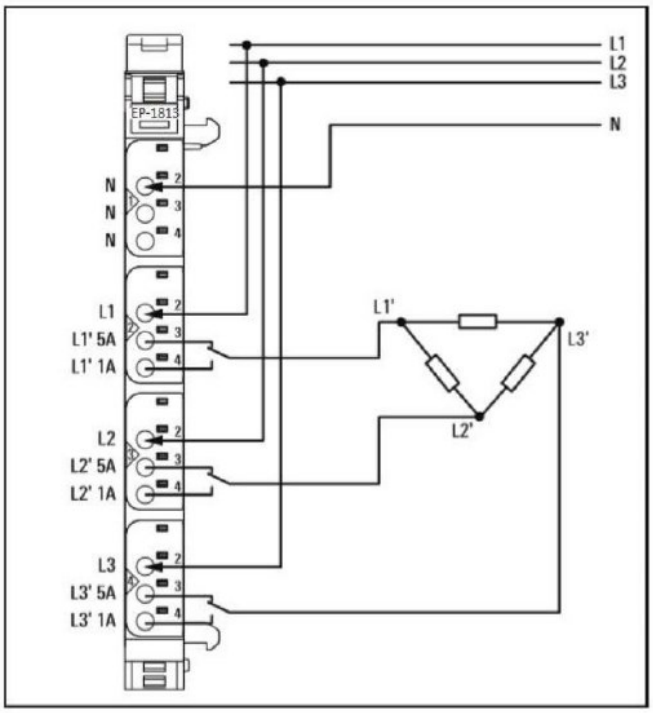

Application with current transformer

⚠CAUTION

Possible danger to life:

In case a current transformer is used for current measuring, the phase potential will be on its secondary winding. This results in a hazardous voltage at the transformer.

- Take care for an appropriate protection device (e.g. covering).
- In case further measuring devices shall be placed within the current measuring circuit the relevant standards must be regarded.

⚠CAUTION

Hazardous Voltage on open circuit path!

- Never use a transformer in no load condition.
- Always connect the transformer with the power measurement module **before** you start to operate the transformer.
- Never unlock the connector frame of the module during operation with a transformer.

The measurement range of the module (1 A / 5 A) can be extended by using a current transformer. The transformer must deliver a current of 1 A / 5 A including internal resistance and conductor loop. This current must be reflected into the internal measuring resistance. This is only possible by connecting one end of the secondary winding with the respective phase and the other end with the respective current output 1 A / 5 A (see connection diagrams with current
transformer).

Note: If a current transformer is used, the conductors must be fused with 63 mA quick-acting fuses (see connection examples with current transformer)

Figure 204: Connection diagram EP-1813: Delta Connection with Current Transformer > 5 A (Example)

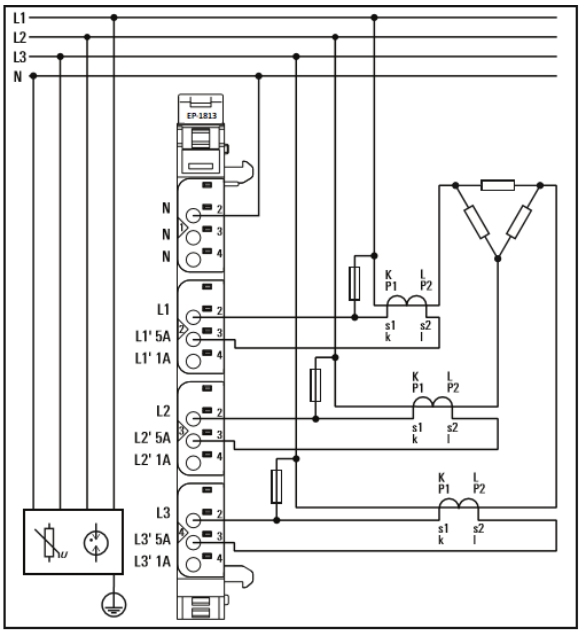

Figure 205: Connection diagram EP-1813: Star Connection with measuring current transformer > 5 A (Example)

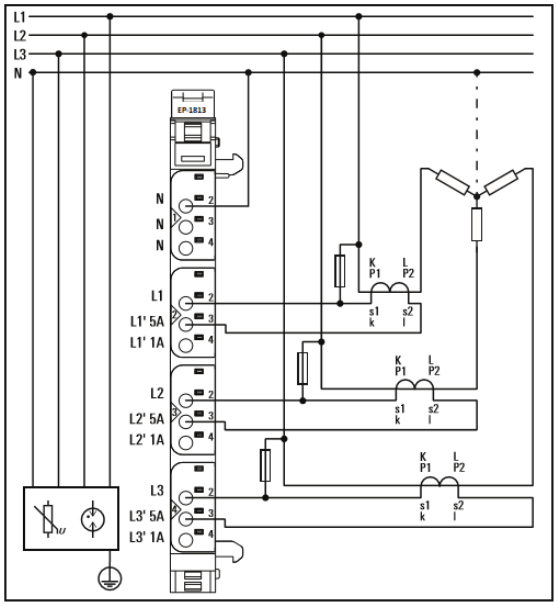

Figure 206: Connection diagram EP-1813: Single phase measurement with current transformer

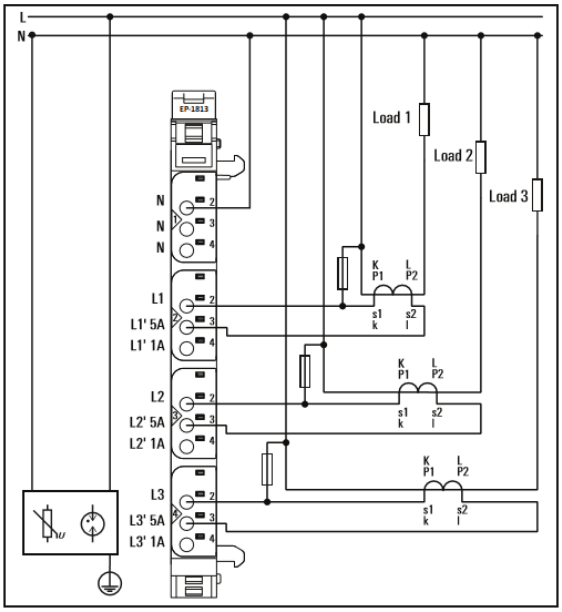

Note: If the module is used in an environment of overvoltage category III, transient overvoltage must be limited to ≤ 2500V

5.34.1 LED Indicators EP-1813

	Module Status	**Green:** Communication over the system bus **Red:** Module System Fault or Diagnostic Fault (Collective error diagnostics)
	1.1	--
	1.2	--
	1.3	--
	1.4	--
	2.1	--
	2.2	Yellow: Voltage >70 V at L1 Yellow flashing: Running light with 3.2 and 4.2 indicates the phase sequence
	2.3	Red: (parameterized) current alarm limit[1] exceeded
	2.4	Red: (parameterized) voltage alarm limit[2] exceeded
	3.1	
	3.2	Yellow: Voltage >70 V at L2 Yellow flashing: Running light with 2.2 and 4.2 indicates the phase sequence
	3.3	Red: (parameterized) current alarm limit[1] exceeded
	3.4	Red: (parameterized) voltage alarm limit[2] exceeded
	4.1	Red: Line break or range exceeded input 3
	4.2	Yellow: Voltage >70 V at L3 Yellow flashing: Running light with 2.2 and 3.2 indicates the phase sequence
	4.3	Red: (parameterized) current alarm limit[1] exceeded
	4.4	Red: (parameterized) voltage alarm limit[2] exceeded
		1) Max. nominal input current 1 A bzw. 5 A 2) Max. nominal input voltage 300 V

Figure 207: Block Diagram EP-1813

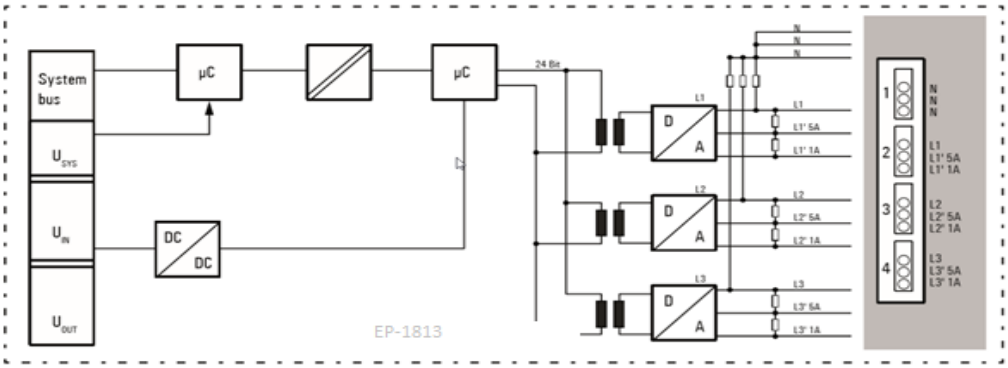

5.34.2 Specifications EP-1813

Specifications	Description
System data	
Data	Process, parameter and diagnostic data depend on the network adapter used.
Interface	RSTi-EP system bus
System bus transfer rate	48 Mbps
Potential isolation	Test voltage: max. 28.8 V within one channel, 500 V DC field/system Pollution severity level: 2 Overvoltage category: II
Connections	
Number	3 Neutral conductors
	3 Phase conductors (voltage measurement)
	3 Phase conductors (current measurement 5 A)
	3 Phase conductors (current measurement 1 A)
Nominal input voltage[1)]	0 ... 300 Veff AC (L–N); one or three phase measurement
Rated voltage	250 V AC (L–N) +20%
Nominal input current	max. 1 A at measuring connection L' 1 A (current measurement in the phase conductor)
	max. 5 A at measuring connection L' 5 A (current measurement in the phase conductor)
Sampling rate	3300 Samples/s
Resolution (per channel)	16 Bit (internally 24 Bit)
Frequency range	45 ... 65 Hz
Limiting frequency of the input filter[2)]	typ. 4, 5 kHz
Harmonics analysis	Visualization for the first 31 harmonics; 1% accuracy guaranteed for the first 10 harmonics (Blackman-Harris Window)
Isolation	3, 0 kVeff (1 min)
Rated impulse voltage	4 kV
Overvoltage category	CAT II (IEC 61010-1)
Measuring procedure	True RMS in conjunction with high resolution Delta Sigma converter
Measuring accuracy3[)]	0, 5% for measured values relative to the upper limit of effective range (U/I) 1% for calculated values
Temperature coefficient	U: 150 ppm/K I: 150 ppm/K
Conducted disturbances	EN 61000-4-6/IEC 61000-4-6 < ±10.0%
Input impedance	2,4 MΩ per channel

Measuring shunt	4 mΩ (at 5 A), 44 mΩ (at 1 A)
Supply	
Supply voltage	24 V DC +20% /-15%
Current consumption from system current path I_{SYS}	8 mA
Current consumption from input current path I_{IN}	12 mA
General data	
Weight (operational status)	87 g
ATEX conform	No
For additional general data, refer to Section, General Technical Data for I/O Modules.	

[1] Nominal input voltage with corner-grounded systems: 0 ... 200 V_{eff} AC.

[2] Typical frequency curve for current and voltage measurement.

[3] Current and voltage values as well as the phase angle within each phase are measured and are available with 0.5% accuracy. All other results are based on the noted measuring values and are available with 1% accuracy.

5.34.3 Modifiable Parameters for EP-1813

Name	Description / data width	Options[1]	Default
Current range	1 Bit	1 A (0) / 5 A (1)	1 A
Harmonic select	Selection of Harmonic, valid for all Harmonic measurements (min. 6 Bit)	1 ... 31 (1 ... 31)	1 = fundamental
Voltage alarm lower limit enable	1 Bit	disabled (0) / enabled (1)	disabled
Voltage alarm lower limit	Positive, absolute values only (16 Bit)	0 ... 300 V (0 ... 27648)	0 = 0x0
Voltage alarm upper limit enable	1 Bit	disabled (0) / enabled (1)	disabled
Voltage alarm upper limit	Positive, absolute values only (16 Bit)	0 ... 300 V (0 ... 27648)	300 V = 0x6C00
Current alarm lower limit enable	1 Bit	disabled (0) / enabled (1)	disabled
Current alarm lower limit	Positive, absolute values only (16 Bit)	0 ... 5 A (0 ... 27648)	0 = 0x0
Current alarm upper limit enable	1 Bit	disabled (0) / enabled (1)	disabled
Current alarm upper limit	Positive, absolute values only (16 Bit)	0 ... 5 A (0 ... 27648)	100% = 0x6C00
Current imbalance alarm enable	1 Bit	disabled (0) / enabled (1)	disabled
Current imbalance alarm limit	16 Bit	0 ... 100% (0 ... 16383)	100%

Name	Description / data width	Options[1)]	Default
Frequency alarm lower limit enable	1 Bit	disabled (0) / enabled (1)	disabled
Frequency alarm lower limit	16 Bit	45 ... 65 Hz (5760 ... 8320)	45 Hz
Frequency alarm upper limit enable	1 Bit	disabled (0) / enabled (1)	disabled
Frequency alarm upper limit	16 Bit	45 ... 65 Hz (5760 ... 8320)	65 Hz
Power factor alarm enable	1 Bit	disabled (0) / enabled (1)	disabled
Power factor alarm lower limit	Positives values only (16 Bit)	0 ... 1 (0 ... 16383)	0
Diagnostic alarm	1 Bit	disabled (0) / enabled (1)	disabled
Channel 0 ... 7: Measuring value	RMS voltage U_{eff} of the selected phase against N	RMS voltage L1 (0) / L2 (1) / L3 (2)	
	Average RMS voltage $\bar{U}_{eff}$ of the selected phase against N	RMS voltage average (3)	
	RMS current $\bar{I}_{eff}$ of the selected phase	RMS current L1 (4) / L2 (5) / L3 (6)	
	Average RMS current $\bar{I}_{eff}$ of all connected phases	RMS current average (7)	
	Peak current during last accumulation interval	Peak current L1 (8) / L2 (9) / L3 (10)	
	Line frequency	Line frequency (11)	
	Harmonic power at the selected harmonic	Harmonic power L1 (12) / L2 (13) / L3 (14)	
	Harmonic reactive power at the selected harmonic	Harmonic reactive power L1 (15) / L2 (16) / L3 (17)	
	Harmonic apparent power at the selected harmonic	Harmonic apparent power L1 (18) / L2 (19) / L3 (20)	
	Ratio between the absolute value of the reactive power and the apparent power of the selected phase	Power factor L1 (21) / L2 (22) / L3 (23)	
	Voltage at the selected harmonic	Total power factor (24)	
	Voltage at the selected harmonic	Harmonic voltage L1 (25) / L2 (26) / L3 (27)	
	Current at the selected harmonic	Harmonic current L1 (28) / L2 (29) / L3 (30)	
	Active power at the fundamental of the selected phase	Active power L1 (31) / L2 (32) / L3 (33)	
	Active power total at the fundamental of the connected phases	Active power total (34)	
	Active power total at the fundamental of the connected phases	Reactive power L1 (35) / L2 (36) / L3 (37)	
	Reactive power total at the fundamental of the	Reactive power total (38)	

Name	Description / data width	Options[1)]	Default
	connected phases		
	Apparent power at the fundamental	Apparent power L1 (39) / L2 (40) / L3 (41)	
	Apparent power total at the fundamental of the connected phases	Apparent power total (42)	
	Received active energy	Received act. energy counter L1 (43) / L2 (44) / L3 (45)	
	Delivered active energy	Delivered act. energy counter L1 (46) /L2 (47) / L3 (48)	
	Works only with “Harmonic select “= 1	React. energy leading counter L1 (49) / L2 (50) / L3 (51)	
	Works only with “Harmonic select “= 1	React. energy lagging counter L1 (52) / L2 (53) / L3 (54)	
	Bit 0: 1 = Phase sequence L1-L2-L3 detected	Status (55)	
	Bit 1: 1 = Phase sequence L1-L3-L2 detected		
	Bit 2: 1 = Voltage at L1		
	Bit 3: 1 = Voltage at L2		
	Bit 4: 1 = Voltage at L3		
	The channel becomes enabled by parameterizing a measuring value	disabled (56)	disabled

[1)] Values in brackets for Modbus-TCP (firmware version 02.03.00 and higher), EtherCAT and EtherNet/IP via module parameter class.

Calculation of reactive power

$$Q = \sqrt{S^2 - P^2}$$

Calculation of current imbalance

$$Current\ Imbalance = \frac{\max\left(|I_{rms}L_1 - I_{rms}Average|, |I_{rms}L_2 - I_{rms}Average|, |I_{rms}L_3 - I_{rms}Average|\right)}{I_{rms}Average}$$

5.34.4 Diagnostic Data EP-1813

Name	Bytes	Bit	Description	Default
Error indicator	0	0	Module error	
		1	Internal error	
		2	External error	
		3	Channel error	
		4	Error	
		5	Power supply fault	
		6	Reserved	0
		7	Parameter error	
Module type	1	0	Module Type	0x05
		1		
		2		
		3		
		4	Channel information available	1
		5	Reserved	0
		6	Reserved	0
		7	Reserved	0
Error byte 2	2	0-7	Reserved	0
Error byte 3	3	0-2	Reserved	0
		3	Internal diagnostic FIFO full	
		4	Power supply fault	
		5	Reserved	0
		6	Process alarm lost	
		7	Reserved	0
Channel type	4	0-6	Channel type	0x75
		7	Reserved	0
Diagnostic bits per channel	5		Number of diagnostic bits per channel	8
Number of channels	6		Number of similar channels per module	3
Channel error	7	0	Error at channel 0	
		1	Error at channel 1	
		2	Error at channel 2	
		3	Error at channel 3	
		4-7	Reserved	0
Channel error	8	8-15	Reserved	0
Channel error	9	16-23	Reserved	0
Channel error	10	24-31	Reserved	0
Channel 0 error	11	0	Voltage overrange (300V + 10%)	
		1	Current overrange (I + 10%)	0
		2	Reserved	0
		3	Reserved	
		4	Reserved	
		5	Reserved	
		6	Reserved	
		7	Reserved	
Channel 1 error	12	0	Voltage overrange (300V + 10%)	
		1	Current overrange (I + 10%)	0

Name	Bytes	Bit	Description	Default
		2	Reserved	0
		3	Reserved	
		4	Reserved	
		5	Reserved	
		6	Reserved	
		7	Reserved	
Channel 2 error	13	0	Voltage overrange (300V + 10%)	
		1	Current overrange (I + 10%)	0
		2	Reserved	0
		3	Reserved	
		4	Reserved	
		5	Reserved	
		6	Reserved	
		7	Reserved	
Error in channel 3	14	0	Reserved	
		1	Reserved	0
		2	Reserved	0
		3	Reserved	
		4	Reserved	
		5	Reserved	
		6	Reserved	
		7	Reserved	
Channel 4 error to Channel 31 error	15-42	0-7	Reserved	0
Time stamp	43-46		Time stamp [µs] (32-bit)	

5.34.5 Process Data† Inputs EP-1813

Byte	Format	Description	Remarks
IB0	Word	CH0	Channel 0
IB1			
IB2	Word	CH1	Channel 1
IB3			
IB4	Word	CH2	Channel 2
IB5			
IB6	Word	CH3	Channel 3
IB7			
IB8	Word	CH4	Channel 4
IB9			
IB10	Word	CH5	Channel 5
IB11			

Byte	Format	Description	Remarks
IB12	Word	CH6	Channel 6
IB13			
IB14	Word	CH7	Channel 7
IB15			
† Internal process data mapping with data format Standard. Depending on the fieldbus specification and the data format of the communicating fieldbus components the bytes and/or words can be reversed during data transfer			

5.34.6 Process Data† Outputs EP-1813

Byte	Bit	Description	Value
QB0	QX0.0	Reset counter of received active energy	
	QX0.1	Reset counter of delivered active energy	
	QX0.2	Reset counter of capacitive energy	
	QX0.3	Reset counter of inductive reactive energy	
	QX0.4	Reserved	
	QX0.5	Reserved	
	QX0.6	Reserved	
	QX0.7	Reserved	
QB1		Key for counter reset	0xAF
QB2 ... QB15		Reserved	
† Internal process data mapping with data format Standard. Depending on the fieldbus specification and the data format of the communicating fieldbus components the bytes and/or words can be reversed during data transfer			

5.34.7 Process alarm† EP-1813

Name	Byte	Bit	Function
Alarm	0	0	Error at L1
		1	Error at L2
		2	Error at L3
		3	Voltage lower limit underrun
		4	Voltage upper limit exceeded
		5	Current lower limit underrun
		6	Current upper limit exceeded
		7	Power factor lower limit underrun
Alarm	1	0	Current unbalance
		1	Frequency lower limit underrun
		2	Frequency upper limit exceeded
		3 ... 7	Not used
Time stamp	2 ... 3		The two lowest bytes of the internal 32-bit timer
† Internal process data mapping with data format Standard. Depending on the fieldbus specification and the data format of the communicating fieldbus components the bytes and/or words can be reversed during data transfer			

5.34.8 Conversion of the adjustable measuring values EP-1813

Output/Limit	Value	Decimal (D)	Hexadecimal	Range	Conversion
RMS voltage L1 ... L3 (U) RMS voltage average (U) Harmonic voltage L1 ... L3 (U) Voltage lower/upper limit (U)	355.5 var	32767	0x7FFF	Overloading	
	300.0 var	27648	0x6C00	Nominal range	D = 27648 x U / 300 VRMS U = D x 300 VRMS / 27648
	150.0 var	13824	0x3600		
	0.0 var	0	0x0000		
[Current range = 1 A] RMS current L1 ... L2 (I) RMS current average (I) Harmonic current (I) Current lower/upper limit (I)	1.185 ARMS	32767	0x7FFF	Overloading	
	1 ARMS	27648	0x6C00	Nominal range	D = 27648 x I / 1.0 ARMS I = D x 1.0 ARMS / 27648
	0.5 ARMS	13824	0x3600		
	0 ARMS	0	0x0000		
[Current range = 5 A] RMS current L1 ... L2 (I) RMS current average (I) Harmonic current (I) Current lower/upper limit (I)	5.926 ARMS	32767	0x7FFF	Overloading	
	5 ARMS	27648	0x6C00	Nominal range	D = 27648 x I / 5.0 ARMS I = D x 5.0 ARMS / 27648
	2.5 ARMS	13824	0x3600		
	0 ARMS	0	0x0000		
[Current range = 1 A] Peak current (I) Peaks occurring within the crest factor can be measured up to 8 A/40 A. The total RMS is furthermore 1 A /5 A.	9.481 A	32767	0x7FFF	Overloading	
	8.0 A	27648	0x6C00	Nominal range	D = 27648 x I / 8.0 A I = D x 8.0 A/ 27648
	4.0 A	13824	0x3600		
	0.0 A	0	0x0000		
[Current range = 5 A] Peak current (I) Peaks occurring within the crest factor can be measured up to 8 A/40 A. The total RMS is furthermore 1 A /5 A.	47.406 A	32767	0x7FFF	Overloading	
	40.0 A	27648	0x6C00	Nominal range	D = 27648 x I / 40.0 A I = D x 40.0 A/ 27648
	20.0 A	13824	0x3600		
	0.0 A	0	0x0000		
Line frequency (f) Frequency alarm lower limit (f) Frequency alarm upper limit (f)	65 Hz	8320	0x2080	Nominal range	D = 128 x f [Hz] f = D / 128
	60 Hz	7680	0x1E00		
	50 Hz	6400	0x1900		
	45 Hz	5760	0x1680		
[Current range = 1 A] Active power L1 ... L3 (P) Harmonic active power L1 ... L3 (P)	355.5 W	32767	0x7FFF	Overloading	
	300.0 W	27648	0x6C00	Nominal range	D = 27648 x P / 300.0 W P = D x 300.0 W/ 27648
	150.0 W	13824	0x3600		
	0.0 W	0	0x0000		
[Current range = 5 A]	1777.7 var	32767	0x7FFF	Overloading	

Output/Limit	Value	Decimal (D)	Hexadecimal	Range	Conversion
Active power L1 ... L3 (P) Harmonic active power L1 ... L3 (P)	1500.0 var	27648	0x6C00	Nominal range	D = 27648 x Q / 1500.0 var Q = D x 1500.0 var / 27648
	750.0 var	13824	0x3600		
	0.0 var	0	0x0000		
[Current range = 1 A] Active power total (P)	1066.6 W	32767	0x7FFF	Overloading	
	900.0 W	27648	0x6C00	Nominal range	D = 27648 x P / 900.0 W P = D x 900.0 W / 27648
	450.0 W	13824	0x3600		
	0.0 W	0	0x0000		
[Current range = 5 A] Active power total (P)	5333.2 W	32767	0x7FFF	Overloading	
	4500.0 W	27648	0x6C00	Nominal range	D = 27648 x P / 4500.0 W P = D x 4500.0 W / 27648
	2250.0 W	13824	0x3600		
	0.0 W	0	0x0000		
[Current range = 1 A] Reactive power L1 ... L3(Q) Harmonic reactive power L1 ... L3(Q)	355.5 var	32767	0x7FFF	Overloading	
	300.0 var	27648	0x6C00	Nominal range	D = 27648 x Q / 300.0 var Q = D x 300.0 var / 27648
	150.0 var	13824	0x3600		
	0.0 var	0	0x0000		
[Current range = 5 A] Reactive power L1 ... L3(Q) Harmonic reactive power L1 ... L3(Q)	1777.7 var	32767	0x7FFF	Overloading	
	1500.0 var	27648	0x6C00	Nominal range	D = 27648 x Q / 1500.0 var Q = D x 1500.0 var / 27648
	750.0 var	13824	0x3600		
	0.0 var	0	0x0000		
[Current range = 1 A] Reactive power total (Q)	1066.6 var	32767	0x7FFF	Overloading	
	900.0 var	27648	0x6C00	Nominal range	D = 27648 x Q / 900.0 var Q = D x 900.0 var / 27648
	450.0 var	13824	0x3600		
	0.0 var	0	0x0000		
[Current range = 5 A] Reactive power total (Q)	5333.2 var	32767	0x7FFF	Overloading	
	4500.0 var	27648	0x6C00	Nominal range	D = 27648 x Q / 4500.0 var Q = D x 4500.0 var / 27648
	2250.0 var	13824	0x3600		
	0.0 var	0	0x0000		
[Current range = 1 A] Apparent power L1 ... L3 (S) Harmonic apparent power L1 ... L3 (S)	355.5 var	32767	0x7FFF	Overloading	
	300.0 var	27648	0x6C00	Nominal range	D = 27648 x Q / 300.0 var Q = D x 300.0 var / 27648
	150.0 var	13824	0x3600		
	0.0 var	0	0x0000		
[Current range = 5 A] Apparent power L1 ... L3 (S) Harmonic apparent power L1 ... L3 (S)	1777.7 var	32767	0x7FFF	Overloading	
	1500.0 var	27648	0x6C00	Nominal range	D = 27648 x Q / 1500.0 var Q = D x 1500.0 var / 27648
	750.0 var	13824	0x3600		
	0.0 var	0	0x0000		
[Current range = 1 A] Apparent power total (S)	1066.6 var	32767	0x7FFF	Overloading	
	900.0 var	27648	0x6C00	Nominal range	D = 27648 x Q / 900.0 var Q = D x 900.0 var / 27648
	450.0 var	13824	0x3600		
	0.0 var	0	0x0000		
[Current range = 5 A] Apparent power total (S)	5333.2 VA	32767	0x7FFF	Overloading	D = 27648 x S / 4500.0 VA S = D x 4500.0 VA/ 27648
	4500.0 VA	27648	0x6C00	Nominal range	
	2250.0 VA	13824	0x3600		

Output/Limit	Value	Decimal (D)	Hexadecimal	Range	Conversion
	0.0 VA	0	0x0000		
Power factor (PF) Unsigned absolute value; the sign can be getting from the harmonic power.	1.000	16383	0x3FFF	Nominal range	D = 16383 x PF PF = D / 16383
	0.750	12287	0x2FFF		
	0.500	8191	0x1FFF		
	0.000	0	0x0000		
Current imbalance alarm limit (CI)	1.000	16383	0x3FFF	Nominal range	D = 16383 x PF PF = D / 16383
	0.750	12287	0x2FFF		
	0.500	8191	0x1FFF		
	0.000	0	0x0000		
Received active energy counter (E)	32766 Wh	32766	0x7FFE	Overflow	D = 1 x E /Wh E = D * 1 Wh
	10000 Wh	10000	0x2710	Nominal range	
	1000 Wh	1000	0x03E8		
	1 Wh	1	0x0001	Overflow	D = 1 x E /Wh E = D * 1 Wh
Delivered active energy counter (E)	32766 Wh	32766	0x7FFE	Nominal range	
	10000 Wh	10000	0x2710		
	1000 Wh	1000	0x03E8		
	1 Wh	1	0x0001		
Reactive energy leading counter (E)	32766 Wh	32766	0x7FFE	Overflow	D = 1 x E /Wh E = D * 1 Wh
	10000 Wh	10000	0x2710	Nominal range	
	1000 Wh	1000	0x03E8		
	1 Wh	1	0x0001		
Reactive energy lagging counter (E)	32766 Wh	32766	0x7FFE	Overflow	D = 1 x E /Wh E = D * 1 Wh
	10000 Wh	10000	0x2710	Nominal range	
	1000 Wh	1000	0x03E8		
	1 Wh	1	0x0001		

5.34.9 Raw parameter data for acyclic services (not relevant with MODBUS application)

Byte	Bit	Description	Default
0	0	Current imbalance alarm limit	0x0
	1	Voltage alarm lower limit enable	
	2	Voltage alarm upper limit enable	
	3	Reserved	
	4	Current alarm lower limit enable	
	5	Current alarm upper limit enable	
	6	Frequency alarm lower limit enable	
	7	Frequency alarm upper limit enable	
1	0	Reserved	0x0
	1	Current range 1/5 A enabled	
	2	Reserved	
	3	Reserved	

Byte	Bit	Description	Default
	4	Reserved	
	5	Power factor alarm lower limit	
	6	Reserved	
	7	Diagnostic alarm enabled	
2	0 ... 7	Harmonic select	0x1
3	0 ... 7	Power factor lower limit High Byte	0x0
4	0 ... 7	Power factor lower limit Low Byte	0x0
5	0 ... 7	Current imbalance alarm limit High Byte	0x3F
6	0 ... 7	Current imbalance alarm limit Low Byte	0xFF
7	0 ... 7	Voltage alarm lower limit High Byte	0x0
8	0 ... 7	Voltage alarm lower limit Low Byte	0x0
9	0 ... 7	Voltage alarm upper limit High Byte	0x6c
10	0 ... 7	Voltage alarm upper limit Low Byte	0x0
11	0 ... 7	Current alarm lower limit High Byte	0x0
12	0 ... 7	Current alarm lower limit Low Byte	0x0
13	0 ... 7	Current alarm upper limit High Byte	0x6c
14	0 ... 7	Current alarm upper limit Low Byte	0x0
15	0 ... 7	Frequency alarm lower limit High Byte	0x16
16	0 ... 7	Frequency alarm lower limit Low Byte	0x80
17	0 ... 7	Frequency alarm upper limit High Byte	0x20
18	0 ... 7	Frequency alarm upper limit Low Byte	0x80
19	0 ... 7	Measured value Channel 0	0xFF
20	0 ... 7	Measured value Channel 1	0xFF
21	0 ... 7	Measured value Channel 2	0xFF
22	0 ... 7	Measured value Channel 3	0xFF
23	0 ... 7	Measured value Channel 4	0xFF
24	0 ... 7	Measured value Channel 5	0xFF
25	0 ... 7	Measured value Channel 6	0xFF
26	0 ... 7	Measured value Channel 7	0xFF

Fieldbus specific notes for parameterizing

Profinet: The parameter block can be written on Index 125 of the module using a Write Record access (SFB53). A 4-byte header must be prepended to the parameter data: 0x1F, 0x00, 0x04, 0x18.

Profibus: The parameter block can be written on Index 125 of the module using a Write Record access (SFB53). No header is required.

EtherNet/IP: The parameter block can be written on class 0x65, instance = slot number, attribute 0x73 using a writing accesses. No header is required. The parameter block can also be transferred as part of the configuration assembly.

Typical frequency curve for current and voltage measurements

Figure 208: Typical frequency curve for current and voltage measurement

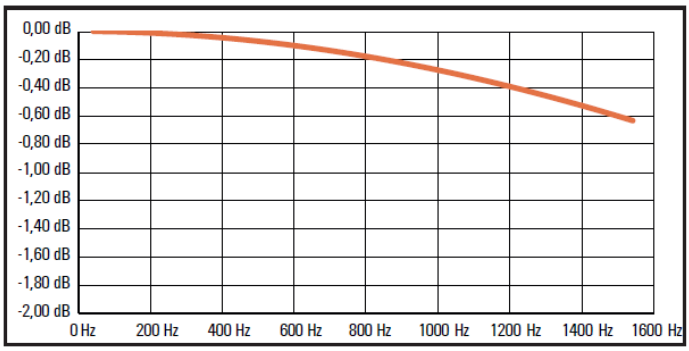

5.35 Power-feed Module for Input Current Path EP-7631

Figure 209: Power-feed Module for Input Current Path EP-7631

Figure 210: Connection Diagram EP-7631

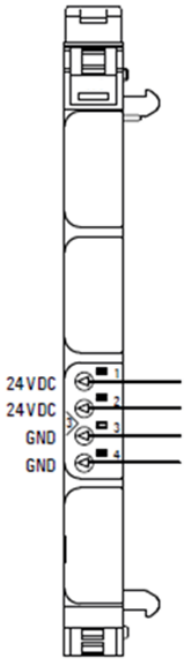

Power-feed modules are used to refresh the current paths and isolate the power supply. The main power supply of the RSTi-EP station is always fed in via the network adapter. A power-feed module EP-7631 must be connected if the current demand of the series of input modules is too large.

The maximum feed-in current in the input current path via the 4-pole connector is 10 A. Details required to calculate current demand and power supply are presented in Section, Current Demand and Power Supply. Power-feed modules are passive modules without fieldbus communication, therefore they are not considered during configuration.

Note: A maximum of three passive modules (power-feed module, potential distribution module, empty slot module) may be installed in succession, however the next module to be installed must be an active module.

⚠CAUTION

In the case of a maximum power supply of >8 A and a maximum temperature of > +55°C (131 °F), all four contacts must be connected with 1.5 mm² wiring.

5.35.1 LED Indicators EP-7631

	Module Status	**Green:** Voltage applied and is > 18Vdc
	3.1	**Green:** Supply voltage for input current path > 18Vdc
	3.2	**Red:** Supply voltage for input current path < 18Vdc
	3.3	--
	3.4	**Red:** Internal fuse defective, replace module

For error messages refer to Section 12: LED Indicators and Troubleshooting.

Figure 211: Block Diagram EP-7631

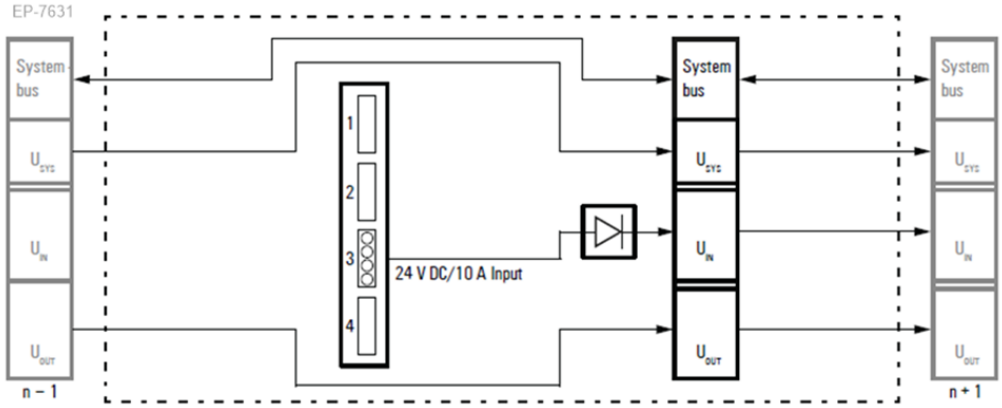

5.35.2 Specifications EP-7631

Specifications	Description
Supply	
Supply voltage	20.4V – 28.8V
Maximum feed current for input modules	10 A
Current consumption from input current path IIN	10 mA
General data	
Weight	76 g (6.21 oz)
For additional general data, refer to Section, General Technical Data for I/O Modules.	

5.36 Power-feed Module for Output Current Path EP-7641

Figure 212: Power-feed Module for Output Current Path EP-7641

Figure 213: Connection Diagram EP-7641

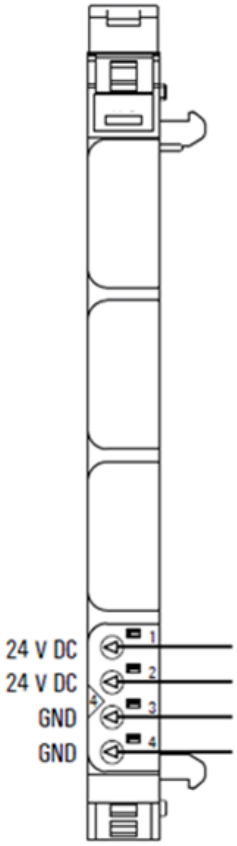

Power-feed modules are used to refresh the current paths and isolate the power supply. The main power supply of the RSTi-EP station is always fed in via the network adapter. A power-feed module EP-7641 must be connected if the current demand of the series of output modules is too large.

The maximum feed-in current in the output current path via the 4-pole connector is 10 A. Details required to calculate current demand and power supply are presented in Section, Current Demand and Power Supply.

Power-feed modules are passive modules without fieldbus communication, therefore they are not considered during configuration.

Note: A maximum of three passive modules (power-feed module, potential distribution module, empty slot module) may be installed in succession, however the next module to be installed must be an active module.

⚠CAUTION

In the case of a maximum power supply of >8 A and a maximum temperature of > +55°C (131 °F), all four contacts must be connected with 1.5 mm² wiring.

5.36.1 LED Indicators EP-7641

Module Status	**Green:** Voltage applied and is > 18Vdc
4.1	**Green:** Supply voltage for input current path > 18Vdc
4.2	**Red:** Supply voltage for input current path < 18Vdc
4.3	--
4.4	**Red:** Internal fuse defective, replace module

For error messages refer to Section 12:, LED Indicators and Troubleshooting.

Figure 214: Block Diagram EP-7641

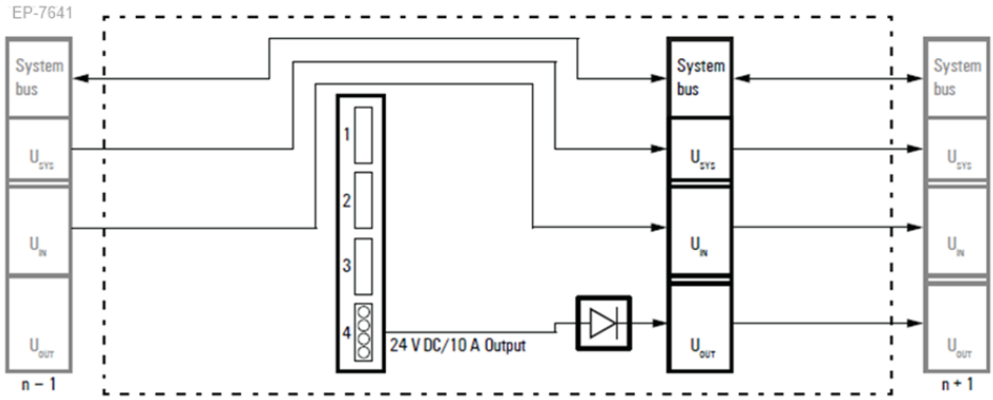

5.36.2 Specifications EP-7641

Specifications	Description
Supply	
Supply voltage	20.4V – 28.8V
Maximum feed current for input modules	10 A
Current consumption from output current path IOUT	10 mA
General data	
Weight	76 g (2.68 oz)
General data: refer to Section, General Technical Data for the Fieldbus Network Adapter	

5.37 Safe Feed-in Modules EP-1901, EP-1902, and EP-1922

Figure 215: Safe Feed-in Module EP-1901

Figure 216: Safe Feed-in Module EP-1902

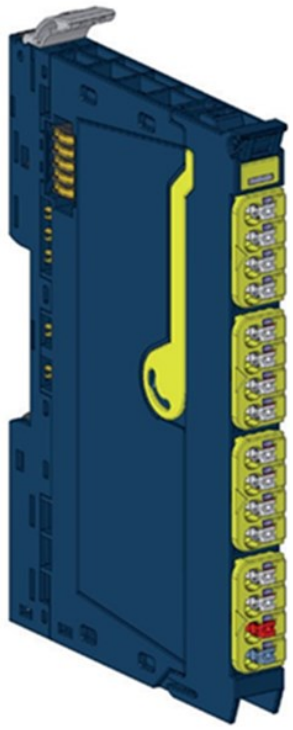

Figure 217: Safe Feed-in Module EP-1922

Emerson provides three variants of RSTi-EP safe feed modules EP 1901: one safe input, EP 1902: two safe inputs and EP 1922: two safe inputs, with delayed disconnection, which are intended for connecting safety-related equipment. The RSTi-EP safe feed-input modules are controlled using contact-based safety transducers and/or safety transducers with OSSD (Output Signal Switching Device) inputs. The safety function consists of the safe disconnection of 24 V outputs, the safe state of which is 24 V switched off (current path for outputs and the OSSD output is switched off).

All input sensors are independently supplied via separate voltage paths and report the current machine status to the control unit.

Each RSTi-EP safe feed-input module safely switches off all following modules that are supplied by the output current path (until the next EP-7641 power module) and thus creates a safety segment. To switch the 24 V OSSD voltage back on, either an automatic or a manual start can be selected.

- Automatic start: the safe output current path is switched on immediately after resetting the safety circuit(s).

- Manual start: the output current path is only switched on again if the start button has been held down for a preset length of time.

With the delay module (EP-1922), switching off can be delayed by a defined time so that, for example, a machine can be shut down in a controlled manner. The delay time can be set in four steps between 0 and 60 seconds (corresponds to stop category 1 as per EN 60204.

Note: All product-specific information and notes on the use of EP-19xx modules can be found in the Modules for Functional Safety Manual (GFK-2956).

5.38 Potential Distribution Module for Input Current Path EP-711F

Figure 218: Power-feed Module for Output Current Path EP-711

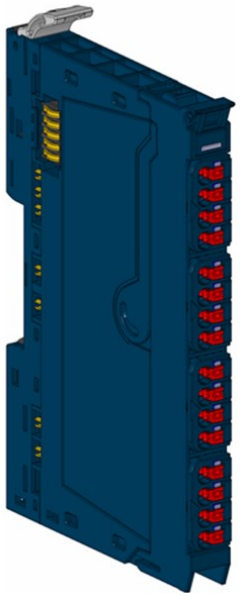

Figure 219: Connection Diagram EP-711F

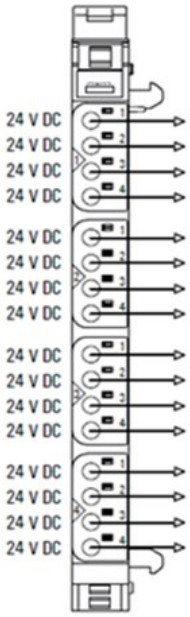

The potential distribution module EP-711F provides 16 connections for +24 V from the input current path. Potential distribution modules are passive modules without fieldbus communication, therefore they are not considered during configuration.

Note: A maximum of three passive modules (power-feed module, potential distribution module, and empty slot module) may be installed in succession, however the next module to be installed must be an active module.

Figure 220: Block Diagram EP-711F

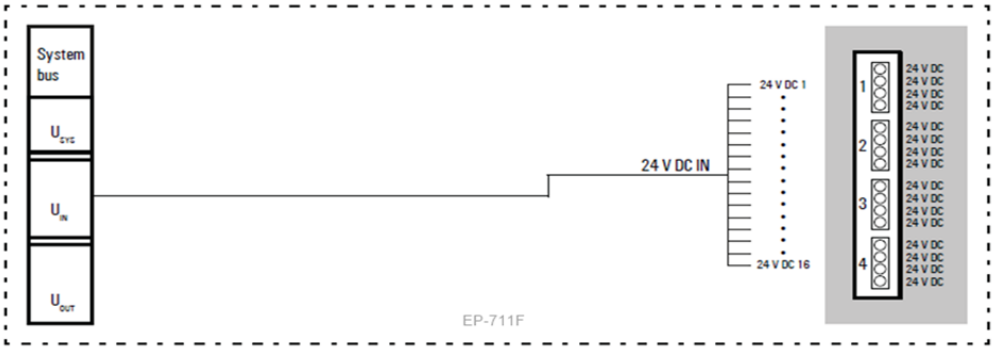

5.38.1 Specifications EP-711F

Specifications	Description
Supply	
Supply voltage	20.4V – 28.8V
General data	
Weight	84 g (2.96 oz)
For additional general data, refer to Section, General Technical Data for I/O Modules.	

5.39 Potential Distribution Module for Output Current Path EP-751F

Figure 221: Potential Distribution Module for Output Current Path EP-751F

Figure 222: Connection Diagram EP-751F

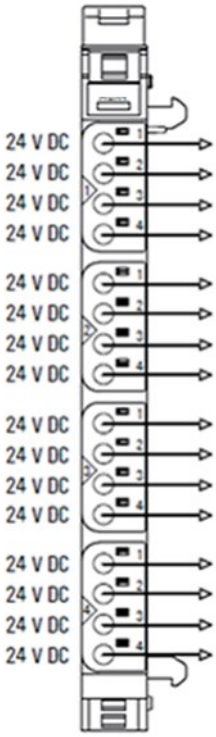

The potential distribution module EP-751F provides 16 connections for +24 V from the output current path. Potential distribution modules are passive modules without fieldbus communication, therefore they are not considered during configuration.

Note: A maximum of three passive modules (power-feed module, potential distribution module, and empty slot module) may be installed in succession, however the next module to be installed must be an active module.

Figure 223: Block Diagram EP-751F

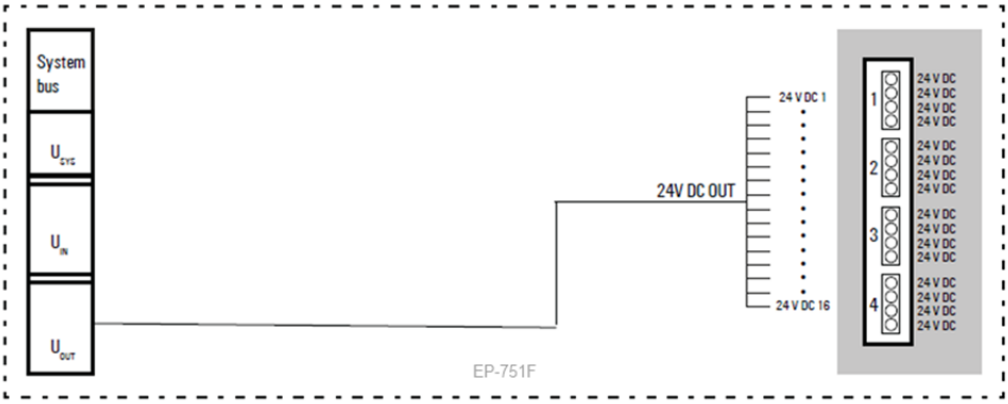

5.39.1 Specifications EP-751F

Specifications	Description
Supply	
Supply voltage	20.4V – 28.8V
General data	
Weight	84 g (2.96 oz)
For additional general data, refer to Section, General Technical Data for I/O Modules.	

5.40 Potential Distribution Module for Functional Earth EP-700F

Figure 224: Potential Distribution Module for Output Current Path EP-700F

Figure 225: Connection Diagram EP-700F

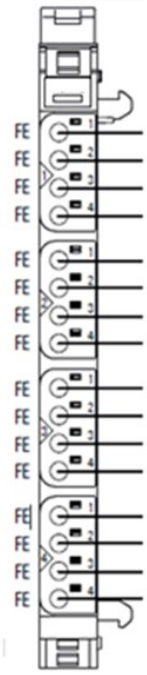

The potential distribution module EP-700F provides 16 connections for the functional earth. Potential distribution modules are passive modules without fieldbus communication, therefore they are not considered during configuration.

Note: *A maximum of three passive modules (power-feed module, potential distribution module, and empty slot module) may be installed in succession, however the next module to be installed must be an active module.*

Figure 226: Block Diagram EP-700F

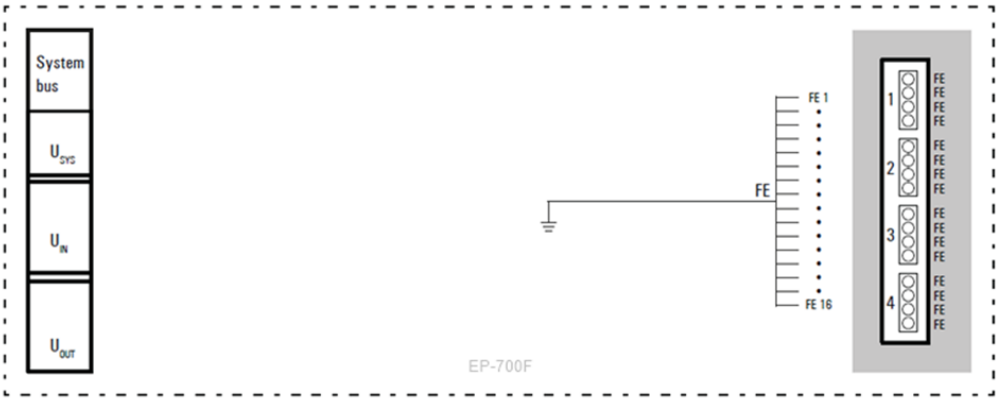

5.40.1 Specifications EP-700F

Specifications	Description
Supply	
Supply voltage	20.4V – 28.8V
General data	
Weight	84 g (2.96 oz)
For additional general data, refer to Section, General Technical Data for I/O Modules.	

5.41 0-V Potential Distribution Module for Input Current Path EP-710F

Figure 227: 0V Potential Distribution Module for the Input Current path EP-710F

Figure 228: Connection Diagram EP-710F

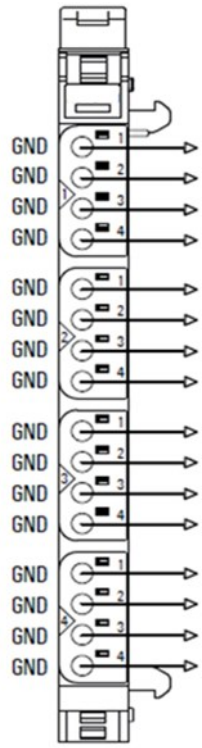

The potential distribution module EP-710F provides 16 connections for ground from the input current path. Potential distribution modules are passive modules without fieldbus communication, therefore they are not considered during configuration.

Note: A maximum of three passive modules (power-feed module, potential distribution module, and empty slot module) may be installed in succession, however the next module to be installed must be an active module.

Figure 229: Block Diagram EP-710F

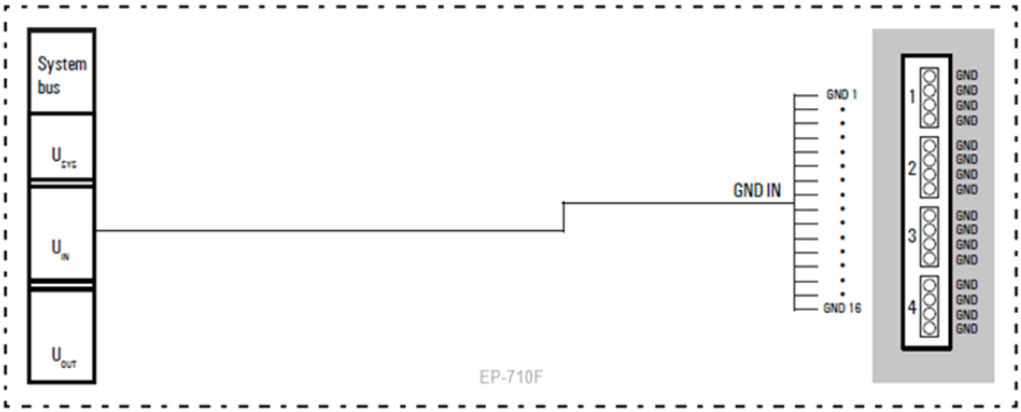

5.41.1 Specifications EP-710F

Specifications	Description
Supply	
Supply voltage	0 V (from input current path)
General data	
Weight	84 g (2.96 oz)
For additional general data, refer to Section, General Technical Data for I/O Modules.	

5.42 0-V Potential Distribution Module for Output Current Path EP-750F

Figure 230: 0V Potential Distribution Module for the Output Current Path EP-750F

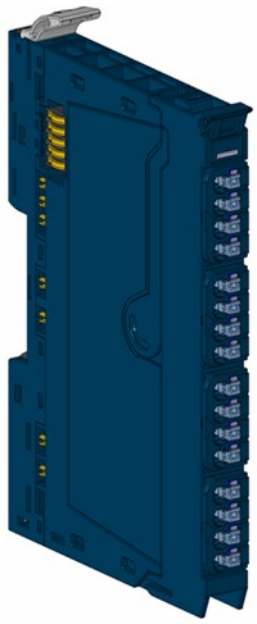

Figure 231: Connection Diagram EP-750F

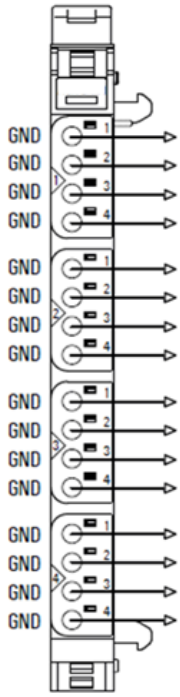

The potential distribution module EP-750F provides 16 connections for ground from the output current path. Potential distribution modules are passive modules without fieldbus communication, therefore they are not considered during configuration.

Note: A maximum of three passive modules (power-feed module, potential distribution module, and empty slot module) may be installed in succession, however the next module to be installed must be an active module.

Figure 232: Block Diagram EP-750F

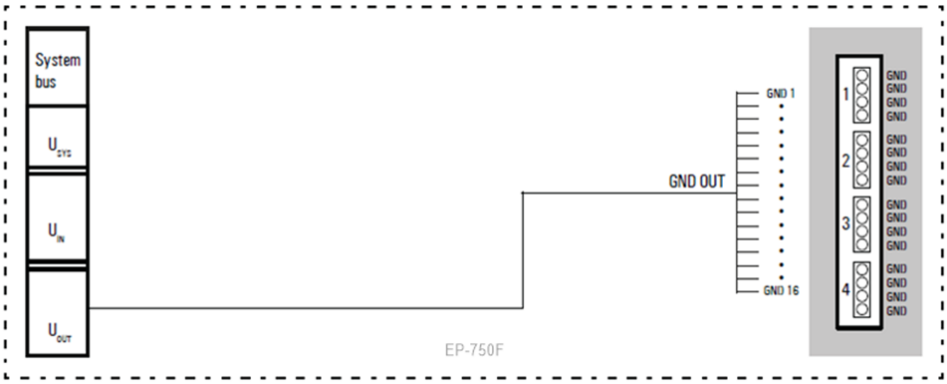

5.42.1 Specifications EP-750F

Specifications	Description
Supply	
Supply voltage	0 V (from output current path)
General data	
Weight	84 g (2.96 oz)
For additional general data, refer to Section, General Technical Data for I/O Modules.	

5.43 Empty Slot Module EP-8310

Figure 233: Empty Slot Module EP-8310

Empty slot modules can be integrated as reserve modules in a station. They bridge all contacts in the basic module 1:1 and otherwise have no function. Empty slot modules are passive modules without fieldbus communication, therefore they are not considered during configuration.

Note: A maximum of three passive modules (power-feed module, potential distribution module, and empty slot module) may be installed in succession, however the next module to be installed must be an active module.

5.43.1 Specifications EP-8310

General data	
Weight	70 g (2.47 oz)
For additional general data, refer to Section, General Technical Data for I/O Modules.	

5.44 Termination Kit EP-8301

Figure 234: Termination Kit EP-8301

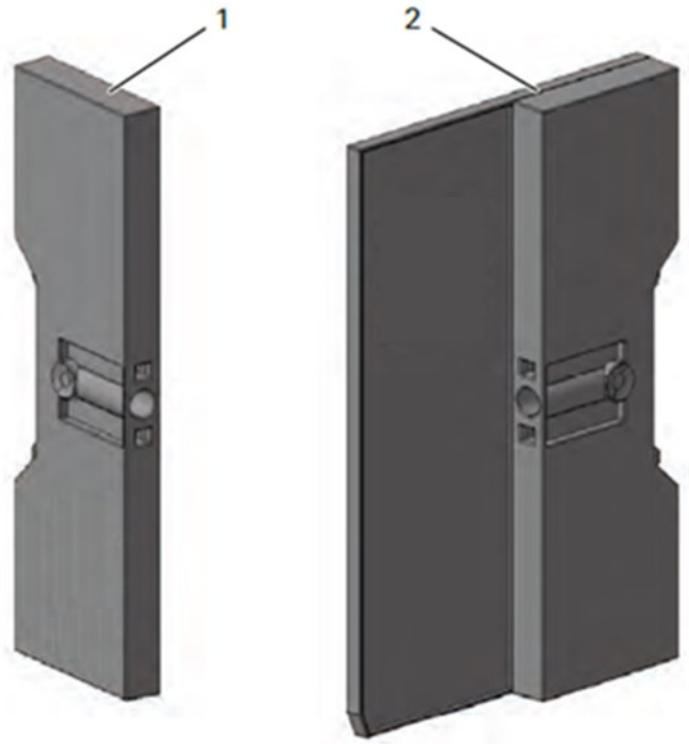

Each RSTI-EP fieldbus network adapter is delivered together with a termination kit EP-8301. This comprises two end brackets and an end plate. The end plate protects the contacts on the last module at the end of the RSTI-EP station. The station is fixed to the DIN rail on both sides via the end brackets.

5.44.1 Specifications EP-8301

General data	
Weight	51 g (1.8 oz)

Section 6: Installation

⚠ WARNING

Explosion risk - During assembly work, sparks can form and surfaces may become excessively hot.

- Before assembly, make sure that there is not a potentially explosive atmosphere.
- For applications in potentially explosive atmospheres, observe the installation and construction requirements of EN 60079- 15 and/or country-specific regulations

⚠ DANGER

Dangerous contact voltage:

- Carry out assembly and wiring work on the RSTi-EP station only when the power supply is disconnected.
- Make sure that the place of installation (switch cabinet etc.) has been disconnected from the power supply.

6.1 Preparations for Assembly

The RSTi-EP station is designed for installation in switch cabinets, terminals or switch boxes in decentralized systems. The field-bus network adapter and I/O modules conform to protection class IP20.

6.1.1 Environmental Conditions

Make sure that the permitted environmental conditions for installation and operation are observed (refer to the General Technical Data in Section, General Technical Data for the Fieldbus Network Adapter and to Section, General Technical Data for I/O Modules.

6.1.2 DIN Rail

The RSTi-EP system products are intended for installation on a DIN rail in accordance with EN 60715 [35 × 7.5mm (1.4” x 0.3”)], steel strip in accordance with Annex A of EN 60715, or tinplated steel strip. The DIN rail must be mounted prior to the installation of the RSTi-EP station.

The DIN rail must be attached to the surface at least every 20 cm (7.9 in) to protect it from vibration and impact.

If the DIN rail is installed on earthed mounting plates, it does not have to be separately earthed.

6.1.3 Stripping Lengths

The required stripping length for every RSTi-EP product is specified in mm (in). These lengths, such as 6 mm (0.24 in) ± 0.5 mm (0.02 in), ≥ 10 mm (0.39 in) ±1 mm (0.04 in), must be observed. This also applies to the use of wire-end ferrules. The external dimensions of the crimped wire-end ferrules must conform with IEC−60947-1. For detailed information refer to Section, Wiring.

6.1.4 Unpacking and Delivery

All of the elements that make up the RSTi-EP station are packaged individually for delivery.

- Check the delivery for completeness and transport damage.
- Report any transport damage immediately to the respective transport company.

⚠CAUTION

- The product can be destroyed by electrostatic discharge.
- The components in the RSTi-EP series can be destroyed by electrostatic discharge.
- Ensure that personnel and work equipment are adequately grounded.

- Unpack all parts and sort the modules into the installation sequence as per the instructions.
- Dispose of all packaging in accordance with the local disposal guidelines. The cardboard packaging from the modules and fieldbus network adapters can be sent for paper recycling.

6.1.5 Use in a Potentially Explosive Atmosphere

If the RSTi-EP station is used in a potentially explosive atmosphere rated as Zone 2, the housing must meet the requirements of explosion protection type Ex n or Ex e and protection class IP54. Sensors and actuators that are in Zone 2 or in a safe zone can be connected. All cable glands on the housing must be approved for Example.

Figure 235: Use in Potentially Explosive Atmosphere

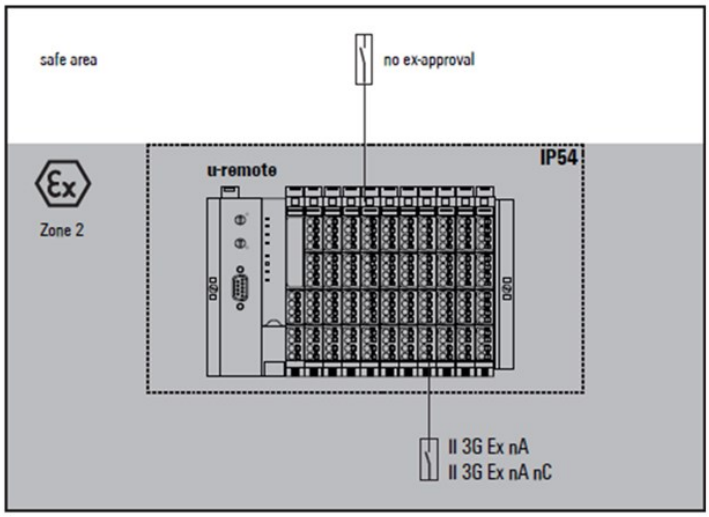

6.1.6 Installation Orientation

The RSTi-EP station is usually installed on a horizontally positioned DIN rail.

Figure 236: Installation Position of the RSTi-EP Station on the DIN Rail (Horizontal Installation)

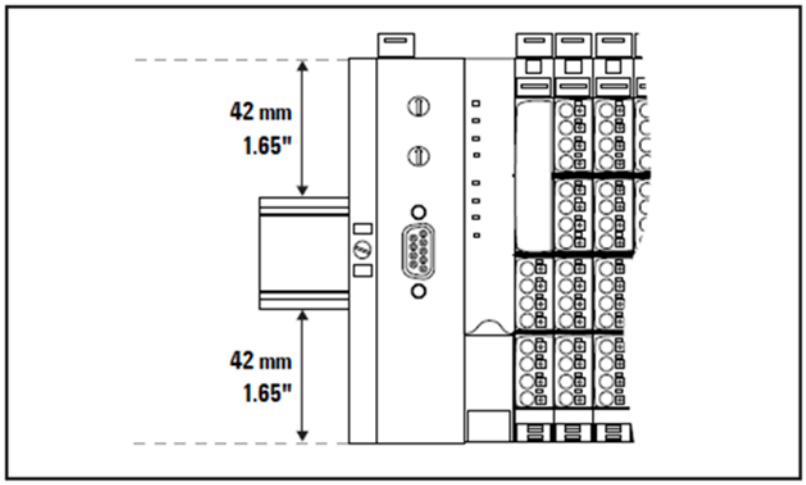

Installation on vertically positioned DIN rails is also possible. In this event, however, the heat dissipation is reduced such that the derating values change (refer to Section, Current Demand and Power Supply).

In the case of vertical mounting, the field-bus network adapter must always be arranged as the first module at the bottom and secured with a reinforced end bracket for vertical mounting.

6.1.7 Clearances

Note: Depending on how the station shielding is implemented, the specified distances may have to be larger than those given below.
Ensure compliance with the minimum permissible cable bending radius.

In order to carry out the installation and further maintenance work and to ensure enough ventilation, the RSTi-EP station must be installed while observing the following Clearances. Earth terminals already installed can be ignored when calculating the distance.

Figure 237: Clearances with Horizontal Installation

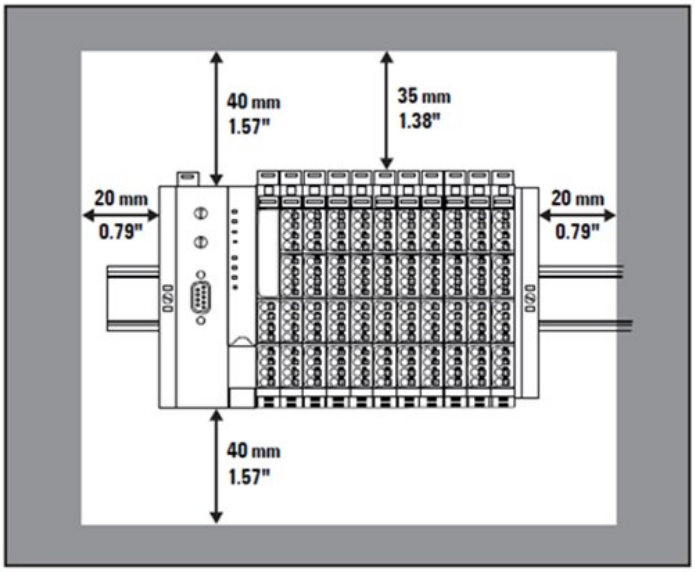

Figure 238: Clearances with Vertical Installation

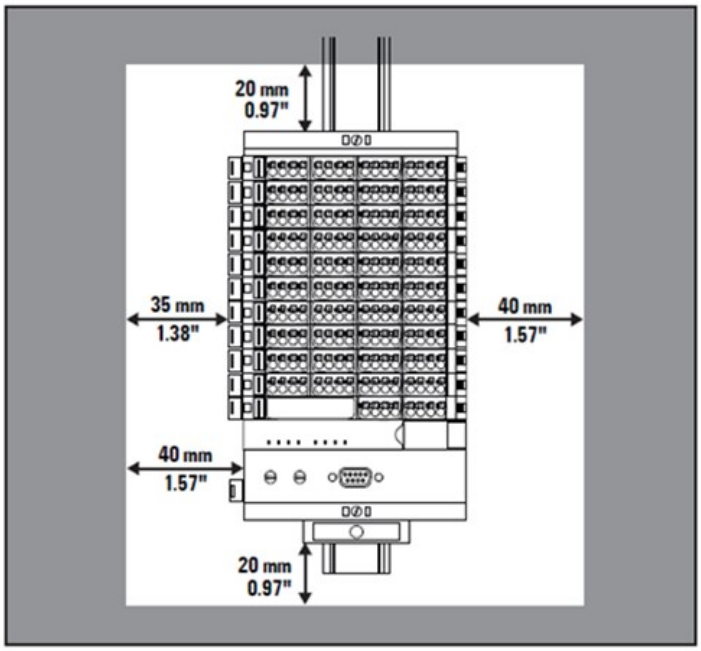

Figure 239: Minimum Distance to Switch Cabinet Door (with/without Swivel Marker)

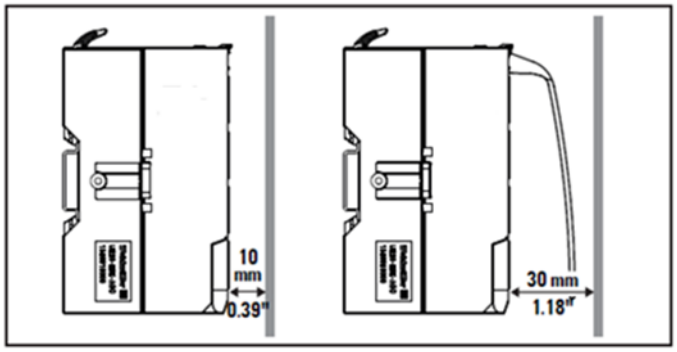

6.1.8 Calculation of Space Requirements

The space requirements for a RSTi-EP station with n modules (**horizontal installation**) is calculated as follows:

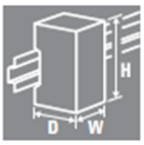

Height:	120 mm (4.72”)	
	+ 2 x 40 mm (1.57”)	distances at top and bottom
	= **200 mm (7.87”)**	
Width:	8 mm (1.57”)	end bracket

	+ 52 mm (2.05”)	bus network adapter
	+ n x 11.5 mm (0.45”)	n modules
	+ 11.5 mm (0.45”)	end plate and end bracket
	+ 2 x 20 mm (0.79”)	distances to the sides
	= 111.5 mm (4.39”) + n x 11.5 mm (0.45”)	

For vertical installation interchange height and width. When calculating the width for vertical installation, 4.5 mm (0.18”) must be added for the end bracket.

6.1.9 Installation Sequence

A RSTi-EP station may only be installed in this sequence (starting from the left/bottom):

- End bracket
- Bus network adapter
- Up to 64 active modules
- End plate and end bracket

If the station has already been configured, proceed to the corresponding installation drawing. If you are configuring the station yourself, observe the following instructions:

- Observe the maximum current carrying capacity (refer to Section, Current Demand and Power Supply).
- Furthermore, the modules may be arranged in any sequence. In order to configure the station as clearly as possible, it is recommended to arrange the modules according to their function.

6.1.10 Arrangement of SIL Modules

An EP-19xx module can be positioned anywhere in the RSTi-EP station. All of the following output modules up to the next EP-7641 module are safely disconnected (safety segment). Multiple EP-19xx modules / safety segments can be set up in a single station.

Note: When using RSTi-EP EP-19xx modules, also refer to the Modules for Functional Safety Manual (GFK-2956).

6.1.11 Preparation and the Required Tool

The DIN rail must already be installed. To mechanically install the RSTi-EP station, you will need a 3-mm screwdriver.

- Lay out the modules in the intended sequence.
- Check whether the DIN rail feet can be moved on both end brackets. If necessary, loosen the mounting screw until the DIN rail feet can be moved freely.
- If not done yet, fit an earth terminal to the DIN rail.

6.2 Assembling the RSTi-EP Station

⚠ WARNING

Explosion risk - During assembly work, sparks can form, and surfaces may become excessively hot.

- Before assembly, make sure that there is not a potentially explosive atmosphere.
- For applications in potentially explosive atmospheres, observe the installation and construction requirements of EN 60079- 15 and/or country-specific regulations

⚠ DANGER

Dangerous contact voltage:

- Carry out assembly and wiring work on the RSTi-EP station only when the power supply is disconnected.
- Make sure that the place of installation (switch cabinet etc.) has been disconnected from the power supply.

⚠ CAUTION

The product can be destroyed by electrostatic discharge.

- The components in the RSTi-EP series can be destroyed by electrostatic discharge.
- Ensure that personnel and work equipment are adequately grounded.

Note: For failure-free operation, the end brackets delivered with the network adapter must be installed to achieve a permanent set of the RSTi-EP station.

1. On the left side of the installation site, place an end bracket on the DIN rail with the exterior of the bracket facing left and screw it down tightly (using a 3-mm (0.1”) screwdriver).

Figure 240: Attaching the End Bracket

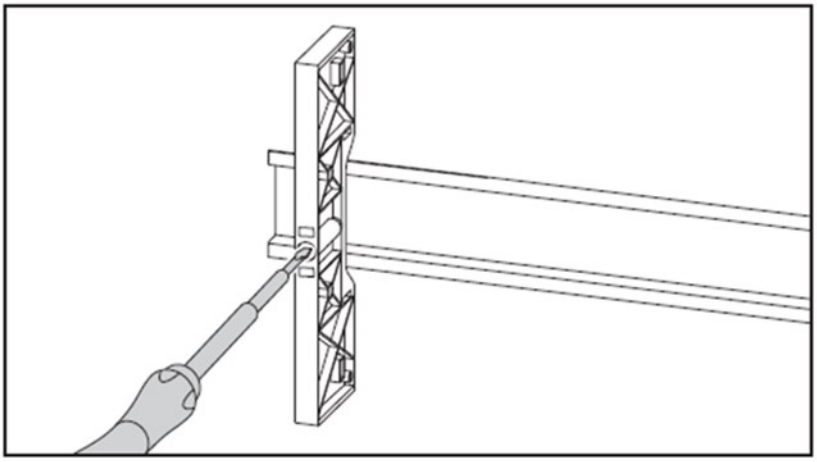

Note: When installing the RSTi-EP products, make sure that you listen for the double click:

When snapping onto the DIN rail

When pushing together with the neighboring module.

The modules are in the correct position and the connection is made only when both snapping noises are heard.

⚠CAUTION

- Improper installation may prevent grounding.
- The grounding of the modules and network adapters is only ensured if the FE spring at the bottom is in contact with the DIN rail.
- During installation, make sure that both release levers on the bus network adapter and all release levers on the modules are closed before snapping onto the DIN rail.

Figure 241: Release Lever Closed

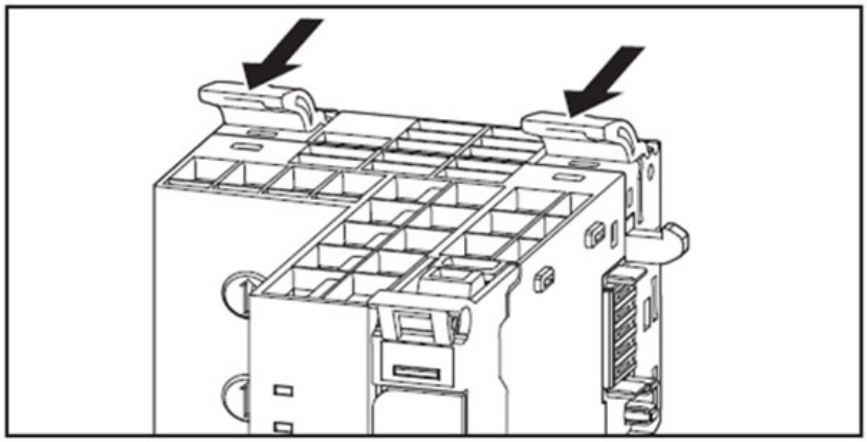

2. Place the field bus network adapter (module side to the right) on the DIN rail so that it audibly clicks into place.

Figure 242: Attaching the Bus Network Adapter to the DIN Rail

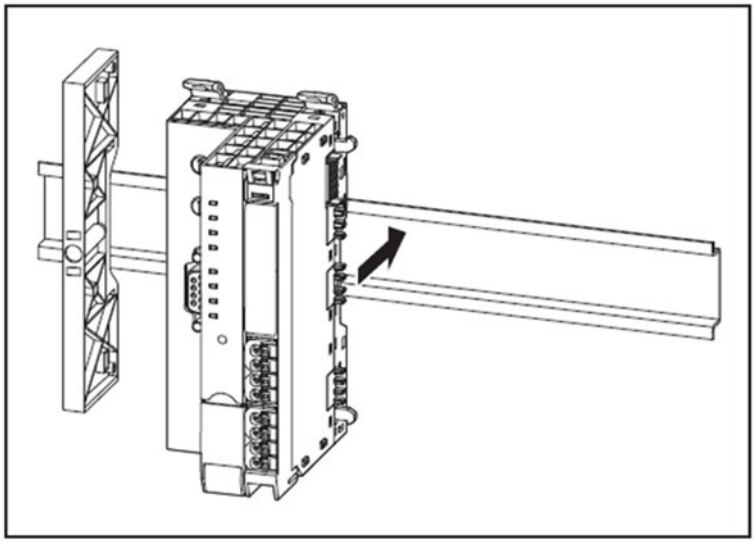

3. Slide the bus network adapter to the left until it completely connects with the end bracket. At the same time, press the bus network adapter as close as possible to the DIN rail so that the network adapter is not tilted.

Figure 243: Sliding the Bus Network Adapter into Position

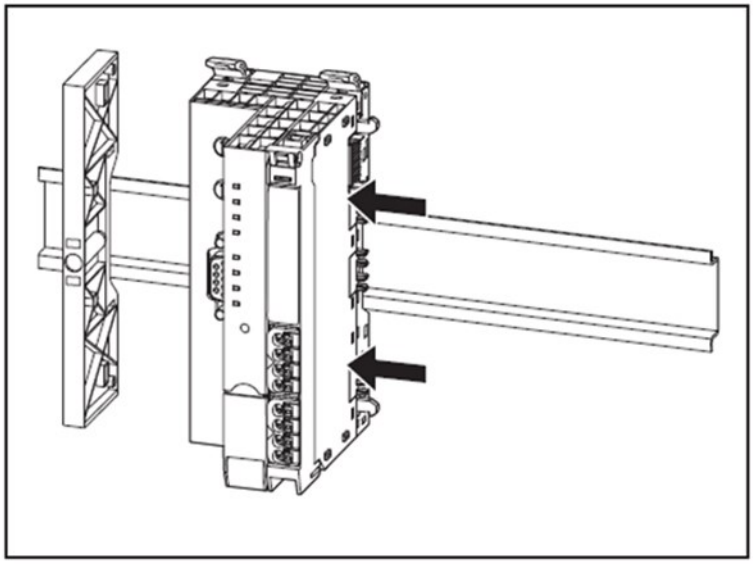

4. Place the first module on the DIN rail and press it down firmly. It must audibly click into place.
5. Slide the module to the left until it audibly clicks into place on the bus network adapter. At the same time, press the module as close as possible to the DIN rail so that the module is not tilted.

Figure 244: Sliding the Module into Position

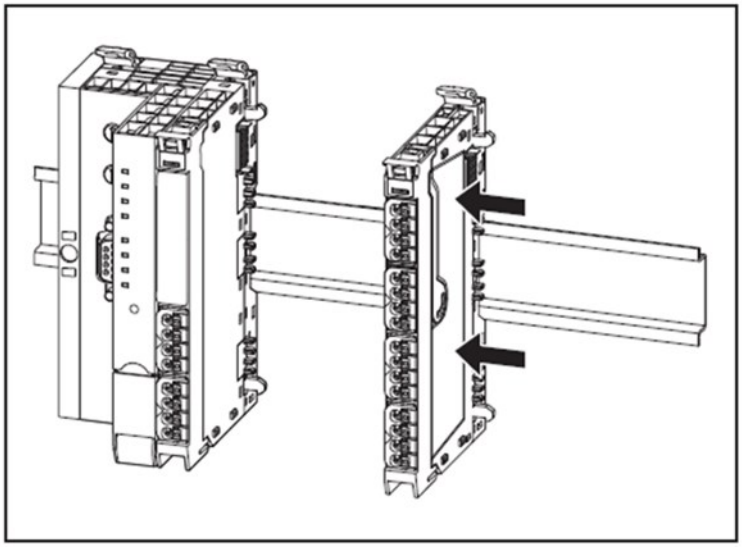

6. Attach all the other modules as described above.
7. Connect the second end bracket to the end plate as specified by the alignment pins.
8. Place both parts on the DIN rail on the right-hand side of the station so that the end bracket faces outwards.
9. Slide the end bracket and end plate to the left until it completely connects with the last module.

Figure 245: Sliding the End Plate with End Bracket into Position

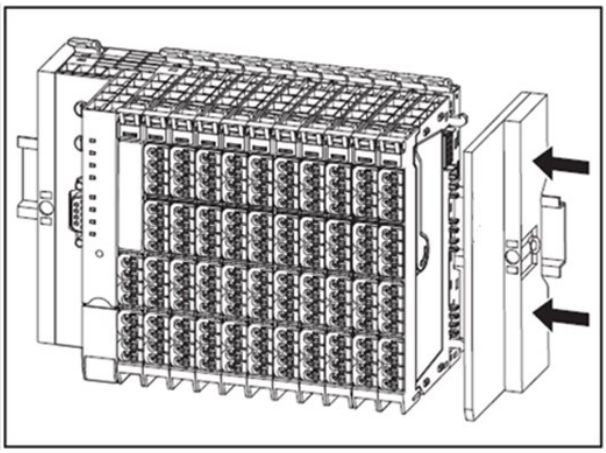

10. Screw down the end bracket tightly (using a 3-mm screwdriver).
11. Make sure that all release levers are in the locking position as standard. If this is not the case, click the open release lever into place.

6.3 Attaching the Marker

6.3.1 Attaching the Swivel Marker

A swivel marker, available as an accessory (EP-8100), is best suited for making detailed markings on the connector frame.

1. Snap the swivel marker into place on top of the module connector frame.

Figure 246: Attaching the Swivel Marker

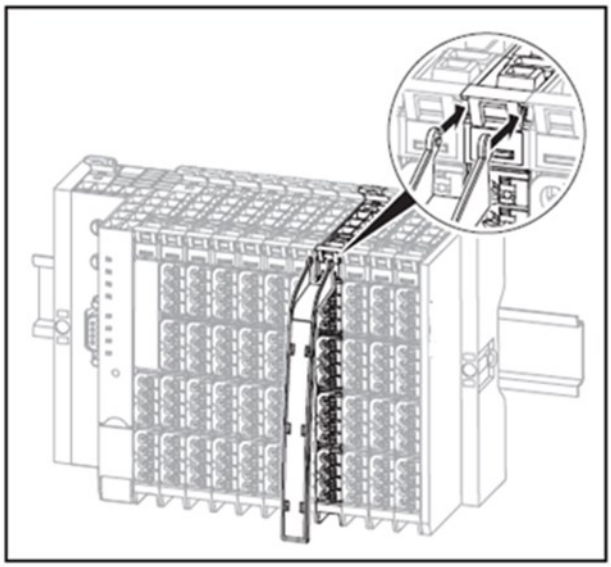

2. Insert the labelled marker into the swivel marker from below.

6.4 Wiring

⚠ WARNING

Explosion risk - During assembly work, sparks can form, and surfaces may become excessively hot.

- Before assembly, make sure that there is not a potentially explosive atmosphere.
- For applications in potentially explosive atmospheres, observe the installation and construction requirements of EN 60079- 15 and/or country-specific regulations

⚠ DANGER

Dangerous contact voltage:

- Carry out assembly and wiring work on the RSTi-EP station only when the power supply is disconnected.

- Make sure that the place of installation (switch cabinet etc.) has been disconnected from the power supply.

⚠ WARNING

Safety functions of EP-19xx modules can be impaired. When EP-19xx modules are installed in the RSTi-EP station, observe the following points:

- Use wire-end ferrules in combination with flexible/multi-conductor cables.
- Ensure that for safety inputs in the configuration without test pulses the cabling prevents external short circuits (refer to DIN EN ISO 13849-2 Table D.4).

6.4.1 Wiring of Modules with Standard Connectors

Wires with a cross section between 0.14 mm² and 1.5 mm² (AWG 26 – 16) can be connected.

The external dimensions of the crimped wire-end ferrules must conform with IEC−60947-1.

RSTi-EP modules (except HD modules) and bus network adapters are equipped with the *spring-style* connector system. Single-strand and fine-strand lines with wire-end ferrules can be inserted without the need for a tool.

- Each cable must be the optimal length, so the bending radii observe the manufacturer's specifications.
- Strip the insulation from the lines to a length of approx. 10 mm ± 1 mm (0.4 in ± 0.04 in), even if you are using wire-end ferrules. If you use wire-end ferrules with plastic collars, strip the wires to 12 mm ± 1 mm (0.5 in ± 0.04 in).
- Connect all lines according to wiring diagram.

For the usage and handling of the *spring-style* system, refer to Section, Removing/Replacing Cables.

6.4.2 Wiring of Modules with HD Connectors EP-8360

When using HD-connectors EP-8360 qualified wires with a cross section between 0.14 mm² and 0.35 mm² (AWG 22 – 26) and an outer wire diameter between 1.0 und 1.6 mm (0.04 to 0.06 in) can be connected by insulation displacement connectors (IDC). A list of SAI cables approved for the use with HD-connectors (Document-No. GFK-2971) is available to download from the https://www.emerson.com/Industrial-Automation-Controls/support.

Required tools:

- Multi-stripax 6-16 (9202210000)
- Pressing tool PWZ-UR20-HD (1525820000)

Note: When using HD-connectors EP-8360 two HD connectors must always be applied into one slot of the connector frame.

Figure 247: Application of HD Connectors

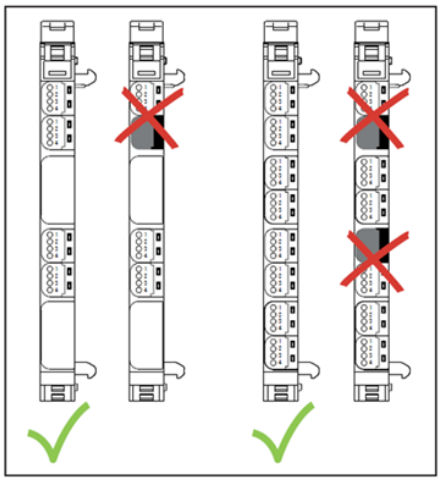

- Each cable must be the optimal length, so the bending radii observe the manufacturer's specifications.
- Strip the insulation from the cable to a length of approx. 20 mm (0.8 in) using the multi-stripax 6-16.
- Insert all wires according to wiring diagram as far as they will go into the clamping unit of the connector. Note the marking (pin 1 to 4) on the transparent presorted.
- Apply the pressing tool and check whether all wires are inserted as far as they will go.
- Press the HD connector using the pressing tool.
- Insert the wired connector into the module's connector frame.

6.5 Insulation Test

Insulation tests on the RSTi-EP station must be done according to regulations, in any case, they are necessary before each commissioning.

⚠CAUTION

The product can be destroyed by a test voltage which is too high.

Note during insulation test:

- Within one channel the test voltage between 24 V and GND must not exceed 28.8 V†
- A maximum test voltage of 500 V can be applied to all other connection points.
- Up to 4,000 V can be applied to the modules EP-2814 and
- EP-2714:
  - between the four channels
  - between one channel and the system voltage.

† Emerson recommends short-circuiting 24 V and GND on all power supply connectors (fieldbus network adapter, power-feed modules, and EP-19xx).

Section 7: Earthing and Shielding

The terms *earths* and *shields* are classified according to their relation to human safety or system safety. An earth is installed primarily to protect human life, and for this reason it is referred to as the protective earth (PE) conductor. A shield, on the other hand, serves to ensure the trouble-free operation of an electrotechnical system as well as electromagnetic compatibility.

The main differences between the two terms are therefore the electrical design and installation. A shield is not designed to transfer power, even though leakage currents can flow on it – something which must be avoided. In contrast, a PE conductor must be capable, at least in the short term, of discharging high residual currents (IEC 60947-7-2). The corresponding short-term current resistance of the PE connection must be 120 A/mm² (77419.2 A/in²) of the connected cross-section. To make sure a shielding concept is able to work properly, the shield impedance must be 10 times larger than the impedance of the earth potential.

The following figure shows how these two topics relate to each other in application. As shown in the figure below, the cable's shielding is connected to the earth potential so that the shield's current can be discharged. Depending on the sensitivity of the system, an attempt is made to create separate potential areas for this. However, it is still typical to mix the areas, i.e. the shielding has a common equipotential bonding (earth). This figure shows how the number of shields and PE conductors that need to be connected can increase quite rapidly (in this case only one component is used). The shielding and earthing systems must be planned carefully to provide adequate safeguards for personnel and equipment. The following sections describe the complexity and special characteristics in more detail.

Figure 248: Connection Diagram of a Frequency Converter

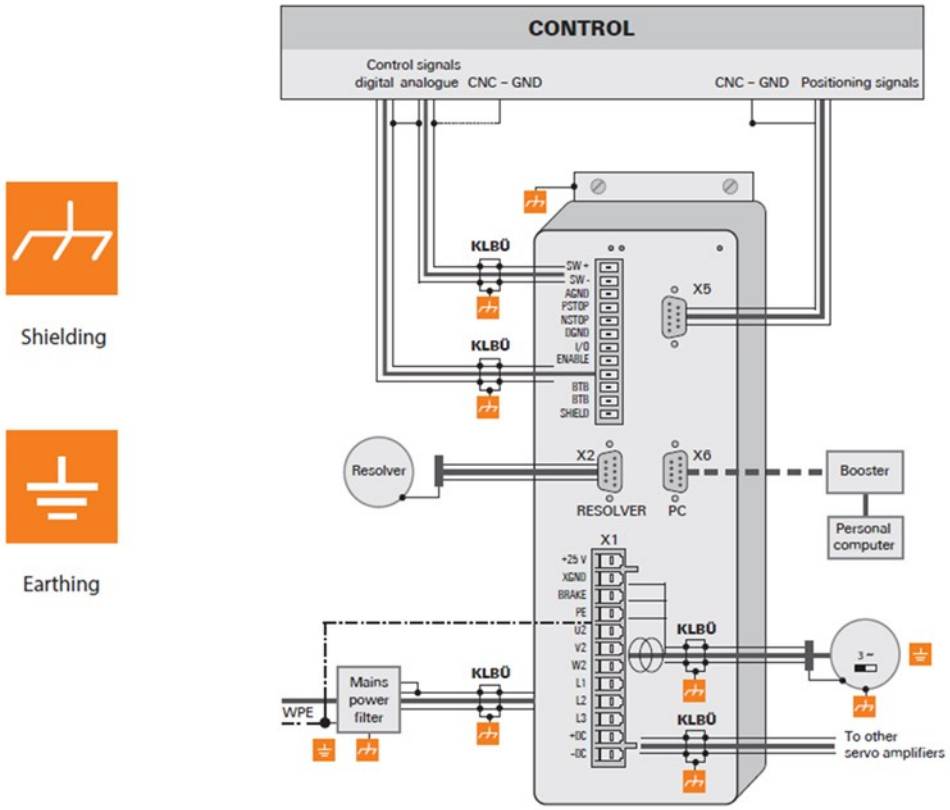

7.1 Earthing of Shielded Cables

Electrical and electronic systems must be designed such that they are largely safeguarded against electrical interference, thus enabling them to operate securely even in the case of transient interference voltages.

Electrical interference can be introduced into electric circuits in a variety of ways. The most frequent causes are due to inductive interference. In addition, galvanic and capacitive coupling as well as electrical fields and other processes are causes for interference voltages. Here, high-frequency voltage fluctuations – known as transients – are the cause of interference with a high level of effectiveness.

7.1.1 Shielded Cables Increase Interference Resistance

The sources of interference voltages can rarely be eliminated, and even then, not always completely. Thus, it is necessary to take measures to combat their effect. In general, the more effectively interference voltages can be kept away from circuit elements or can be discharged, the less electrical circuits are affected. This can be accomplished in a variety of ways with varying levels of effectiveness. A very effective measure, for safeguarding against inductive effects, that is, ensuring electromagnetic compatibility (EMC), is the shielding of electrically functional components to earth potential. In doing so, for instance, components

are installed in metallic, earthed housings and the connecting lines are equipped with shielding.

In general, it can be said that interference from cables can be combated by routing cables as far away as possible from each other, keeping the common return as short as possible and using twisted-pair wire. Far better protection, however, is provided by completely shielding of all cables. This is the most effective measure that can be taken against the coupling of interference signals.

The best type of shielding consists of a braided mesh sleeve that uses individual wires made of non-magnetic materials (copper, aluminum). The braided mesh should be sufficiently large and be as thick as possible. For cables that are equipped with foil shields, it is necessary to be aware of the low mechanical strength and the low current-carrying capacity of the shielding.

7.1.2 Proper Use of Shielded Cables

The shielding of cables will only result in the desired effect if this is implemented properly. Incorrect earthing or the use of improper components that perform their task inadequately reduces or even eliminates the effect. Placing the shielding at any spot on the earth potential will not suffice, as this earth connection may have no effect on high frequencies. In addition, ground loops must also be taken into consideration. Furthermore, the shielding should be earthed over a large surface area. Beyond that, the quality of the shield conductor and earthing accessories is also important.

In practice, the shield is still often twisted and connected to a terminal point. There is very high attenuation (voltage drop) on these connections, especially for high-frequency interference. Therefore, this type of shielding should not be used, even for short cable lengths. The shielding of the cable is practically negated and can, at best, be helpful for low frequency interference. We recommend that there is a large amount of surface contact with the braided shield of the cable.

There are generally four distinct types of coupling:

- Galvanic coupling
- Capacitive coupling
- Inductive coupling
- Radiation coupling

These types of interference usually occur mixed together, but they can be categorized as follows:

- Electromagnetic fields
- Ripple voltage (50 Hz)
- Lightning
- Interference pulses (current, voltage)
- Transient surge voltages

- Radio interference
- ESD (electrostatic discharge)
- Burst
- Mains feedback

Note: Another area of concern as regards shield contact is the flow within the conductor. Temperature changes caused by the current lead to changes in the conductor cross-section. A rigid contact can therefore only be partially effective. A self-adjusting contact is what is really required.

Figure 249: Use of a Clamping Bracket

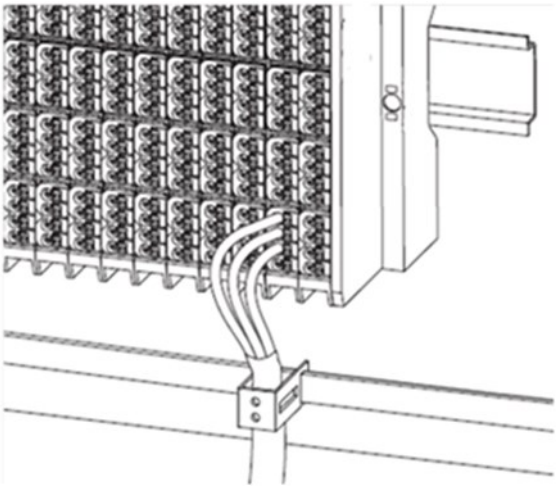

7.1.3 Effective Shielding

It is important that the shielding is not positioned on the earth of the connected component, but on the protective earth. In the case of components that are installed in a metal housing, the shielding must be positioned to this housing. If no earthed housing is available, the shielding is positioned on a separate earth.

When installing ground connections on shielding, it is generally also important that no earth loops are created. The smaller the earth loop, the less the danger of the induction of interference voltages. It is therefore most suitable to have a purely neutral-point installation.

The following sketches show the possible shielding connections to protective earth.

A one-sided connection of the shielding protects against capacitive coupling of interference voltages.

Figure 250: Shield Grounding at One End Only

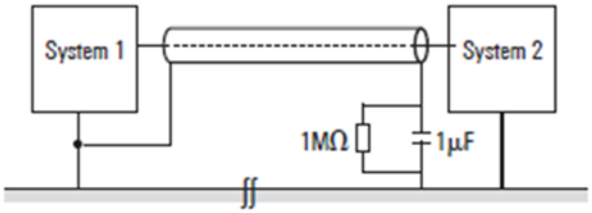

If you use a two-sided shielding connection, make sure that compensating current (different earth potentials) does not flow through the cable shield.

Figure 251: Shield Grounding at Both Ends

If you wish to avoid the disadvantages associated with creating an earth loop with two-sided shields, it is recommended you connect one side of the shield through a high impedance.

Figure 252: Shield Grounding at Both Ends with High-Impedance at One End

For longer lengths of shielded cables, such as if a sensor must be added to a control panel, a potential difference between both end points must not be ignored.

However, such shield conductors are relatively expensive and require more time in working with them. Another possibility would be to place an additional voltage equalizing cable between the measurement location and the control panel. The shield can then be hooked up on both sides.

A high-impedance earth connection is also another option. In the control panel, the shield is then connected to the earth potential, and the shield has a high-impedance connection to earth at the measurement location via a gas discharge tube. This solves the problem of a potential transfer and 50-Hz humming.

For non-isolated measurement locations, two gas discharge tubes must be installed. One connects the shield to earth, and the other connects it to the non-isolated measurement location. This method prevents a galvanic coupling between the measurement circuit and the earthed measurement location.

Figure 253: Shielding using Gas Discharge Tubes

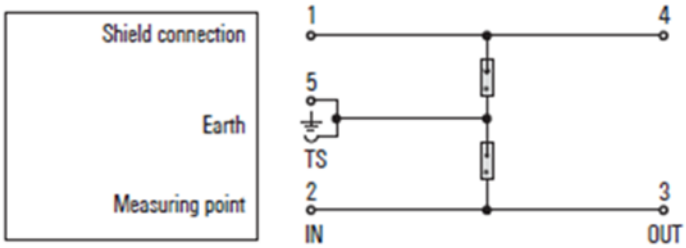

7.2 Potential Ratios

7.2.1 Basic Aspects

Concerning the potential ratios of a RSTi-EP system, the following aspects must be kept in mind:

- The power supply of the network adapter and I/O modules as well as field power is provided via the power supply at the power-feed module (PF)
- A potential-free design is made possible using an isolated power supply at the system power supply and the field power supply

The block diagram shows the typical design of a RSTi-EP system. The power supply concept here makes sure that, starting with a certain capacity utilization, power refresh is implemented using power-feed modules.

Figure 254: RSTi-EP Power Supply Concept

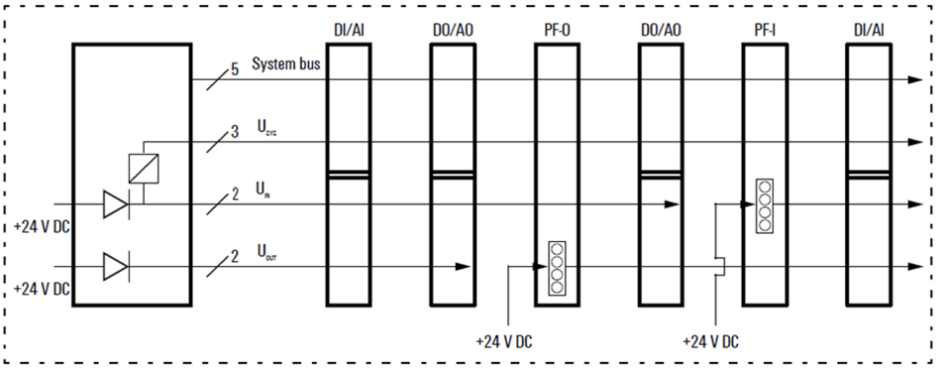

7.2.2 Potential-Free Design

In a potential-free design, the reference potentials of control and load circuits are galvanically isolated from each other. A potential-free design is necessary for the following:

- Use of the power-feed module (EP-19xx), i.e. in all AC load circuits

– DC load circuits that cannot be coupled

Potential-free installation depends on the type of earthing.

7.2.3 Non-Isolated Design

In a non-isolated design, the reference potentials of control and load circuits are galvanically connected to each other.

Figure 255: RSTi-EP Earthing Concept

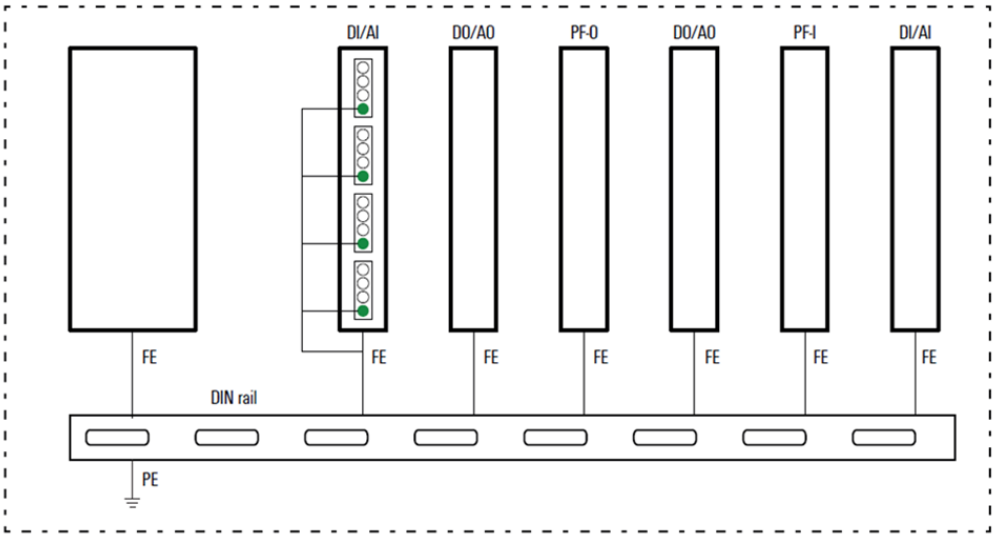

The spring contacts underneath the module and the network adapter snap into the DIN rail to make a connection.

7.3 Electromagnetic Compatibility (EMC)

RSTi-EP products completely meet EMC requirements. EMC planning, however, is necessary prior to installation.

Aspects to consider include all potential interference sources such as galvanic, inductive and capacitive couplings, as well as radiation couplings.

7.3.1 Ensuring EMC

To ensure EMC, the following basic principles must be observed during installation of the RSTi-EP modules:

- Proper, extensive earthing of inactive metal parts
- Correct shielding of cables and equipment
- Proper layout of wires – cabling
- Creation of a uniform reference potential and earthing of all electrical equipment

- Special EMC measures for special applications (e.g. frequency converters, servo drives)
- Contactors and relay coils must be equipped with the corresponding interference suppressors

7.3.2 Earthing of Inactive Metal Parts

The earthing of all inactive metal parts reduces the influence of coupled interference. For this purpose, all inactive metal parts (such as switch cabinets, cabinet doors, support beams, mounting plates, DIN rails, etc.) must be connected to each other over a large surface area with low impedance, whereby a uniform reference potential is ensured for all control unit elements.

Required measures:

- Removal of the insulating layer around screw connections. Protection of connection points against corrosion
- Connection of moving earthed components (cabinet doors, separated mounting plates, etc.) through short earthing straps with large surfaces
- Where possible, avoid use of aluminum parts, because aluminum oxidizes easily and is therefore unsuited for earthing

7.3.3 PE Connection

The connection from earth to the PE (protective earth) connection must be done centrally.

⚠ WARNING

In the event of a fault, the earth must never take on a dangerous contact voltage, which is why it must be connected to a PE conductor.

7.3.4 Unearthed Operation

In the event of unearthed operation, the corresponding safety regulations must be observed.

7.3.5 DIN Rails

Notes concerning the use of DIN rails:

- Large-surface, low-impedance attachment on the mounting plate and corresponding contact with the carrier system using screws or rivets
- Proper earthing
- Use corrosion-proof DIN rails
- Remove the insulating layer on painted, anodized or insulated metal components in the area around the connection point

- Protect the connection point against corrosion (e.g. using grease; Attention: only use grease suitable for the purpose)

7.3.6 Cabinet Design According to EMC Guidelines

Figure 256: Cabinet Design Features for EMC Compliance

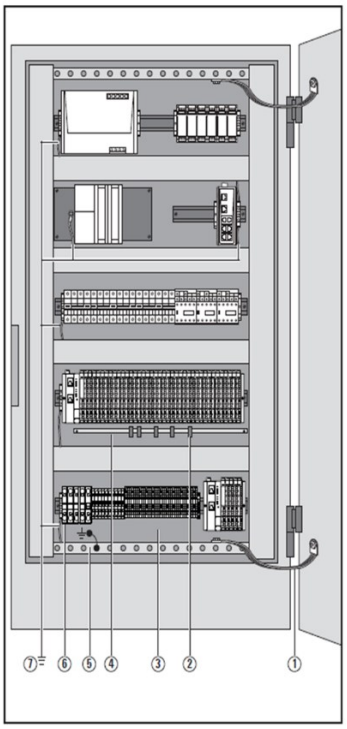

1. **Earthing strips**

Earthing strips must be used for connecting inactive metal parts if it is not possible to connect two large pieces of metal. Use short earthing strips with large surfaces.

2. **Clamping bracket for signal cables**

If shielded signal cables are used, the shield must be attached to the clamping bracket (KLBÜ series) on the busbar over a large surface. The braided shield must cover and make good contact with a large part of the clamping bracket.

3. **Mounting plate**

The support beam for holding control components must be connected to a large part of the cabinet housing.

4. **Busbar**

The busbar must be connected via the rail holding fixture. The cable shields are fixed to the busbar.

19. Protective earth conductor rail

The protective earth conductor rail must likewise be attached to a large part of the mounting plate, and it must be connected to the protective earth conductor system via an external cable with a cross-section of at least 10 mm2, in order to discharge interference current.

5. **Protective earth terminal strip**

The protective earth terminal strip must be connected to the protective earth conductor rail in a neutral-point configuration.

6. **Cable to protective conductor system (earthing point)**

The cable must be connected to a large part of the protective conductor system.

Refer to EMC Directive 2004/108/EC

7.4 Shielding of Cables

To prevent the coupling of interference voltages and the decoupling of interference fields in cables, only shielded cables made from well-conducting material (copper or aluminum) with braided shielding and a coverage of at least 80 % should be used in the design of a cable shield.

Only when a cable shield is connected to the local reference potential on both sides is it possible to achieve optimal shielding against electric and magnetic fields. Exceptions are possible, for example, with high-impedance, symmetrical or analogue signal cables. If a shield is attached on only one side, this merely achieves an isolation against electric fields.

⚠CAUTION

Requirements for effective shielding design:

- The shield connection to the shield bus should be low impedance
- The shield must be connected directly at its entrance into the system
- Keep cable ends as short as possible
- Do not use cable shields for equipotential bonding

When connecting a data cable using a sub-D connector, the connection must be made through the connector's shield collar and never through pin 1.

The data cable's shield must be attached to the shield bus with the insulation stripped away. The shield is to be connected and attached with clamping brackets or similar metal fixing devices. The shield bus must be connected to the reference potential surface through a low impedance [e.g. fastening point with a separation of 10 to 20 cm (3.94” x 7.87”)]. The brackets must surround and contact a large part of the shield.

Isolation of the cable shield should be avoided. Instead, it should be routed into the system (for example, the switch cabinet) up to the interface connection.

Attention

When shielding field-bus cables, the installation guidelines for the respective field buses must be observed. (Refer the websites of the field bus organizations.)

⚠CAUTION

- If it is only possible to have a one-sided shield connection for reasons specific to the circuit or equipment, the second side of the cable shield can be routed to the local reference potential via a capacitor (with short connections). To prevent disruptive discharges when interference pulses occur, a varistor or a resistor can also be wired in parallel to the capacitor.
- As an alternative, a doubled version (galvanically isolated) can be used, whereby the inner shield is connected on one side and the outside shield is connected on both sides.

7.4.1 Equipotential Bonding

If system components are positioned separately from each other, potential differences may arise, provided that:

- Power is provided from different sources
- The earthing is implemented at different system parts, despite the cable shields being connected at both sides

A voltage equalizing cable must be used for equipotential bonding.

⚠ WARNING

The shield must not be used for equipotential bonding.

The following features are essential for a voltage equalizing cable:

- In the case of cable shields on both ends, the impedance of the equalizing cable must be considerably smaller than that of the shield connection (maximum 10 % of its impedance)
- When the length of the equalizing cable is less than 200 m (656.2 ft), its cross-section must be at least 16 mm2 (0.025 in2). If the cable is greater than 200 m (656.2 ft) in length, a cross-section of at least 25 mm2 (0.039 in2) is necessary.
- Large-surface connection with the PE conductor or the earthing and corrosion protection are requirements for long-term safe operation
- They must be made of copper or galvanized steel
- In order to keep the enclosed area as small as possible, the equalizing cable and signal cable must be routed as close to each other as possible

7.4.2 Inductance Wiring

For inductive loads, it is recommended that protective circuits be placed directly on the load. The earth (PE/FE) must be connected in a neutral-point configuration according to regulations for switch cabinets.

⚠CAUTION

When disassembled, RSTi-EP modules and network adapters are at risk of electrostatic discharge (ESD). Therefore, avoid touching bus connections with bare hands, as this can lead to damage due to electrostatic discharges

Figure 257: Equipotential Bonding

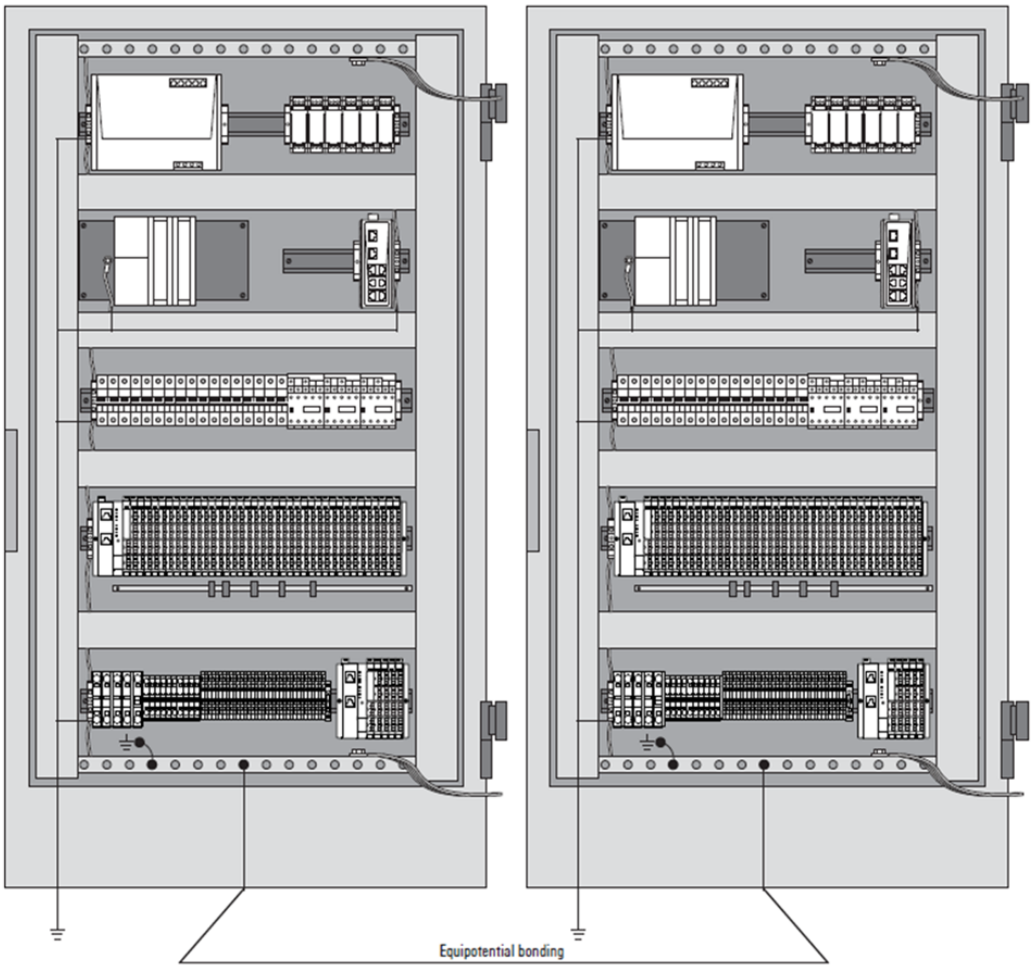

Section 8: Commissioning

WARNING

- Explosion risk - Prior to starting work, make sure that there is not a potentially explosive atmosphere.
- During commissioning, the system may be manipulated to such an extent that can result in risks to life and material damage.
- Ensure that system components cannot start up unintentionally.

⚠CAUTION

Conduct an insulation test before each commissioning (refer to the section, General Contact Information).

The procedures applied during commissioning depend on which control unit is being used on site. The descriptions in this Section use commissioning with a PROFINET network adapter and the PAC Machine Edition as an example.

8.1 Requirements

Before you start the commissioning work, the following requirements must be fulfilled.

- The control unit must be in operation.
- The RSTi-EP station must be completely assembled and wired up.
- The control unit and RSTi-EP station must be connected via fieldbus, and a PC/laptop must also be connected.
- The power supply must be turned on.

If these requirements are fulfilled, the following LEDs light up:

- On the bus network adapter
  - The PWR LED lights up green.
  - For the port to which the control unit is connected, the LINK LED lights up green and the ACT LED lights up yellow.
- On the modules, the Status LED lights up green.

8.2 Configuring EPXPNS001/EPXPNS101

- To add an EPXPNS001/EPXPNS101 to a LAN

From the **Navigator** right-click on the **EPXPNS001/EPXPNS101** module and select **Add I/O Device**. The **PROFINET Device Catalog** displays.

Figure 258

From the **PROFINET Device Catalog**, expand the **EPXPNS001/EPXPNS101** line and select the module type:

Figure 259

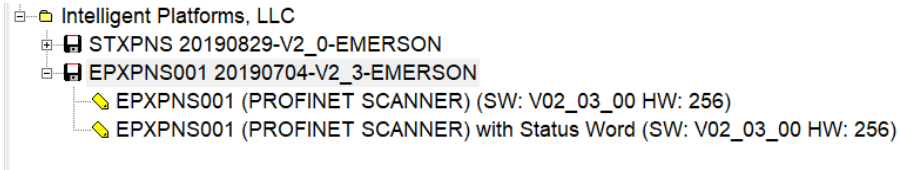

Select the **EPXPNS001/EPXPNS101** type and click **OK**. The **EPXPNS001/EPXPNS101** displays in the **Navigator** window:

Figure 260

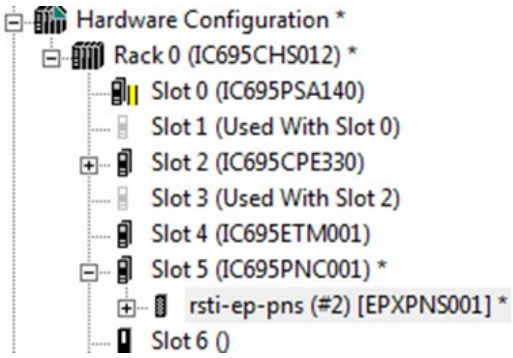

The device name, IP address of the EPXPNS001/EPXPNS101 can be changed by right-clicking on the scanner and selecting properties.

Figure 261

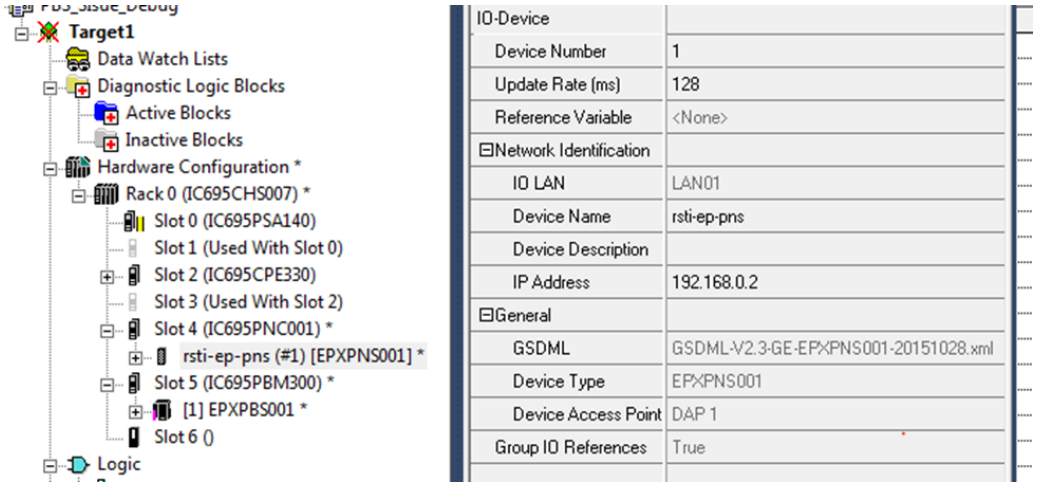

Note: When firmware is updated, the IP address is not retained when configured using the master module. But when configured in web server and the same IP is used in the master, it is retained during PROFINET Network Adaptor firmware update.

8.2.1 Configuring EPXPNS001/EPXPNS101 Parameters

After adding a EPXPNS001/EPXPNS101 to the LAN, its parameters can be configured by either double-clicking on the scanner in the Navigator, or right-clicking and selecting Configure from the menu.

PROFINET Scanner Parameters (Redundancy Tab) for (EPXPNS101 only)

This Tab is available only for EPXPNS101 and not for the EPXPNS001 module. If the EPXPNS101 must be used for PROFINET System Redundancy with HSB system (Type S2), then the “Redundancy Mode” parameter needs to be set as “HSB CPU Redundancy”.

Figure 262

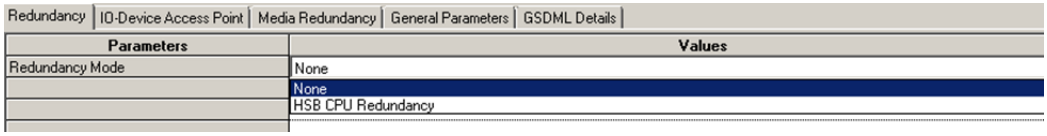

PROFINET Scanner Parameters IO-device Access Point

Figure 263

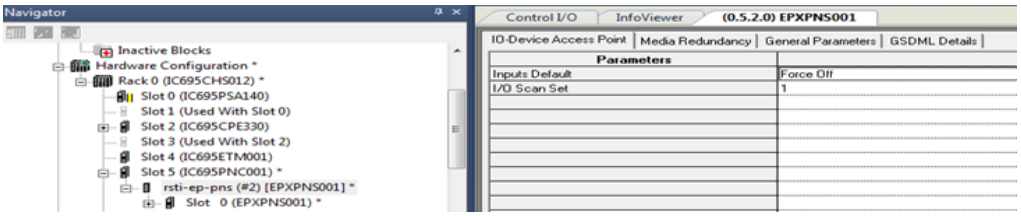

Inputs Default: Choose whether the RX3i CPU will set inputs from any modules in the EPXPNS001 module's remote node to Off or Hold Last State in the following cases:

- The EPXPNS001/ EPXPNS101 is not operational or is removed.
- The EPXPNS001/ EPXPNS101 cannot reach the scanner due to cable or network configuration issues.
- The EPXPNS001/ EPXPNS101 is not able to scan the VersaMax module in its remote node.

I/O Scan Set: Specifies the I/O scan set to be assigned to the EPXPNS001/ EPXPNS101. Scan sets are defined in the CPU's Scan Sets tab. The valid range is 1 through 32; the default value is 1.

PROFINET Scanner Parameters (Media Redundancy Tab)

By default, the EPXPNS001/ EPXPNS101 is not set up for Media Redundancy. If the system will use Media Redundancy, open the Media Redundancy Tab and select Client.

Figure 264

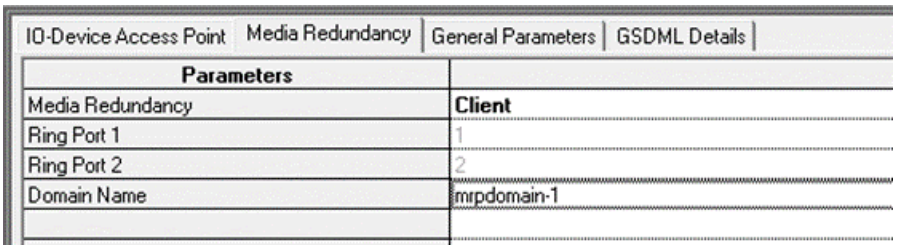

PROFINET Scanner Parameters (General Parameters Tab)

The EPXPNS001/ EPXPNS101 has below module parameters:

Figure 265

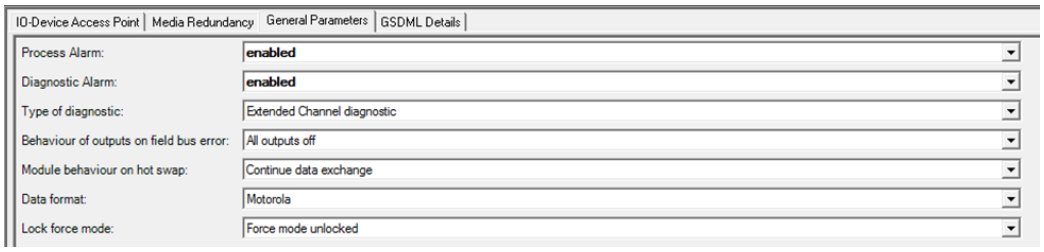

Process Alarm, Diagnostic Alarm:

User can select the process alarm, diagnostic alarm to be enabled or disabled. By default, they are disabled.

Type of Diagnostic:

The Type of diagnostic can be selected either “Extended Channel diagnostic” or “Vendor Specific diagnostic”.

Figure 266

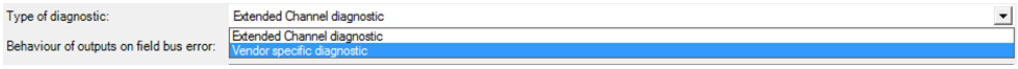

Behavior of Outputs on Field Bus Error:

The behavior of the outputs can be set to all outputs to go off, set to substitute value or Hold last state.

Figure 267

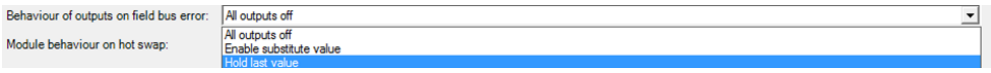

Module Behavior on Hot Swap:

When the user performs hot swap, user can either continue data exchange or can behavior like field bus error.

Figure 268

Data Format:

Use can select either Motorola or Intel data format. By default, it is Motorola.

Figure 269

Lock Force Mode:

User can enable the force of outputs while the slave is communicating with the master or can lock the force mode so that the outputs cannot be forced.

Figure 270

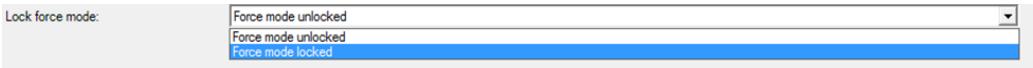

These parameters below are added from revisions: EPXPNS001-ABAE and EPXPNS101-AAAA.

Option Handling:

User can either enable or disable the Option handling. By default, it is “disabled”.

Group Module Diagnostic Alarm:

User can either enable or disable the Group Module Diagnostic Alarm. By default, it is “disabled”.

Figure 271

Reduce Return of Submodule Alarm:

User can either enable or disable the Reduce Return of Submodule Alarm. By default, it is “disabled”.

Figure 272

PROFINET Scanner Parameters (GSDML Tab)

The GSDML tab 0f the EPXPNS001/ EPXPNS101 module displays the information from its GSDML file. See an example below:

Figure 273

IO-Device Access Point | Media Redundancy | General Parameters | GSDML Details

Device Access Point: EPXPNS001 (PROFINET SCANNER)

Name:	EPXPNS001 (PROFINET SCANNER)
ID:	DAP 1
DNS Compatible Name:	rsti-ep-pns
Physical Slots:	0..64
Supports System Redundancy:	False
Description:	PROFINET IRT NETWORK ADAPTER, 2 CU PORTS
Vendor:	Intelligent Platforms,LLC
Order Number:	EPXPNS001
Hardware Release:	256
Software Release:	V02.03.00

Graphic: GSDML-015A-000C-EPXPNS001

Figure 274

Redundancy | IO-Device Access Point | Media Redundancy | General Parameters | GSDML Details

Device Access Point: EPXPNS101 (PROFINET SCANNER)

Name:	EPXPNS101 (PROFINET SCANNER)
ID:	DAP 1
DNS Compatible Name:	rsti-ep-pns
Physical Slots:	0..64
Supports System Redundancy:	True
Device Type:	S2
Maximum Switchover Time:	15
Maximum Number of SR-AR sets:	1
Description:	PROFINET IRT NETWORK ADAPTER, 2 CU PORTS
Vendor:	Intelligent Platforms,LLC
Order Number:	EPXPNS101
Hardware Release:	256
Software Release:	V02.04.00

Graphic: GSDML-015A-000C-EPXPNS101

This information cannot be edited.

Double-clicking on Interface 1 icon of the EPXPNS001/EPXPNS101 module in the Navigator displays additional GSDML parameters. See an example below:

Figure 275

GSDML Details

Interface: EPXPNS001

Interface:	EPXPNS001
Supported RT Classes:	RT_CLASS_1;RT_CLASS_3
Supported Protocols:	SNMP;LLDP
Supported Management Info Bases:	MIB2
Network Component Diagnosis Supported:	True
DCP Hello Supported:	True
PTP/LLDP Boundary Supported:	False
DCP Boundary Supported:	False

Double-clicking on the EPXPNS001/EPXPNS101 module's Port 1 and Port 2 icons in the Navigator also displays Settings and additional GSDML parameters for the scanner. See an example below:

Figure 276

8.2.2 Adding EPXPNS001/ EPXPNS101 Modules to a Remote Node

To add a module to the remote node, right click on the EPXPNS001/EPXPNS101 icon in the Navigator and select Change Module List. In the right pane of the Change Module List window, expand the list of module types.

Figure 277

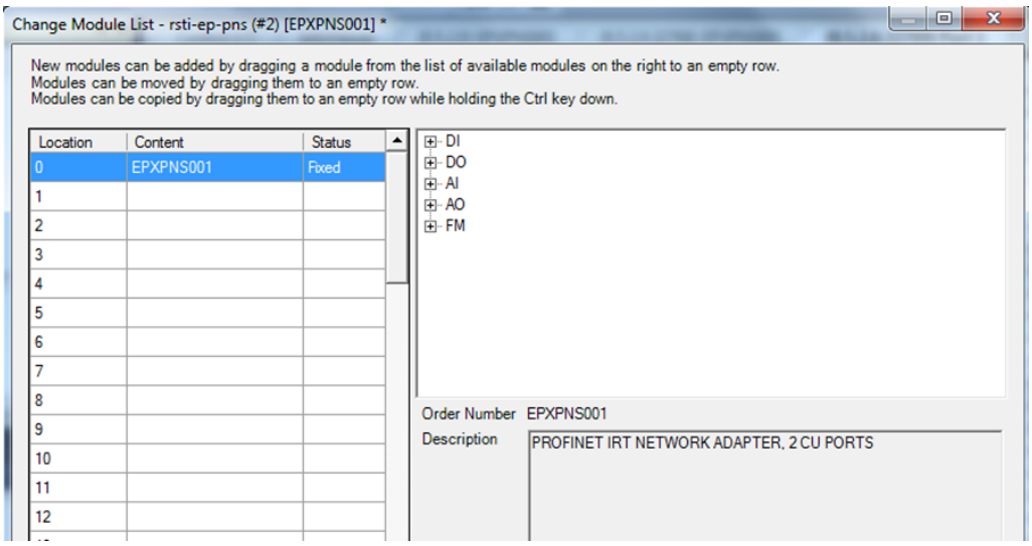

Select modules from the list and drag them to their slot locations in the remote node.

Figure 278

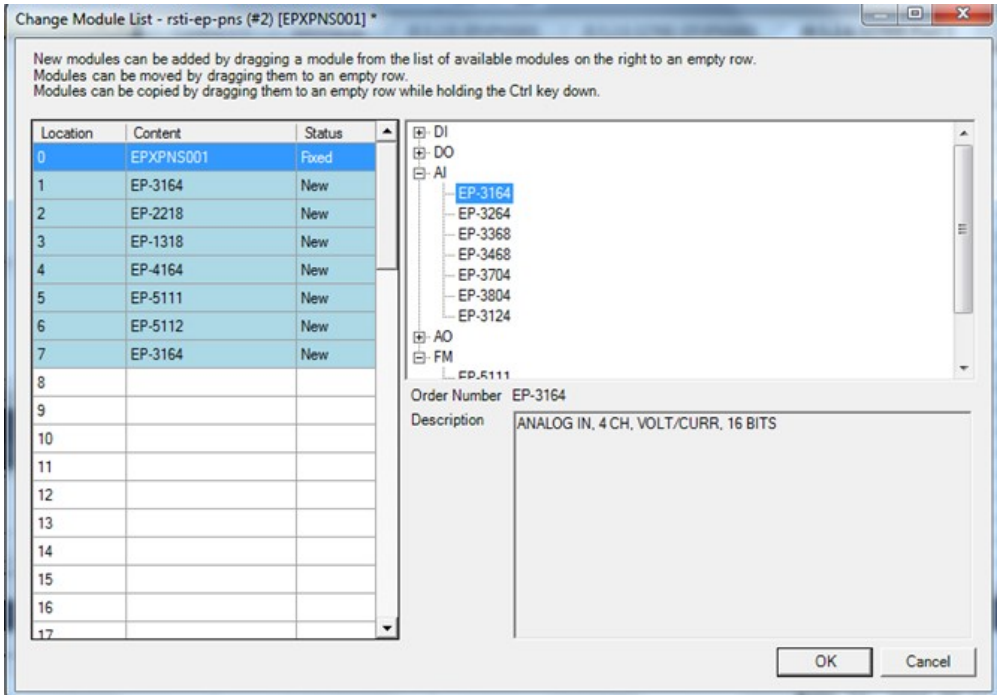

(If you need to delete a module on the left, select it and press the keyboard Delete key). When the modules on the left are correct, click OK to add them to the configuration.

8.2.3 Configuring EPXPNS001/EPXPNS101 Module Parameters

After adding RSTi-EP modules to the remote node, their parameters must be configured. For all EPXPNS001/EPXPNS101 modules, this includes configuring a set of basic parameters (such as: reference address, length, general parameters).

8.3 Configuring EPXPBS001

The number and types of slave devices that can exchange data with the master are constrained by memory resources within the master module. The amount of memory available for the PROFIBUS configuration is affected by the number and types of slave modules in the network configuration. The total slave configuration data size is limited to approximately 9KB.

8.3.1 Adding Slaves and Modules

- **To add slaves and modules**

  1. Start Emersion PAC Machine Edition.

2. In the Navigator window, right-click the EPXPBS001 and select **Add Slave**. The **Slave Catalog** dialog box displays. This dialog box lists the slave devices that are available to configure in the PROFIBUS network.

Figure 279

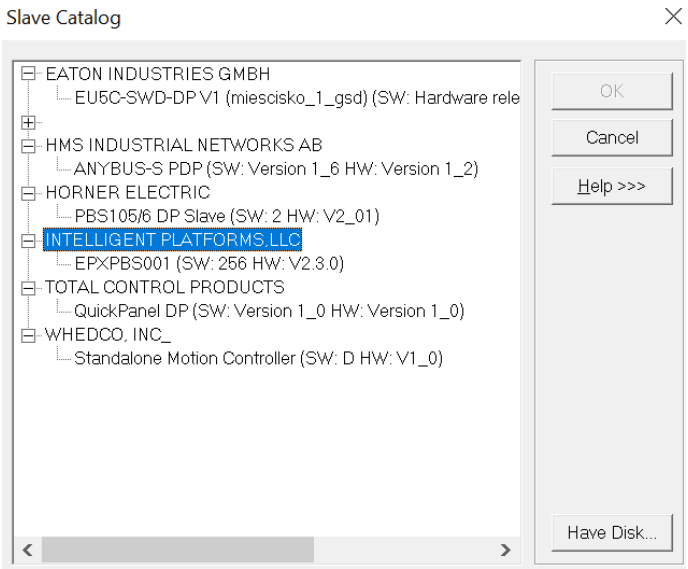

3. Select a slave device and click **OK**. The **Slave Properties** dialog box displays.

Note: If the slave module is not in the list but you have a GSD file for it, click **Have Disk**.

Figure 280

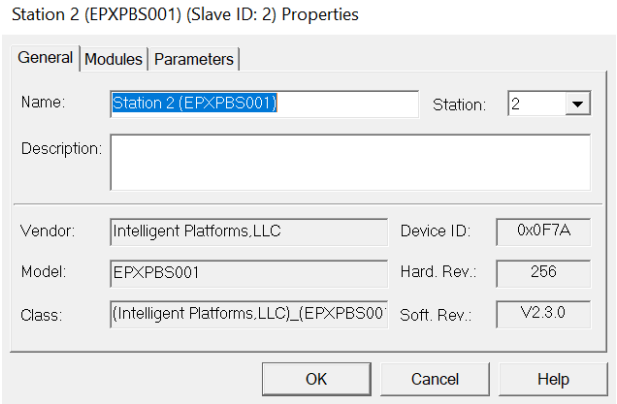

Name	The name assigned to the slave. You can edit the name or use the default name. The name appears in the title bar of the dialog box (in the figure above, the default name is Station 1.
Station	The address of the slave on a PROFIBUS DP network. The slave is defaulted to the next highest available address.
Description	An optional description for the slave device. The Inspector displays a maximum of 254 characters. However, more than 254 characters can be entered in the dialog box.
Vendor	The manufacturer of the slave device, from the GSD file. This is a read-only field
Device ID	The ID of the PROFIBUS device. This is a read-only field.
Model	The model of the slave device. This is a read-only field.
Hardware Rev.	The hardware revision of the device, from the GSD file. This is a read-only field.
Class	The class of the slave device. This is a read-only field.
Software Rev.	The software revision of the device, from the GSD file. This is a read-only field.

4. Enter **Name, Description** and **Station** if desired.
5. To add modules to the slave, select the **Modules** tab and click **Add**. The **Select New Module** dialog box displays.

Note: To add the slave to the configuration, you must configure at least one module.

Figure 281

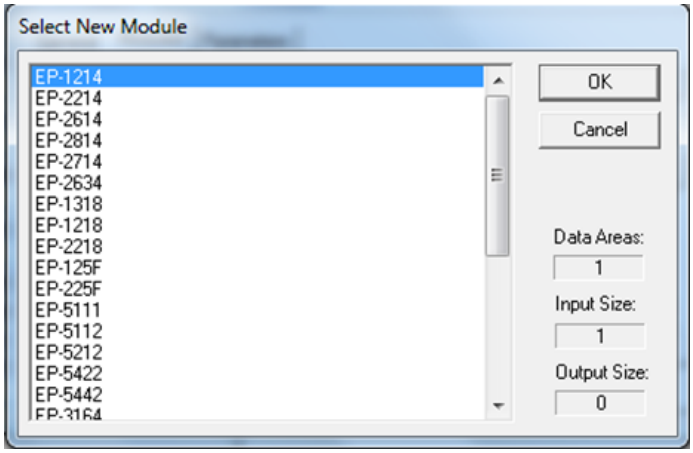

Note: The Select New Module list of modules is determined by the .GSD for the slave type. Each type of slave may have a different list of modules.

6. Select a module and click **OK**. The module is added to the **Modules** list in the **Slave Properties** dialog box. Add additional modules as required for your system. The following figure shows the **Modules** tab after several modules have been added.

Figure 282

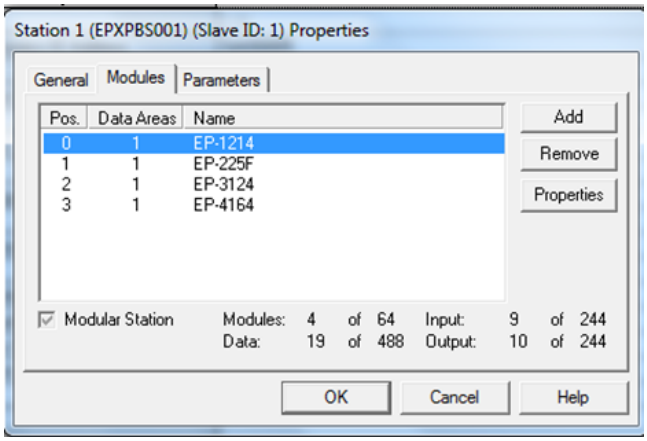

To change the order (position) of a module, select it and click **Properties**. The **Module Properties** dialog box displays. Enter the numerical value of the new position the module is to have. The position numbering starts at 0.

The other information in this dialog box is generated by the GSD file associated with the Slave module.

Note: The Data field corresponds to the module's configuration identifier as defined in the PROFIBUS specification.

Figure 283

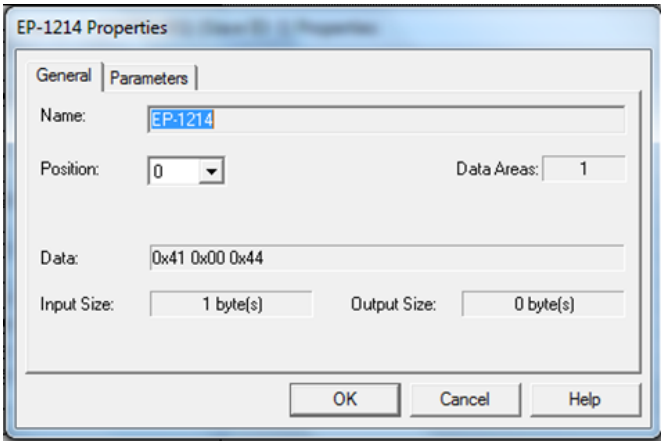

7. When finished adding modules, click **OK**. The modules display under the **Slave** node in the **Hardware Configuration.**

Note: To add, remove, or change the order of modules associated with an existing slave, right-click the Slave node in the Hardware Configuration and select Configure. The Properties dialog box for the selected slave opens.

8.3.2 Configuring Module Data Areas

- **To configure module data areas**: Right-click the **Module** node in the **Hardware Configuration**, and select Configure. The **Parameter Editor** window for the module displays.

The values for read-only parameters are supplied from the GSD text file that defines the PROFIBUS module's characteristics. Most devices have one data area with inputs, outputs or both. Some devices have multiple data areas that are shown as additional rows.

Data Area Parameters

Area	This value is an index beginning at 1. Read-only.
Type	Specifies whether the data is input or output as well as type, digital or analog. Value can be Digital In, Analog In, Digital Out, or Analog Out.
Ref Address	Specifies the memory area that is used to map the data area. Regardless of the reference type used, input areas are considered as consumed and cannot overlap, while output areas are considered as produced and may overlap. Allowable Ranges: %AI, %AQ, %I, %Q, %G, %R, %W, %T, %M. If the number of bytes is odd, analog memories are not allowed and selections are limited to: %I, %Q, %G, %M
Length	Specifies the length of the reference. Includes the entire data area by default. If set to 0, the data area is not mapped. For discrete memories, the allowable range is [0, 8, 16, ..., X] For analog memories, the allowable range is [0, 1, 2, ..., X]

Swap Bytes	The swap bytes field is used to manipulate the byte order. Because PROFIBUS devices often do not follow the standard, the ability to change byte ordering is provided. The analog areas travel in MSB and should be swapped if LSB is required. • If Type is Digital and the module has an odd number of bytes, Swap Bytes is set to False (no swapping) and read-only. • If Type is Digital and the module has an even number of bytes, default is set to False. Setting Swap Bytes to True causes the LSB and MSB to be swapped before the data is mapped into PLC memory. • If Type is Analog, default is set to False. Setting Swap Bytes to True causes the LSB and MSB to be swapped before the data is mapped into PLC memory. • For EP-5111, EP-5112, EP-5212, EP-5442 and EP-5422 modules, user should set Swap Bytes to true. In the application, if the user wants to access the DWORD for these modules, use SWAP_DWORD function block.

8.3.3 Configuring DP-V1 Settings for a Slave

Whether a slave device supports DP-V1 functions or not is indicated in the GSD file provided by the vendor of that device. For devices that do provide DP-V1 functions, support is disabled by default.

- **To enable DP-V1:**

1. From the **Project Navigator**, right-click the **Slave** and select **Properties**.

Figure 284

2. In the **Properties** window, click the ellipsis (...) in the **DPV1 Settings** field. The **PROFIBUS DPV1 Setup** dialog box displays.

Figure 285

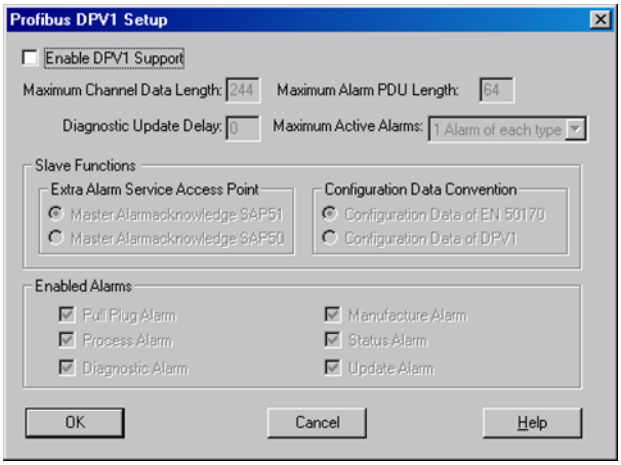

PROFIBUS DPV1 Setup Parameters

The default values in this dialog box are populated by the GSD file associated with the device.

Enable DPV1 Support	Check this box to enable DPV1 settings for the selected PROFIBUS device. The device's GSD file determines which settings are editable and which are read-only. Clear this check box to disable DPV1 settings. The values of all parameters are retained until the DPV1 settings are enabled again for the selected device.
Maximum Channel Data Length	The maximum length in bytes of the DPV1 telegrams. The slave adapts its buffer size for the respective data count. Valid range: 4 through n bytes, where n is the value specified in the GS? file.
Maximum Alarm PDU Length	The maximum length in bytes of the DPV1-Alarm telegrams. Valid range: 4 through n, where n is calculated by the following formulas m = Max_Diag_Data_Len - 6 n = Max(Min(m,64),4) Max_Diag_Data_Len is a value specified in the GS? file. If m is greater than 64, n is set to 64. If m is less than 4, then n is set to 4. Otherwise, n is set to m. If n is set to 4, the only valid Maximum Alarm PDU Length is 4. Default: The value n calculated by the above formulas.

Diagnostic Update Delay	The maximum number of extra diagnosis cycles that the master waits to obtain from a slave the release for a DATA_EXCHANGE. If the Diagnostic Update Delay is set to 0, the master waits for one diagnosis cycle before reporting an error. If the Diagnostic Update Delay is set to 15, the master waits for 16 diagnosis cycles before reporting an error. The master waits for one diagnosis cycle more than the value of the Diagnostic Update Delay. Some newer slave devices require more time for the consistency testing for the processing of the SET_PRM parameterizing telegrams. Therefore, a simple diagnosis cycle may be insufficient until the participant can inform the Master of the release for the DATA_EXCHANGE. Valid range: 0 through 15.
Maximum Active Alarms	The maximum number of possible active alarms. Choices: • 1 alarm of each type • 2, 4, 8, 12, 16, 24 or 32 alarms in total

Slave Functions

Extra Alarm Service Access Point	The service access point (SAP) through which the master quits alarms. Choices: • Master Alarm acknowledge SAP51: Master quits alarms via SAP51. • Master Alarm acknowledge SAP50: Master quits alarms via SAP50.
Configuration Data Convention	The DPV1 data types. Choices: • Configuration Data of EN 50170 • Configuration Data of DPV1

Enabled Alarms

Pull Plug Alarm	Modifiable or read-only, depending on the GSD file. When this box is checked, a slot signals the withdrawal of a module or the insertion of a module.
Process Alarm	Modifiable or read-only, depending on the GSD file. When this check box is checked, a process alarm signals the occurrence of an event in the connected process. For example, the event may be "upper limit value exceeded."
Diagnostic Alarm	Modifiable or read-only, depending on the GSD file. When this check box is checked, a diagnostic alarm signals an event within a slot. For example, events may be over temperature or short circuit.
Manufacture Alarm	Modifiable or read-only, depending on the GSD file. When this box is checked, manufacturer-specific alarms are enabled.
Status Alarm	Modifiable or read-only, depending on the GSD file. When this check box is checked, a status alarm signals a change in the state (such as run, stop, or ready) of a module.
Update Alarm	Modifiable or read-only, depending on the GSD file. When this check box is checked, an update alarm signals the change of a parameter in a slot, for example, by a local operation or remote access.

8.4 Configuring EPXETC001

- To configure EPXETC001 using CoDeSys

1. Open CoDeSys software, right-click **CoDeSys** and select **Add Device**.

Figure 286

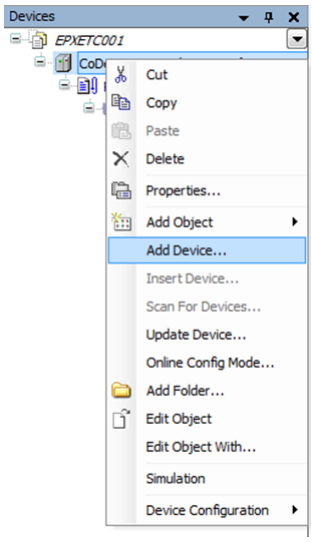

2. From the **Add Device** dialog box, click to select **Append device**, then double-click **EtherCAT Master**.

Figure 287

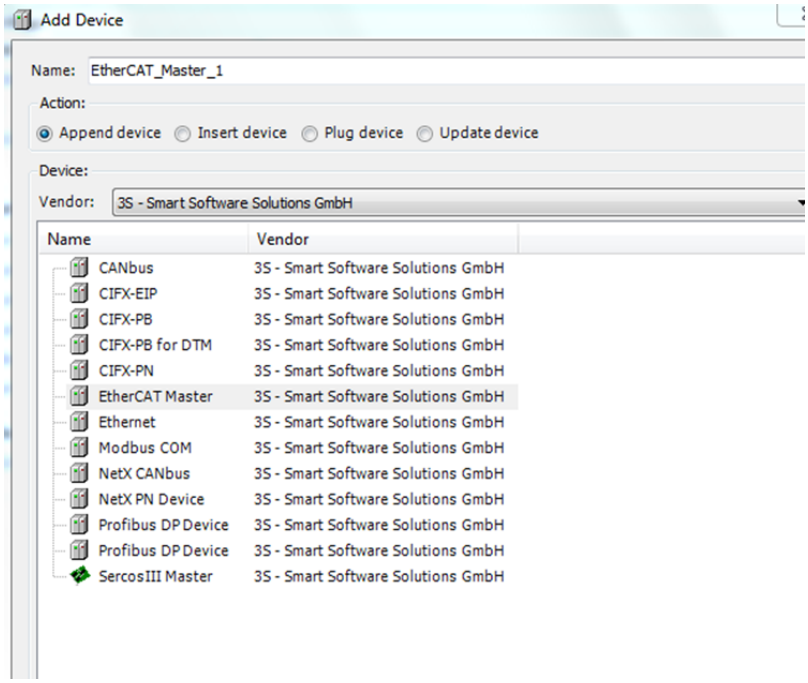

3. From the CoDeSys software **Tree View**, select **EtherCAT_Master** and from the **Tools** menu, select **Install device.**

Figure 288

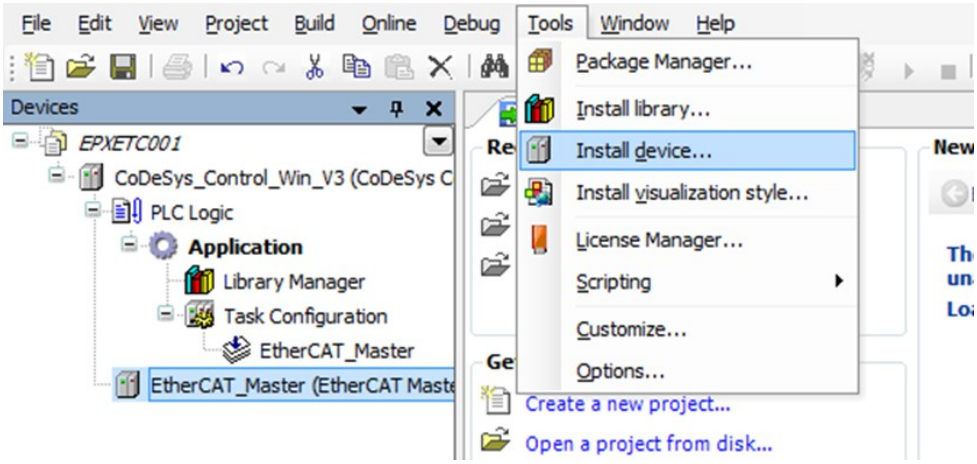

4. From the **Install Device Description** dialog box, select the **EMERSON_EPXETC001_TwinCAT.xml** file and click **Open**.

Figure 289

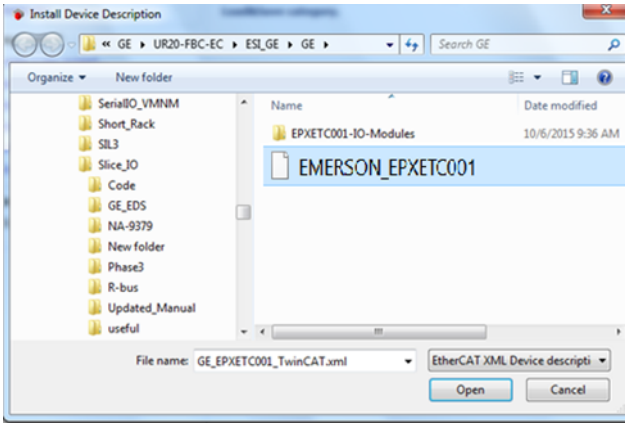

5. From the **Add Device** dialog box, click to select **Append device,** select the **EPXETC001** device, and click **Add Device**.

Figure 290

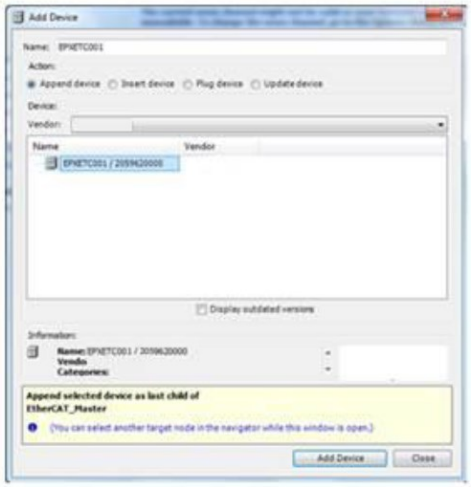

6. From the **Add Device** dialog box, select the **I/O devices** from the list and click **Add device.**

Figure 291

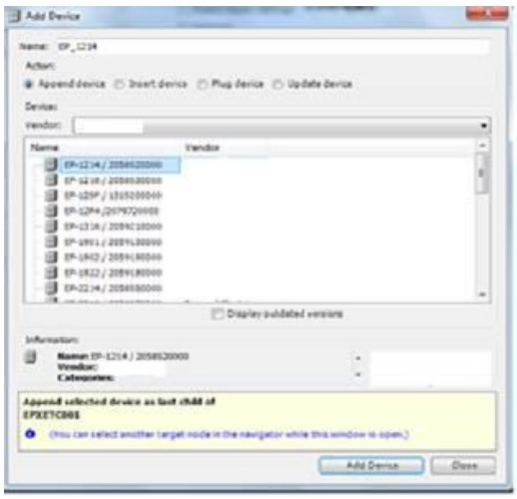

- **To change the module parameters**

  2. From the CodeSys software **Tree View**, select the **Network Adapter** and the **Startup parameters** tab.
  3. Right-click the **Name** column, select **Add** from the drop-down menu, select the parameter details to add, and click **OK**.

Figure 292

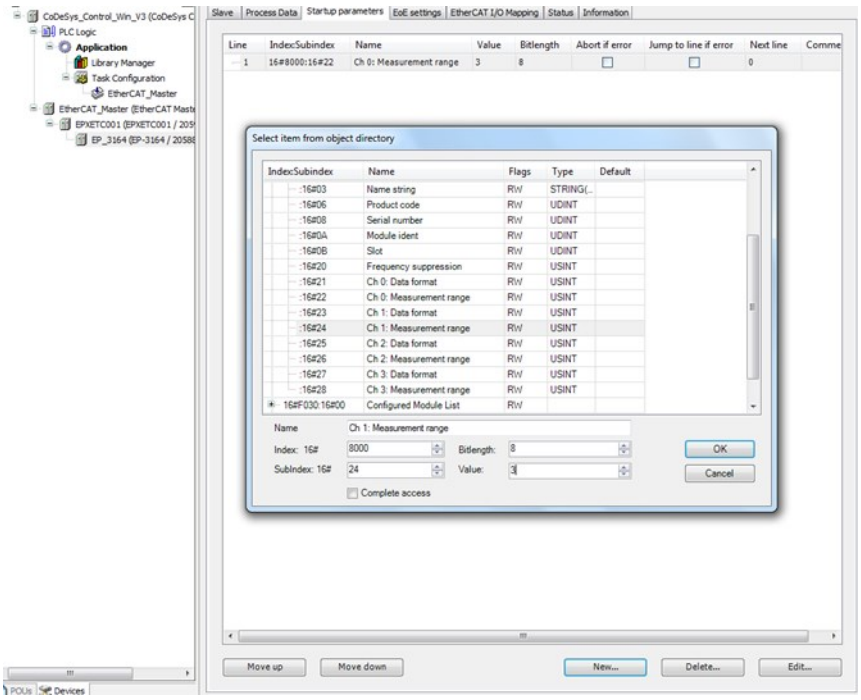

8.5 Configuring EPXMBE001/EPXMBE101

The Modbus/TCP Network Adapter, EPXMBE001/EPXMBE101, Modbus/TCP register mapping is automatically determined by the I/O modules included in the physical configuration. Network Adapter and I/O Module parameters are configured using the Network Adapter Web Server interface. Refer to Section *Modbus®TCP Network Adapter EPXMBE001/EPXMBE101* for more information on the automatic Modbus/TCP register mapping. Refer to Section 9: Web Server, for more information on editing the Web Server interface of the Network Adapter and I/O Module parameters.

8.6 Configuring EPXEIP001

The RSTi-EP EtherNet/IP network adapter EPXEIP001 is configured as Generic Ethernet Module under EtherNet/IP Scanner using the EDS (Electronic data sheet) file. Network Adapter and I/O Module parameters are configured using the Network Adapter Web Server interface. IP address of the network adapter and connection parameters should be configured. Refer to section, Process data EPXEIP001 for more details.

Adapter is configured under EtherNet/IP Scanner as Generic Ethernet module using the input assembly 101 and output assembly 102. The input and output data size for this assembly are 2 bytes.

For adding the RSTi-EP Input and/or Output modules to the Network adapter, calculation of total data size for input and output is required.

For Example- To add RSTi-EP Digital Input module EP-125F (Process Input Data size-2 Bytes) and RSTi-EP Digital Output module EP-225F (Process output Data size-2 Bytes), so the total input data size will be 4 bytes (2 bytes (for adapter) + 2 bytes (EP-125F)) and total output data size will be 4 bytes (2 bytes (for adapter) + 2 bytes (EP-225F)). So total input data size will be 4 bytes and total output data size will be 4 bytes for input assembly 101 and Output assembly 102 respectively.

To add more input and output modules, only the input and output size have to be incremented depending upon the data size of the module. Refer to section, data width of RSTi-EP IO modules under the EPXEIP001 EtherNet/IP adapter. Download the configuration and Read/Write the Cyclic data (in defined Registers).

In order to Read/Write the Acyclic data (device data, Diagnostics data, parameter data) , use the Programing block (if engineering Tool supports). To configure programming block, typically you need to provide below parameters depending upon the data read/write.

a) Message Type
b) Service Type
c) Class
d) Instance
e) Attribute
f) Source Element
g) Source Length
h) Destination Element
i) Communication Path

8.7 Configuring EP-5324

Updating the Firmware

Refer to section, ‘’Updating Firmware’’ & Update the firmware of the Network Adapter and that of the EP-5324 modules to the latest version.

Integrating & Parameterizing IO-Link port with PAC Machine Edition

The IO-Link ports are parameterized using the IO-Link master parameters. An overview of all parameters is presented in section “Modifiable Parameters of EP-5324”.

1. Profinet EPXPNS001/EPXPNS101

1. To configure EPXPNS001/EPXPNS101 with latest GSDML file refer to Section, “Configuring EPXPNS001/EPXPNS101”
2. Double-click the EP-5324 module in the module list.
3. The EP-5324 window opens.
4. Select the General Parameters tab

The list of all parameters is displayed.

Figure 293 Editing module parameters

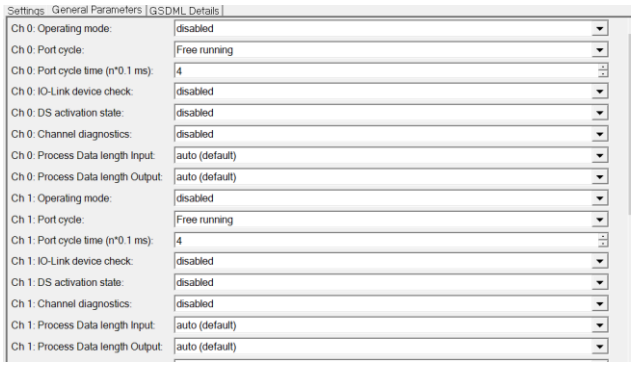

5. Click the parameter that you would like to change and
6. Set the “Operating mode” parameter of the IO-Link port to the value “IO-Link”.
7. Set each of the parameters “Process data length input “and “Process data length output” to the value “auto”.
8. Use this method to edit all of the parameters that you want to change.
9. Click OK to save the settings.
10. All settings only take effect once they have been
11. loaded into the component.

2. Profibus EPXPBS001

1. To configure EPXPBS001 with latest GSD file refer to Section, “Configuring EPXPBS001”
2. Double-click the EPXPBS001 module in the module list.

The EPXPBS001 window opens.

3. Double-click the EP-5324 module in the module list.
4. Click on the Properties
5. Select the General Parameters tab

The list of all parameters is displayed.

Figure 294 Editing module parameters

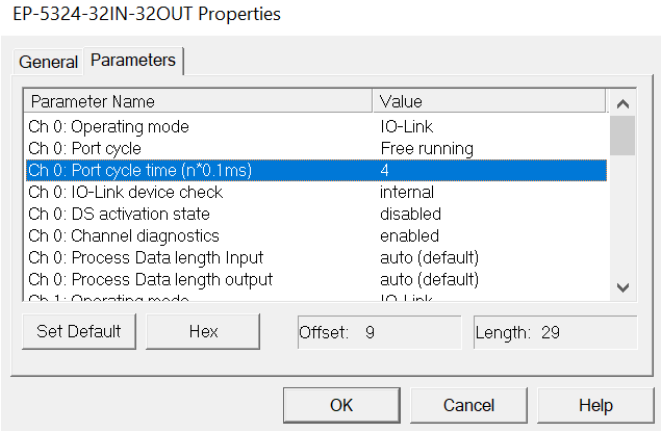

6. Click the parameter that you would like to change and
7. Set the “Operating mode” parameter of the IO-Link port to
8. the value “IO-Link”.
9. Set each of the parameters “Process data length input”
10. and “Process data length output” to the value “auto”.
11. Use this method to edit all of the parameters that you
12. want to change.
13. Click OK to save the settings.

All settings only take effect once they have been loaded into the component.

3. Modbus EPXMBE001/EPXMBE101

1. To configure the Modbus network adapter, Refer to Section, “Configuring EPXMBS001/EPXMBE101”

2. Use the RSTi-EP web server to parameterize IO-Link ports.
3. Start the RSTi-EP web server with default IP address 192.168.1.202.
4. Open the component view of the IO-Link module by clicking on the IO-Link module in the station overview.
5. Under parameters, click the channel whose parameters you want to change.

The parameters are displayed.

Figure 295 IO-Link master Parameterization

6. Set the “Operating mode” parameter of the IO-Link port to the value “IO-Link”.
7. Set the “Process data length input” parameter of the IO-Link port to the value “auto (default)”.
8. Set the “Process data length output” parameter of the IO-Link port to the value “auto (default)”.
9. Change the other parameters as required.
10. Each change is labelled with a green symbol until it has been applied. All changes are only saved when you click Apply changes.
11. All changes are reset when you click Restore.
12. Click Apply changes.
13. The changes are then transferred to the adapter and the green labels are removed. Alternatively, you can parameterize IO-Link ports using acyclic write accesses

Integrating IO-Link master with EtherCAT using TwinCAT

1. To configure the EtherCAT network adapter Refer to Section, “Configuring EtherCAT”
2. Open an existing project.
3. Establish an online connection to the EtherCAT master.
4. Right-click I/O.
5. Select Scan... and follow the configuration wizard.
6. All the EtherCAT slaves available on the network are added.

Parameterizing IO-Link port with TwinCAT

The IO-Link ports are parameterized via the parameters of the IO-Link master. An overview of all parameters can be found in section, ‘’’Modifiable Parameters of EP-5324’.

1. In the Editor window of the adapter, switch to Startup.
2. The current parameter setting is displayed. You can edit the parameter setting.
3. Double-click the parameter you want to edit.

   The Edit dialogue box will be opened.
4. Change the value in the Data text field.
5. Click OK.
6. Use this method to edit all of the parameters that you would like to change.

All settings only take effect once they have been loaded into the component.

EtherNet/IP EPXEIP001

To configure the EtherNet/IP network adapter Refer to Section, “Configuring EPXEIP001”

Parameterizing the IO-Link port with Ethernet/IP

First set the process data length of the IO-Link master to the required value. Setting the process data length requires that the adapter is restarted. In doing so, the parameter settings that were not saved in the adapter via the “Save module parameters”
function is reset to the factory settings. The IO-Link ports are parameterized via the parameters of the IO-Link master. An overview of all parameters can be found in section, ‘’Modifiable Parameters of EP-5324’’. Use the RSTi-EP web server to parameterize IO-Link ports.

1. Start the RSTi-EP web server.
2. Open the component view of the IO-Link module by clicking on the IO-Link module in the station overview.
3. Under parameters, click the channel whose parameters you want to change.

The parameters are displayed.

Figure 296 IO-Link master Parameterization

4. Set the “Operating mode” parameter of the IO-Link port to the value “IO-Link”.
5. Set the “Process data length input” parameter of the IO-Link port to the value “auto (default)”.
6. Set the “Process data length output” parameter of the IO-Link port to the value “auto (default)”.
7. Change the other parameters as required.
8. Each change is labelled with a green symbol until it has been applied. All changes are only saved when you click Apply changes.
9. All changes are reset when you click Restore.
10. Click Apply changes.
11. The changes are then transferred to the adapter and the green labels are removed. Alternatively, you can parameterize IO-Link ports using acyclic write accesses

Section 9: Web Server

With the web server, the RSTi-EP station is displayed on a connected PC. This allows you to carry out the following tasks prior to the complete commissioning of a system:

- Simulate the operation of the RSTi-EP station
- Query the status of each network adapter and module
- Display the parameters of network adapters and modules, and change them for testing purposes
- Access diagnostic information
- Operate the station in Force mode for testing purposes

With default settings each network adapter type offers web server access only via USB port. For that multiple IP addresses can be parametrized. Please note that this is a virtual DHCP server. To avoid network disruption no other network device with the same subnet ID should be connected to the PC.

Using network adapters for Ethernet-based fieldbus systems – recognizable by the RJ45 socket – web server access can be realized alternatively via Ethernet. This function must be enabled in the web server in the network adapters parameter setup. Any changes of the IP settings on either USB port or Ethernet port will not be effective until restarting the network adapter.

⚠ WARNING

- Explosion Risk - Prior to starting work, make sure that there is not a potentially explosive atmosphere.
- In Force mode, the system may be manipulated to such an extent that can result in life-threatening personal injury and damage to materials.
- Only use Force mode if you are very familiar with the connected system and know at all times the consequences that your actions will have.

⚠ CAUTION

Prior to connecting a PC, make sure that the RSTi-EP station has been grounded properly

9.1 Requirements

The RSTi-EP station must be completely assembled and supplied with voltage.

9.1.1 Operating System

The RSTi-EP web server is designed for operation with the Windows® XP, Windows 7 and Windows Vista operating systems.

9.1.2 Browser

The RSTi-EP web server can be used with the following browsers:

- Microsoft® Internet Explorer® 9, 10, 11
- Mozilla® Firefox 4.0 or higher
- Opera10.61 or higher
- Google® Chrome 9.0 or higher

9.1.3 Device Drivers

Download the driver files **usb8023.inf** and **rndis.inf** from
https://www.emerson.com/Industrial-Automation-Controls/support

Installing the USB Driver

Note: The USB port acts as a virtual DHCP Server. Please do not assign any IP addresses to other devices within the same subnet of the USB port (default 192.168.1.0), otherwise network failure might occur.

- **To install the USB driver**

  1. Start up your PC.
  1. Connect the PC to the network adapter using a USB cable (Type USB-A to USB Micro-B). The USB socket at the network adapter can be found behind the service flap.

Note: The USB cable can be a maximum of 2m in length. Extension cables must not be used.

  2. You receive the message that Windows cannot install the driver.
  3. To install the driver manually, open the **Device Manager**. Under **Other devices** the interface **RSTi-EP NA** displays.

Figure 297

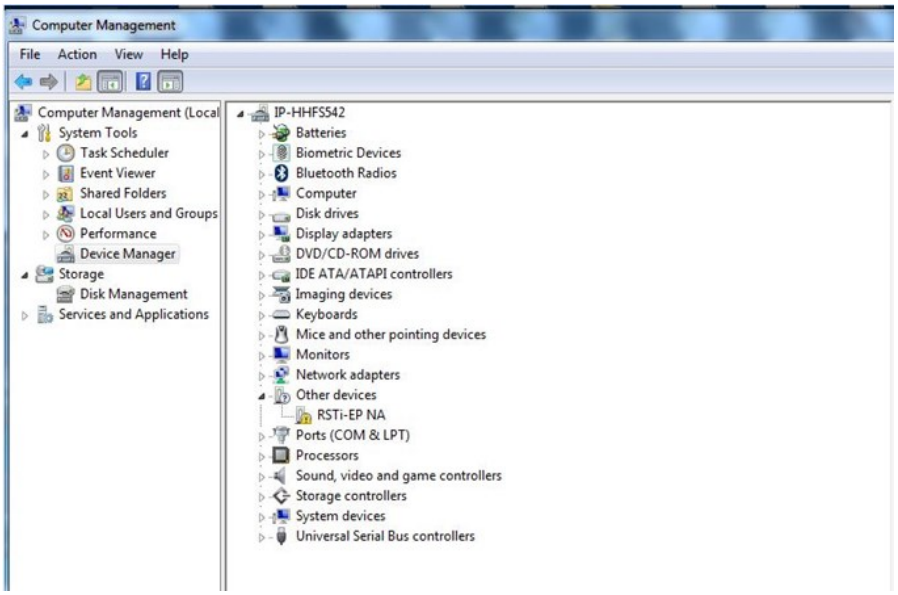

4. Right-click on the interface and select **Update driver software.** You will be asked if you would like to search for the driver software.
5. Select **Search for driver software on this computer**.

Figure 298

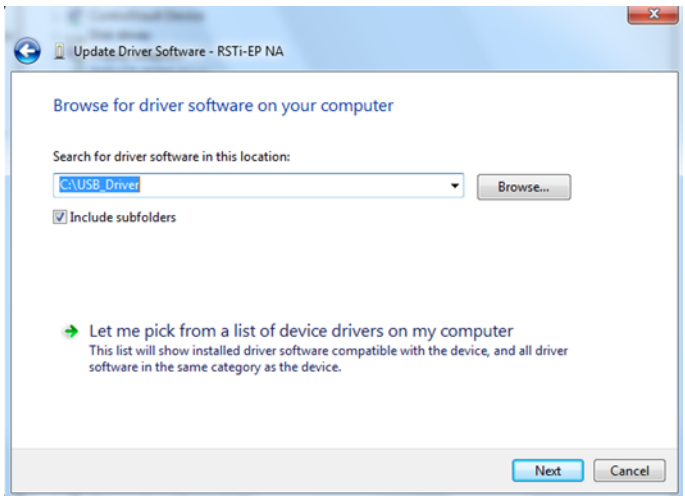

6. Click **Browse** and select the folder in which you have stored both **.inf** files and click **Next**.

Note: *There could be a security inquiry because the driver software does not have a signature. Nonetheless, continue with the installation.*

7. Follow the rest of the steps in the installation routine until the successful installation is confirmed. The driver displays in the **Device Manager** under **Network adapters.**

Figure 299

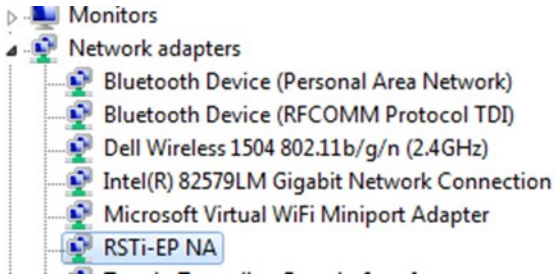

8. Close the **Device Manager.**

9.2 Starting the Web Server

Note: Simultaneous access via both interfaces to the webserver is not possible. Make sure that there is no USB connection before you start the access via Ethernet.

- **To start the web server**

1. Open an internet browser.
2. In the address line, enter the **IP address** of the network adapter (default: **192.168.1.202**).

9.2.1 Activating the Ethernet Socket

- **To activate the Ethernet socket**

7. In the station view, click on the **Network Adapter** and then **Parameters**.
3. Scroll down the list of parameters until you see the entry **Web server via Ethernet**.
4. Change the setting to **enabled**.

Figure 300

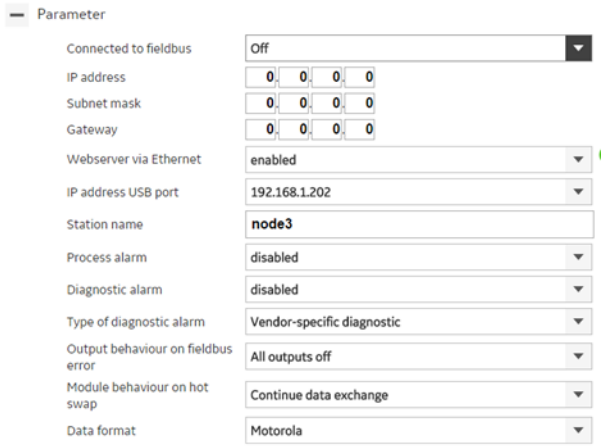

8. Enter the required **IP address** and **Subnet mask**.
9. Click **Apply Changes** to confirm.

10. Close the network adapter window and restart the network adapter. You can review the **IP address** in **Windows Control Panel**, in the **Network and Sharing Center.**
11. Under **Unidentified network**, click on **LAN connection**. The **LAN Connection Status** window displays.

Figure 301

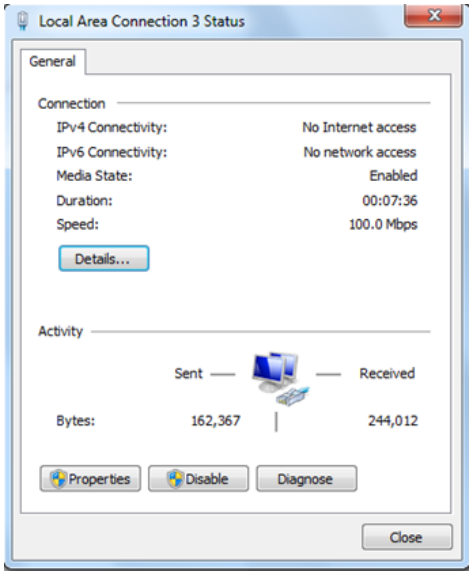

12. Click **Details**. The **Network Connection Details** window opens.

Figure 302

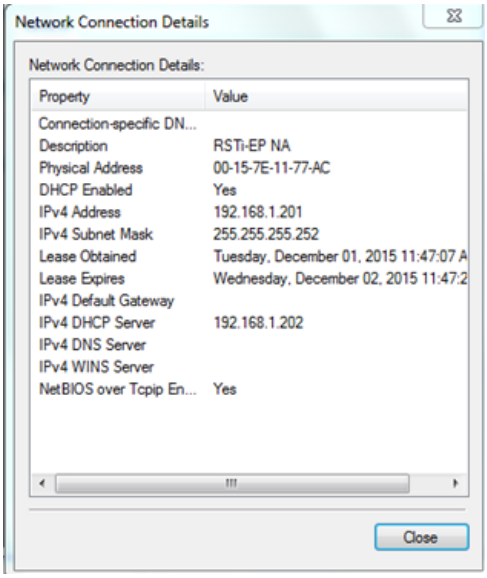

The IP address of the virtual LAN port (the USB connection) displays under **IPv4 DHCP server**. The standard IP address is **192.168.1.202**. The web server is started.

9.3 Setting up Registration Data and Password Protection

If you do not set up a user, all web server functions are always accessible to every user . As soon as you set up a user with password protection, users without a user ID will only have read-only rights. Write access is blocked for them, which means that they cannot do the following:

- Change parameters
- Operate the station in Force mode
- Load firmware updates

To set up registration data and password protection

1. When you start up the web server for the first time, you are prompted to enter the registration data. The Change login data window opens automatically. You can access this window later via the Network Adapter status dialog box (refer to Section, Displaying and Editing the Network Adapter Status):

Figure 303

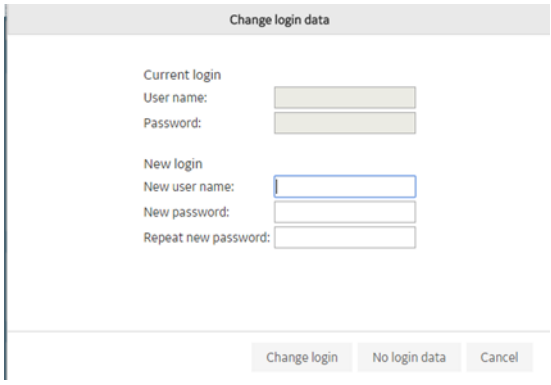

2. Enter the **User name** and **Password**.
3. To change the login data, enter the **new user** name and the **new password** twice, click on **change login**.
4. To deactivate password protection, do not enter any new data, but instead, click on **No login information.**
5. If you have changed the login data, you must log back in again afterwards.

Note: *A forgotten password can be overwritten if the network adapter gets restarted with no modules connected.*

The status data can be displayed at all time, regardless of the state of the field bus connection. Setup changes can only be stored while the field bus is not active.

After registration, the connected station is displayed with all its active modules.

Figure 304: Display of the Connected Station following Registration

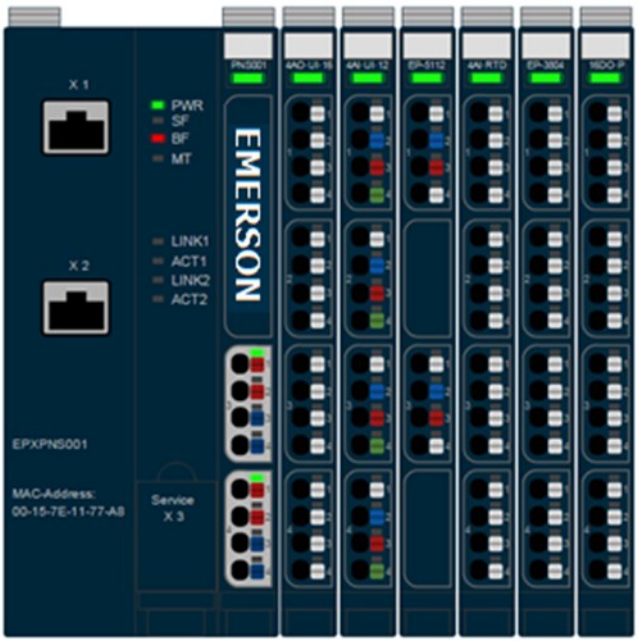

Note: The web server only registers modules that can communicate on the system bus. Empty slot modules and other passive modules (for example, AUX modules) are not registered by the web server and therefor are not displayed in the screen view. Because of this, the numbering of the modules in the web server view may deviate from the count in the actual station.

9.4 Navigation and Operating Instructions

9.4.1 Setting the Language

When the program is started, the web server attempts to start with the language set in your web browser. If this language is not supported by the web server, the program starts with the *English* setting.

New language versions are continually being developed and can be later installed by the user with separate language files.

- **To change the language:** Click **Language** and select the desired setting.

Figure 305

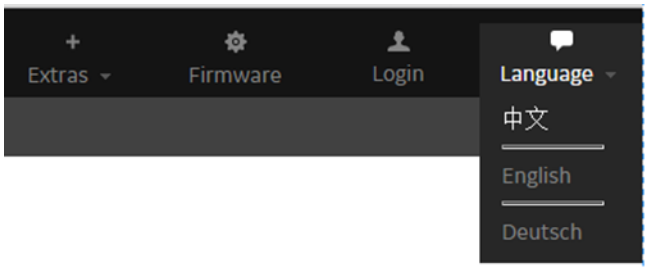

9.4.2 Zooming the View In/Out

- **To zoom the view in/out:** Click on the magnifying glass symbol to zoom in or out on the station's display.

Figure 306

9.4.3 Quick View (Tooltip) of Detailed Values

- **To display detailed channel values**: Move the cursor slowly over the station without clicking. The detailed values of the channel on top of which the cursor is presently situated display.

Figure 307: Tool-Tip Display of Module Details

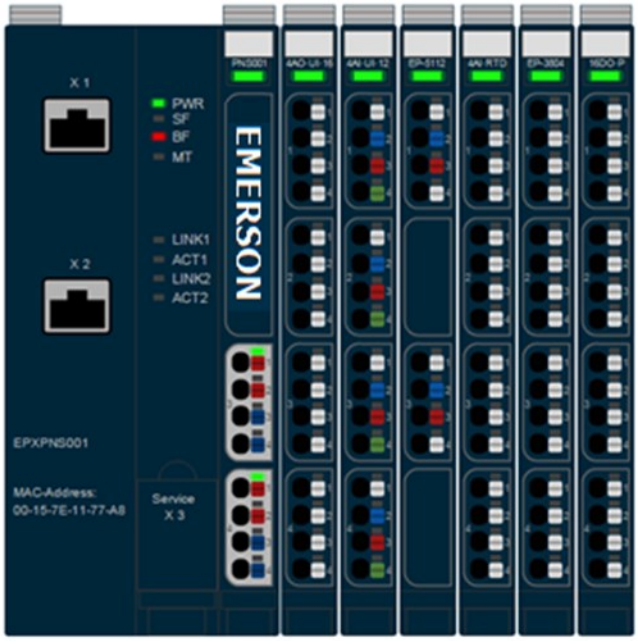

9.5 Displaying and Editing the Network Adapter Status

Note: These functions are only accessible when Force mode is not activated.

The status data can be displayed at all times, regardless of the state of the field bus connection. Setup changes can only be stored while the field bus is not active.

- **To display and edit the network adapter status:** Click on the **network adapter**. The **Network Adapter** Status dialog box displays.

Figure 308

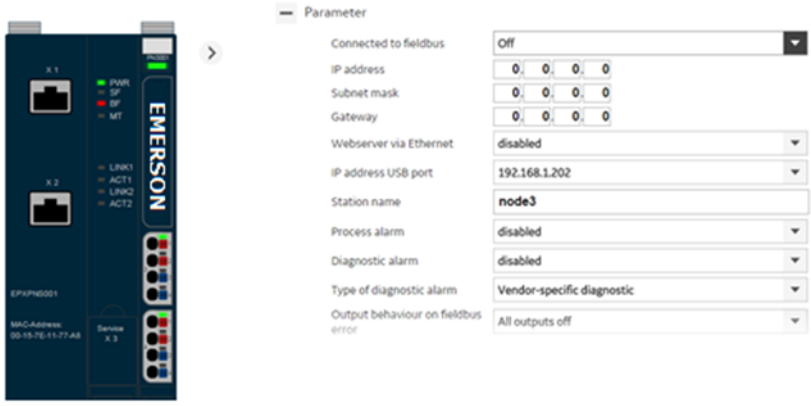

From here you can:

- Reset the network adapter to factory default settings

- Change the registration data and set up password protection to limit access to the web server
- Reset any changes that have been made
- Access the network adapter parameters
- Access the network adapter's datasheet (link to product designation)

9.5.1 Resetting the Web Server

You can undo all the changes that have been made since the last time that the web server was started.

Note: After a reset, the network adapter is restarted. All data not protected against power failure is reset.

- **To reset the web server**
  1. Click on the network adapter.
  2. From the Network Adapter Status dialog box, click Reset.

Figure 309

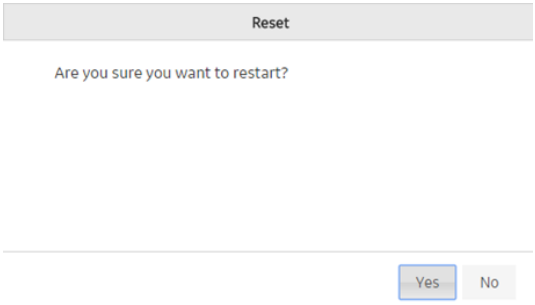

9.5.2 Resetting the Network Adapter to Factory Settings

This function allows you to set up the web server in its original state as at delivery. This also includes registration data and password protection.

- **To reset the network adapter to factory settings**
  1. Click on the **network adapter.**
  2. From the **Network Adapter Status** dialog box, click **Factory settings**.

Figure 310

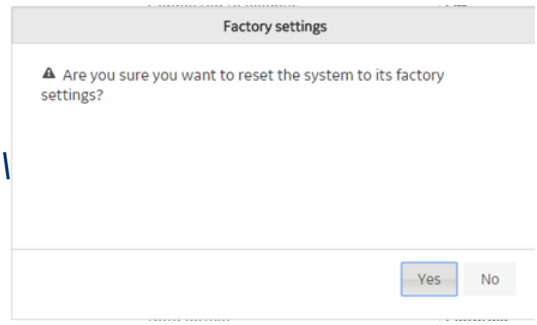

3. Click **Yes** to confirm that you would like to reset the network adapter to the factory settings.

9.5.3 Accessing Network Adapter Parameters

- **To access network adapter parameters:** Navigate to the **Network Adapter Status** dialog box and click **Parameters**. All the parameters are then listed in a new window.

Figure 311

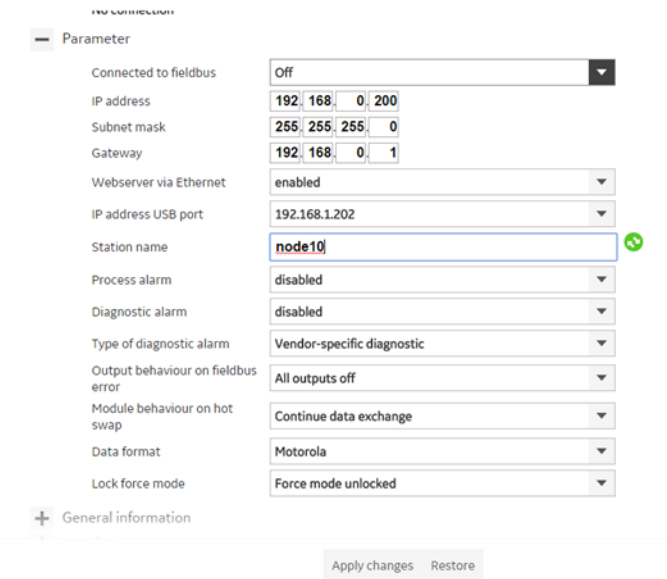

For parameters that can be edited, enter the changes in the entry fields or select alternative settings from a dropdown menu.

9.6 Displaying Module Data and Editing Parameters

Note: These functions are only accessible when Force mode is not activated.

Parameters can only be written when the field bus is not active.

- **To display module data and edit parameters**

1. Click on a **module** to view its properties. A window with all status values displays.

Figure 312

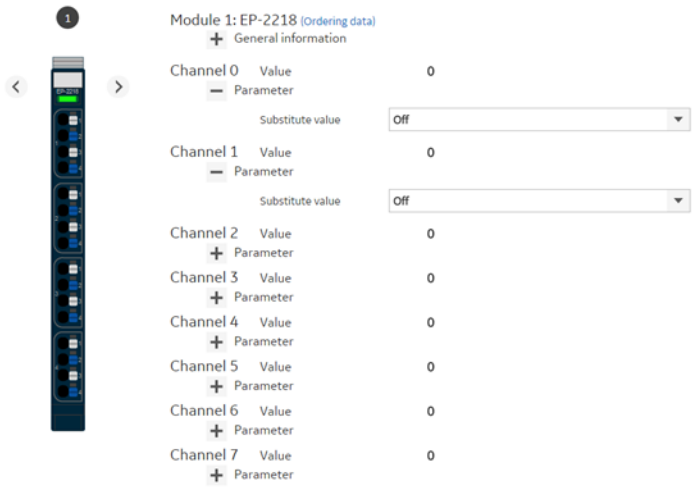

2. To open the datasheet for the module, click on the link next to **Name**.
3. To change individual parameters, click **Parameters**.

Figure 313

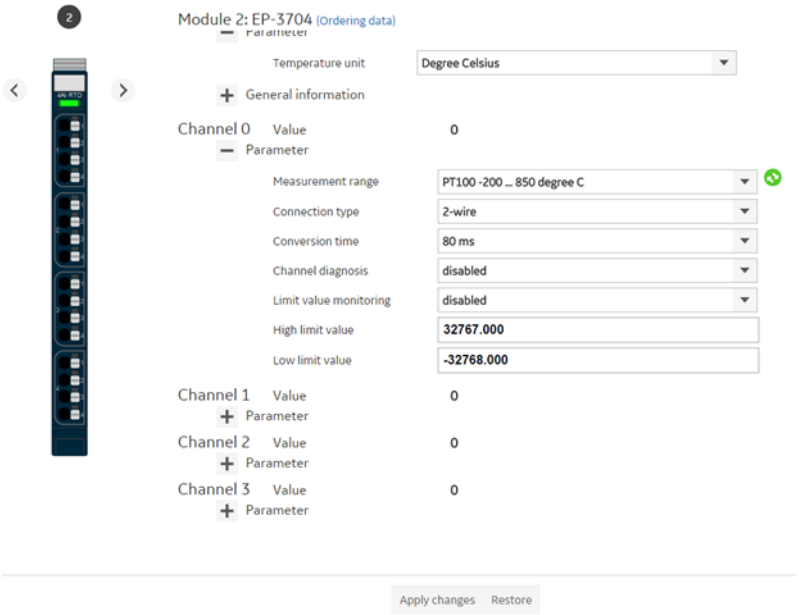

For parameters that can be edited, alternative settings are offered in a dropdown menu:

1. Select the **parameter** you would like to change.
2. Select the desired setting from the dropdown menu.
3. Click **Apply Changes** to save all changes and close the window.
4. Click **Close** to close the **Module Status** window.

9.7 Displaying Node Information

You can use this menu to display all of the Process data and Diagnostic data.

Figure 314

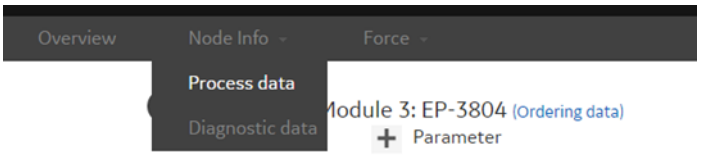

9.7.1 Displaying Process Data

- **To display process data**

  1. From the menu bar, click **Node Info** and then **Process Data.** The overview displays all modules and channels along with their current values; these values are continuously updated.

Figure 315

Process data

Channels	1 EP-2218	2 EP-3704	3 EP-3804	4 EP-225F	5 EP-4164	6 EP-3124
0	1	0	0	1	7.000 V	5.926 V
1	0	0	0	0	0.000	0.000
2	0	0	0	0	0.000	0.000
3	0	0	0	0	0.000	0.000
4	0			0		
5	0			1		
6	1			0		
7	0			0		
8				0		
9				0		
10				1		
11				0		
12				0		
13				0		
14				1		
15				0		

  2. Click **Close** to leave this view.

9.7.2 Displaying Diagnostic Data

- **To display diagnostic data**

  1. From the menu bar, click **Node Info** and then **Diagnostic data**. In the overview, all of the modules that have diagnostic messages.

Figure 316

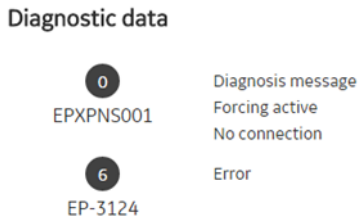

2. Click **Diagnostic message** to view the message.
3. Click **Close** to leave this view.

9.7.3 Web Server in Force Mode

⚠ WARNING

- In Force mode, the system may be manipulated to such an extent that can result in life-threatening personal injury and damage to materials.
- Only use Force mode if you are very familiar with the connected system and know at all times the consequences that your actions will have.

Note: If the force mode is activated during an established field bus connection a diagnose alarm is generated. Depending on parametrized alarm behavior the PLC can continue to transmit process data and the RSTi-EP station will process them for all unforced channels. However, forced channels will ignore any process data and behave according to forced values.

Safety related modules (EP-19xx) cannot be forced.

The force mode allows you to carry out functional tests or preconfigure the station prior to commissioning, even if sensors have not yet been connected.

To do so, you must change the operating mode of the web server.

- **To enable force mode:** From the menu bar, click on **Force** and **enable**.

Figure 317

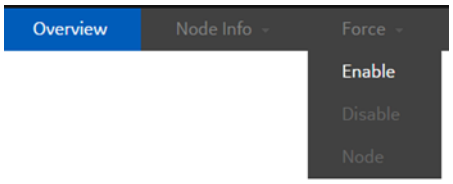

The web server is now in force mode.

Note: When force mode is activated, the screen display changes.

If the USB connection is interrupted, force mode is stopped immediately.

Figure 318

- **To force a module:** Click on the respective channel.
- **To accept an individual change:** Click **Apply changes**.
- **To accept all changes:** Click **OK**.

9.7.4 Open the Detail View of the Station in Force Mode

For a better survey we recommend changing to the detail view. In this view modules can be fade out and in, which is helpful, especially when working with larger stations.

- **To open the detail view in force mode**: From the menu bar, click **Force** and **Node**.

Figure 319

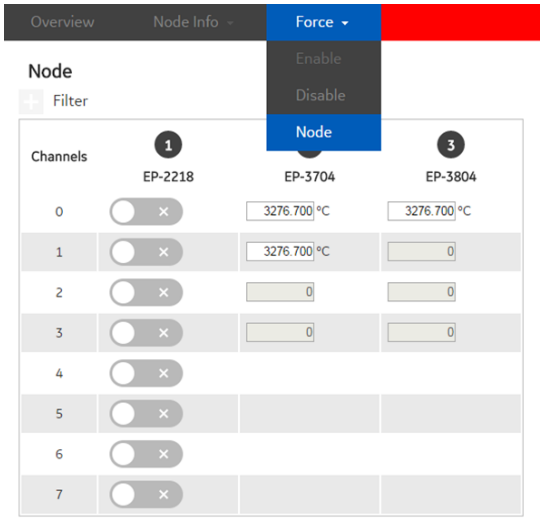

All active modules are displayed in the overview. The switchable channels are provided with a changeover switch.

9.7.5 Filtering the Module View

- **To view only the modules that you would like to force:** Click the Filter bar.

Figure 320

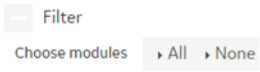

Displayed modules are highlighted in color in the filter bar, while hidden modules are displayed in white.

Figure 321

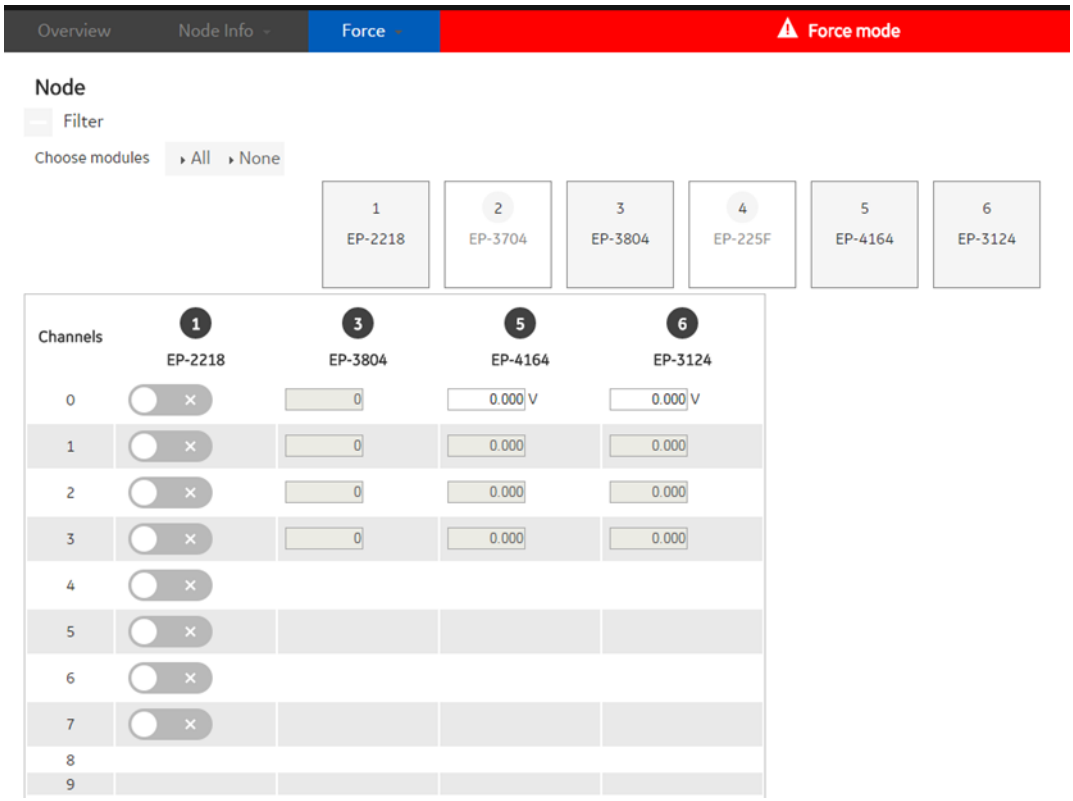

- **To display or hide modules:** From the filter bar, click on the module you would like to display or hide.

9.7.6 Resetting Filters

- **To display all modules again**: Click **Display all**.
- **To hide all modules**: Click **Hide all**.

9.7.7 Manually Switching Outputs (Forcing)

- **To switch a channel:** Click on the corresponding **module** in the Node display.

Figure 322

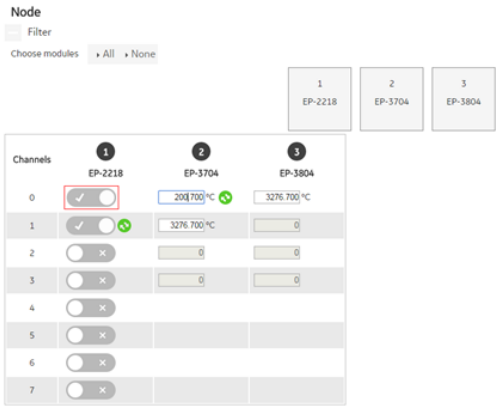

- **To accept an individual change:** Click on **Apply changes**.
- **To accept all changes:** Click **OK**.

9.7.8 Modules with Registers

Modules with registers (for example, counter modules and PWM modules) can be forced individually.

- **To force individual modules with registers**
  1. Click on the **channel** that needs to be forced, enter the required value, and click **Apply Changes**.

Figure 323

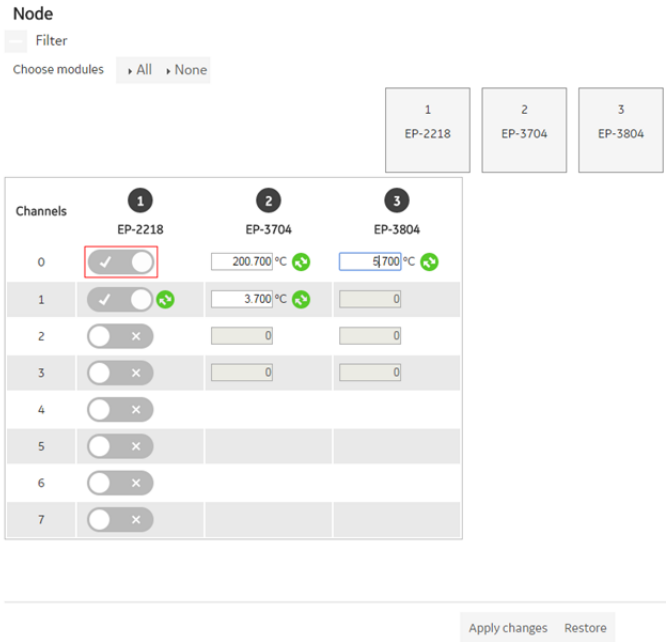

9.7.9 Ending/Deactivating Forced Operations

- To cancel a forced operation: Click Restore. All of the changes you made will not have any effect.
- To deactivate Force mode: Click Disable.

9.8 Updating Firmware

Before you can update the firmware, you must download the latest firmware file for each network adapter and each module from https://www.emerson.com/Industrial-Automation-Controls/support to your local PC.

Firmware files for the network adapter have the extension .bsc. For PROFINET network adapters, for instance, the file might be named EPXPNS001_.....xyz.bsc.

Firmware files for IO modules have the extension .bsm. For Analog input modules, for instance, the file might be named EP-3_.....xyz.bsm.

The language files will be in the format NA-....xyz.lng.

Note:

- You can determine for each module separately whether an update shall proceed.
- A firmware update cannot be undone. The old firmware in the network adapter/module is overwritten.
- Make sure that the power supply is not interrupted while the firmware files are being loaded
- To update firmware

1. Navigate to the web server and click **Firmware**. The **Firmware** window displays.

Figure 324

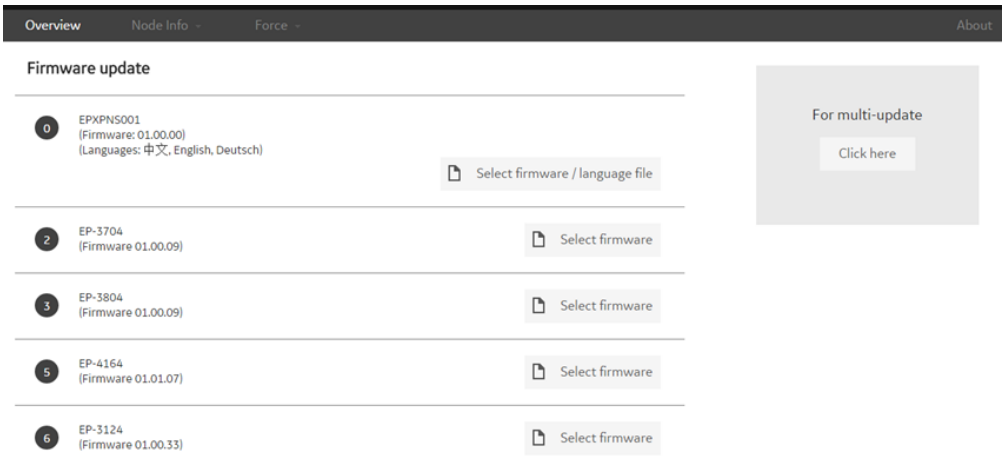

2. Click **Select firmware**, to select a firmware file for the required module.
3. Select the firmware file from the storage location on your computer and click **Open.**

Figure 325

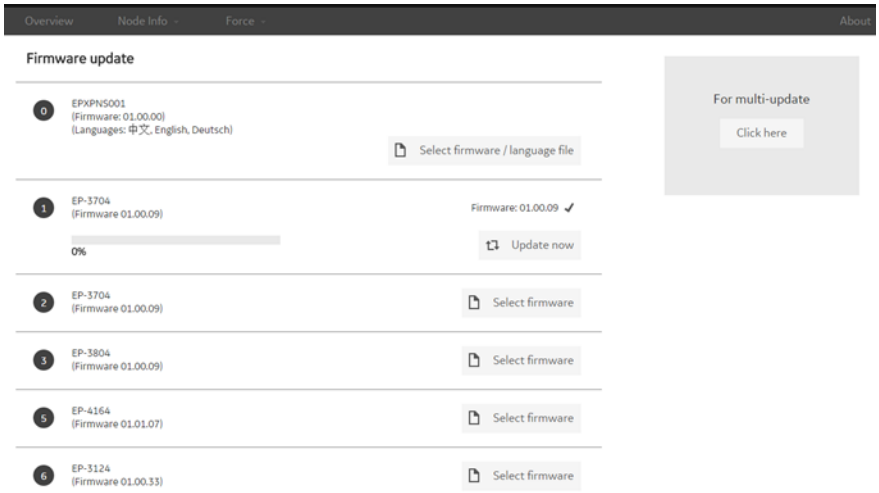

4. Click **Update now** to carry out a firmware update for individual modules in the RSTi-EP station.
5. You can also update multiple modules by clicking **For Multi update Click** here. Use the relevant firmware file for this purpose. Once the firmware file has been loaded, the **Options** area displays which modules can be updated with this file.

Figure 326

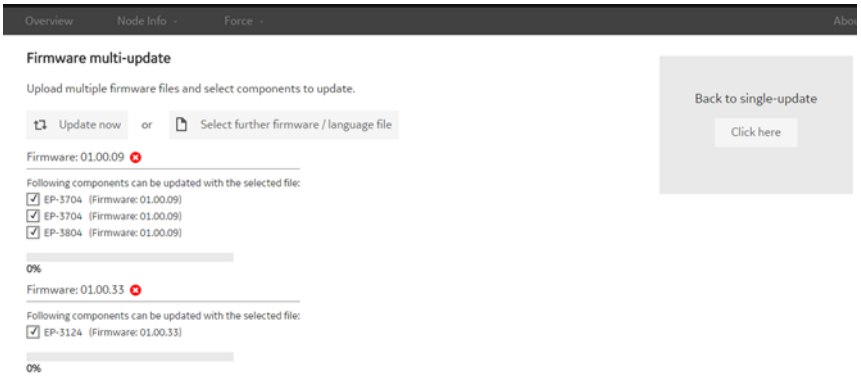

6. Click to check or uncheck the boxes so that only those modules that are to be updated are selected.
7. Once you have called up all the required firmware files and you have selected the required modules, click **Update now**.
8. Once the firmware is updated, a Firmware update message box recommending a restart of the network adapter displays.

Figure 327

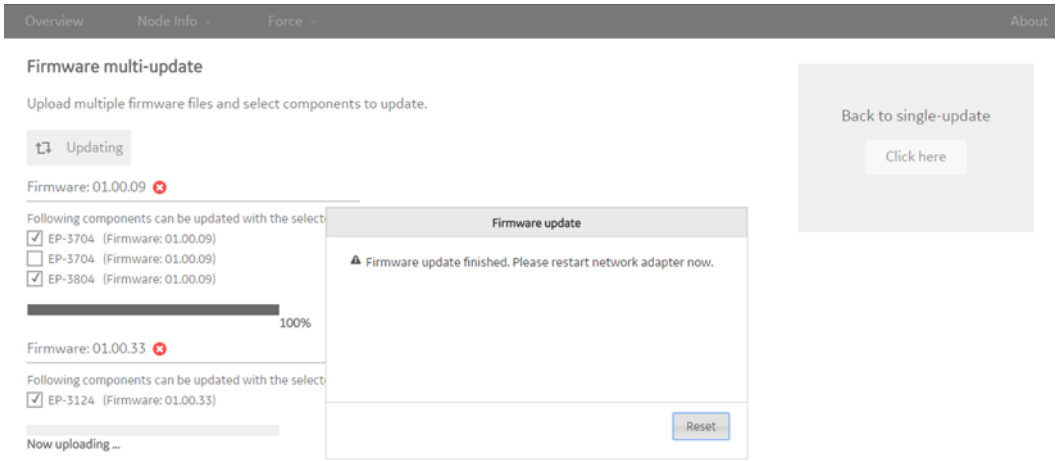

9. Click **Reset** and restart the network adapter (power reset) to complete the firmware update

⚠CAUTION

- Ensure that Power supply to the Network adapter is not interrupted during Firmware upgradation.
- If Power interruption occurs during firmware upgrade, follow the Recovery Mechanism for RSTi-EP Network adapter.

9.8.1 Recovery Mechanism for RSTi-EP Network adapter: -

1. Connect the Network adapter via micro USB connection to a PC.
2. The Network adapter should identify as a “Mass Storage Device”.
3. Copy the Firmware image (*.bsc) in the root directory of the “Mass Storage Device”.
4. The Network Adapter will automatically detect a fitting FW file and start the flashing process (indicated by a blinking).
5. When the LED stops blinking perform a power cycle.

9.9 Web Server About Help

- **To access web server help**: Click **About.**

Figure 328

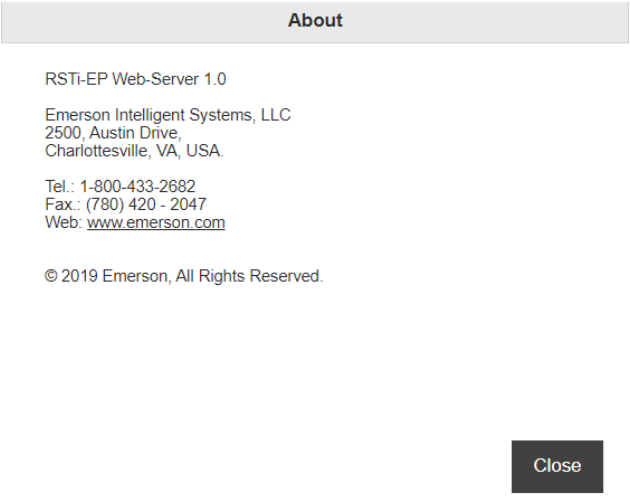

The program version of the web server is displayed in the help dialog box.

- **To open the manual for the RSTi-EP station**: Click on the link.

9.9.1 Exporting Log Data, Saving a Service File

In the event of problems and service cases, it may be helpful to save the current log data for the RSTi-EP station. This data can provide the service technician with valuable information about the malfunction.

- **To save a service file**
  1. Click on **Save service file.**
  2. Select a storage location on your PC for the service file (logdata.wmi) and click Save.
  3. Click Close to close the window

Section 10: Replacing Components

10.1 Removing/Replacing the Plug-in Unit

⚠ WARNING

Explosion Risk - Prior to starting work, ensure that there is not a potentially explosive atmosphere.

All work on the RSTi-EP station must be carried out with the power supply disconnected. Ensure that the place of installation (switch cabinet and such) has been disconnected from the power supply.

⚠ CAUTION

The components in the RSTi-EP series can be destroyed by electrostatic discharge. Ensure that personnel and work equipment are adequately earthed!

- To remove/replace the plug-in unit

1. Unlock the connector frame.

Figure 329: Unlocking the Connector Frame

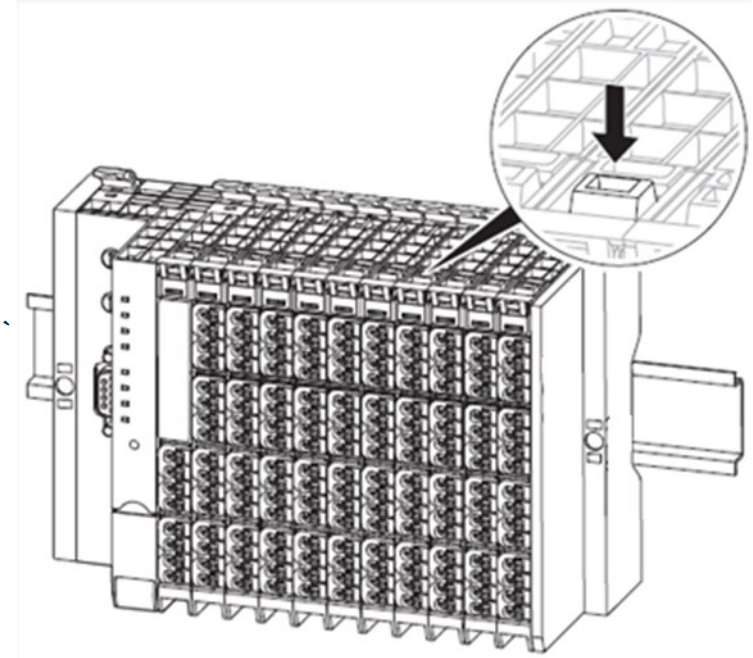

2. Swivel the plug-in unit with the cabling towards the front by 90°.

   Note: The plug-in unit can only be removed in this 90° position

3. Remove the plug-in unit by pulling it out in a straight, downward motion.

Figure 330: Removing the Plug-in Unit

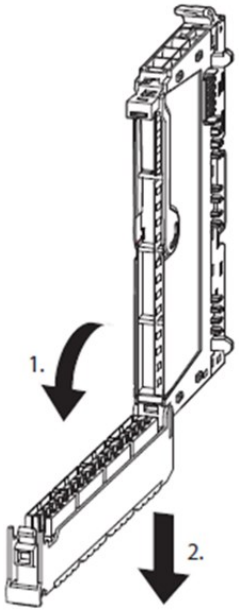

10.2 Replacing the Electronic Unit

⚠ WARNING

Explosion Risk - Prior to starting work, ensure that there is not a potentially explosive atmosphere.

⚠ CAUTION

- Pulling or inserting of an electronic unit might bring the inputs and outputs of all other modules temporarily into an undefined condition
- If the machine/system might be put into a dangerous state as a result of the removal of an electronic unit, a replacement can only be made once the machine/system is disconnected from the power.
- Only one electronic unit may be removed from the station at any one time. If multiple electronic units have to be replaced, this must be done consecutively.
- The components in the RSTi-EP series can be destroyed by electrostatic discharge. Ensure that personnel and work equipment are adequately grounded.

Note: Once an electronic unit is removed from a power-feed module, the inputs and outputs of the subsequent modules are no longer supplied with power. For EP-19xx modules, this is equivalent to triggering the connected safety equipment.

An electronic unit can be replaced while the system is powered up (no load) and in operation without having to disassemble the module. The station remains functional, and

there is no need to disconnect and restart it. When replacing the electronic unit, the wiring remains intact.

Operation and Behavior of I/O Module During Hot-swap

Behavior of Outputs on Field Bus Error	Module behavior on hot swap: Continue data exchange	Module behavior on hot swap: Behavior like field bus error
All outputs off	The I/O modules continue data exchange on hot swap of the module.	All of the outputs will be OFF until the module is replaced as per the original configuration.
Enable substitute value	The I/O modules continue data exchange on hot swap of the module.	All of the outputs will be replaced by the substitute value as per the configuration until the module is replaced as per the original configuration.
Hold last value	The I/O modules continue data exchange on hot swap of the module.	All the outputs will be retained prior to hot removal of the module until the module is replaced as per the original configuration.

⚠CAUTION

- During hot insertion or removal of IO modules, a transient Loss of Power up-to 500ms may occur on the network adapter and IO modules, during which all the outputs may drop to zero. This system behavior should be verified against the application requirements before hot insertion or removal of the IO module is done.
- Data shift occurs when a module is pulled out from a node where similar modules are sequentially configured. For example, when there are 6 RTD modules EP-3704 configured sequentially in the node, on hot-removing the module from the slot 4 would case the data from the module 5 and 6 to be reflected on variables configured for slot 4 and 5 with 'Loss of Module' reported for slot 6

To replace the electronic unit

1. Unlock the connector frame and open it as far as possible (at least to an angle of 90°).

Figure 331: Unlock the Connector Frame

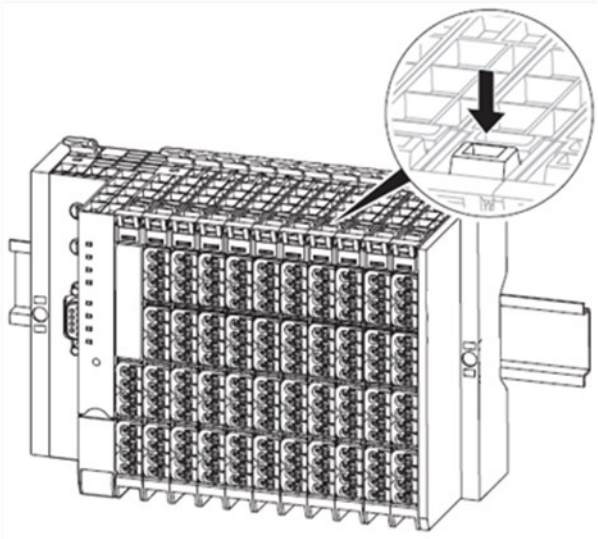

Figure 332: Open to at least 90°

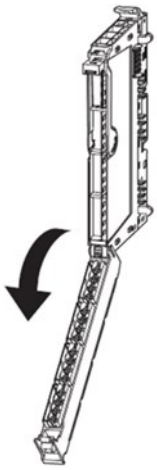

2. Lift the electronic unit removal lever and swivel it forwards by 90°.

Figure 333: Lift the Electronic Unit Removal Lever

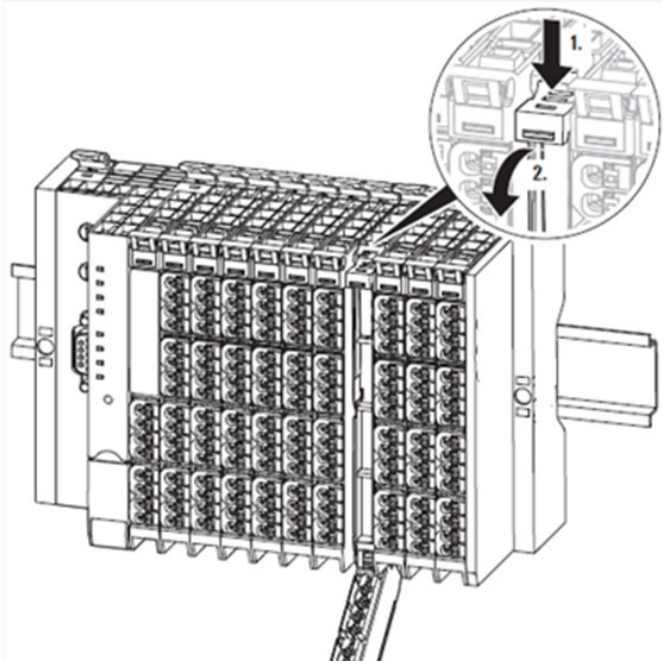

Figure 334: Swivel the Electronic Unit Removal Lever Forward

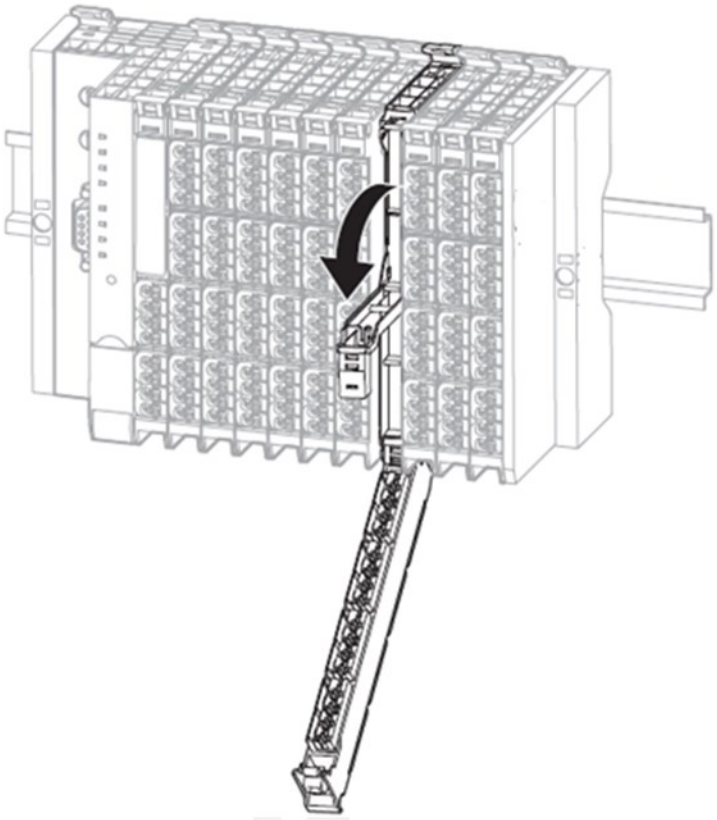

3. Using the removal lever, pull the electronic unit forwards and out.

Figure 335: Use the Removal Lever to Pull the Electronic Unit Forward

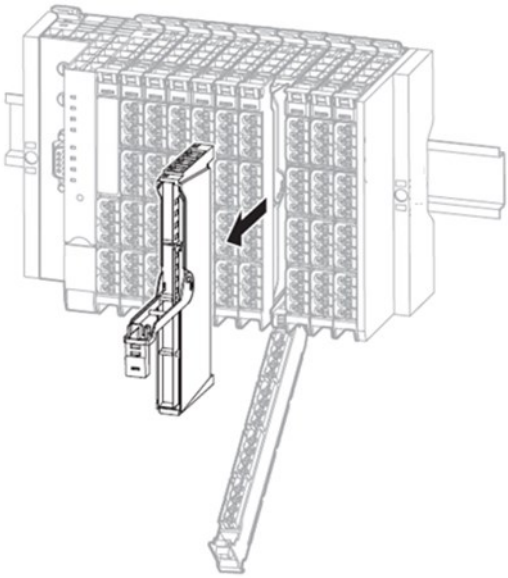

4. If the existing electronic unit was coded, insert the new coding pins into the coding seats located in the base module.
5. Hold the new electronic unit by the top and the bottom, and carefully slide it into the base module.

Note: *The electronic units are functionally coded so that they can only be inserted into the appropriate base module. If it is not possible to insert a new electronic unit into the base module, check if the combination is correct and if there is a possible mix-up.*

Figure 336: Slide the Electronic Unit into Position

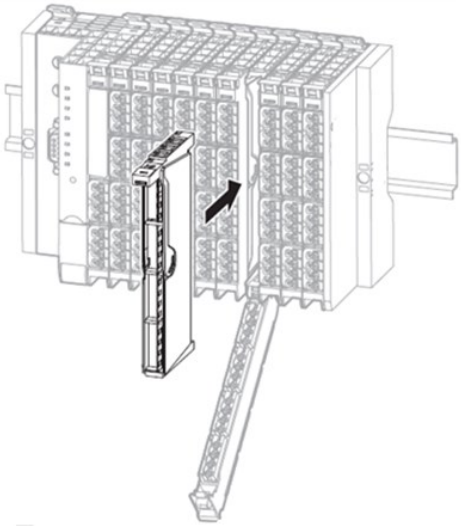

6. Fold the connector frame back so that it closes and clicks into place.
7. In case of replacement during operation: Pay attention to the collective error LED (SF) on the field-bus network adapter. Only when this doesn't light up any more,

the new electronic unit has been recognized and the next electronic unit is able to be pulled out.

10.3 Replacing an I/O Module

⚠ WARNING

- Explosion Risk - Prior to starting work, ensure that there is not a potentially explosive atmosphere.
- Dangerous contact voltage - Prior to removing modules, the RSTi-EP station must be completely de-energized (supply of the field bus network adapter and all external feed-in). Ensure that the place of installation (switch cabinet and so forth) has been disconnected from the power supply.

⚠ CAUTION

The components in the RSTi-EP series can be destroyed by electrostatic discharge. Ensure that personnel and work equipment are adequately earthed!

To remove an individual module from the station, all modules to the right of it and the termination kit must be moved by approximately 5 cm (2 in).

- To replace an I/O module

1. Unfasten the mounting screw on the right-hand end bracket.
2. Slide the end bracket and end plate approximately 5 cm (2 in) to the right or remove both parts from the DIN rail.
3. Open the release lever on the module furthest to the right.

Figure 337: Release the Lever on Rightmost Module

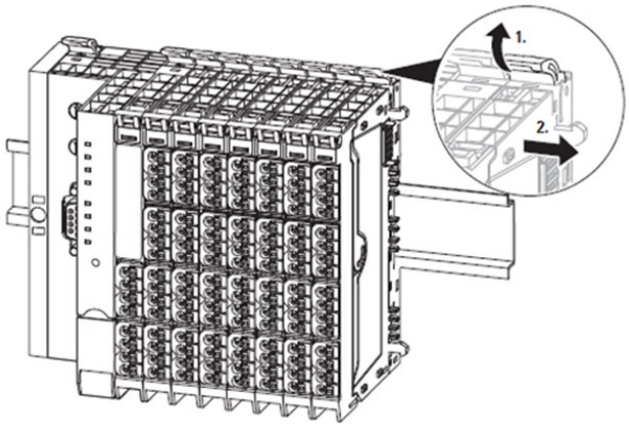

4. Slide the module on the DIN rail approximately 5 cm (2 in) to the right, push it onto the DIN rail and click the release lever into place.

5. Repeat the previous step for all other modules which are located to the right of the module being replaced: release, slide to the right, and click in once again.
6. Remove the plug-in unit of the module to be replaced as described in Section10.1, Removing/Replacing the Plug-in Unit.
7. Open the release lever for the module to be removed.

Figure 338: Open the Release Lever for the Module to be Removed

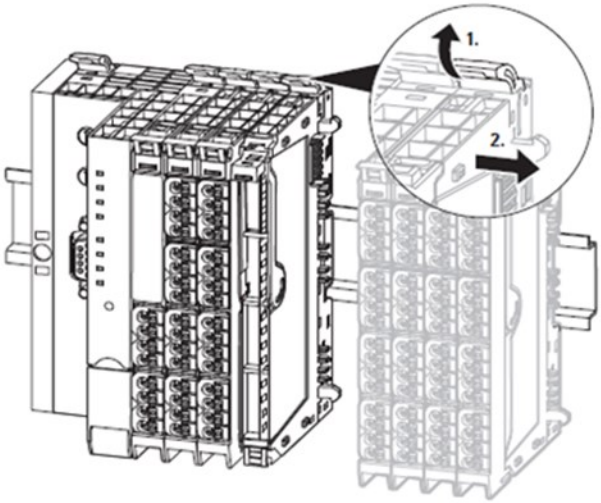

8. Slide the module to the right and remove it from the DIN rail.
9. Position the new module with its closed release lever on the DIN rail so that it clicks audibly into place.
10. Slide the module to the left until it audibly clicks into place against the neighboring module.
11. Return the modules that were slid away back into their original position: slide the modules to the left so that they audibly click into place on the new module.

    Note: After all the modules have been moved, make sure that they have all been clicked securely into place on the DIN rail.

12. Reassemble the end plate and end bracket.
13. Place the plug-in unit in a 90° position from below into the guideway of the base module on the new module.

    Note: The plug-in unit can only be inserted in this 90° position.

Figure 339: Swivel the Plug-in Unit Upwards

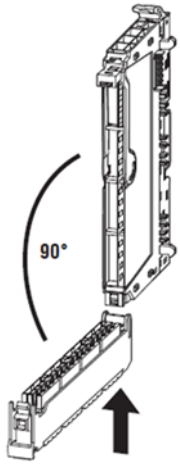

14. Swivel the plug-in unit upwards until the connector frame clicks into place.

10.4 Removing/Replacing Connectors

⚠ WARNING

Explosion Risk - Prior to starting work, ensure that there is not a potentially explosive atmosphere.

⚠ CAUTION

- In the event of the machine/system being put into a dangerous state as a result of the removal of a connector, a replacement can only be made once the machine/system is disconnected from the power.
- Risk of contact fire - Remove connectors only while they are load current free.
- The components in the RSTi-EP series can be destroyed by electrostatic discharge. Ensure that personnel and work equipment are adequately earthed!

- To remove/replace connectors

1. Open the connector frame and flip the plug-in unit open far enough that you can reach the connector.

Figure 340: Access the Connector

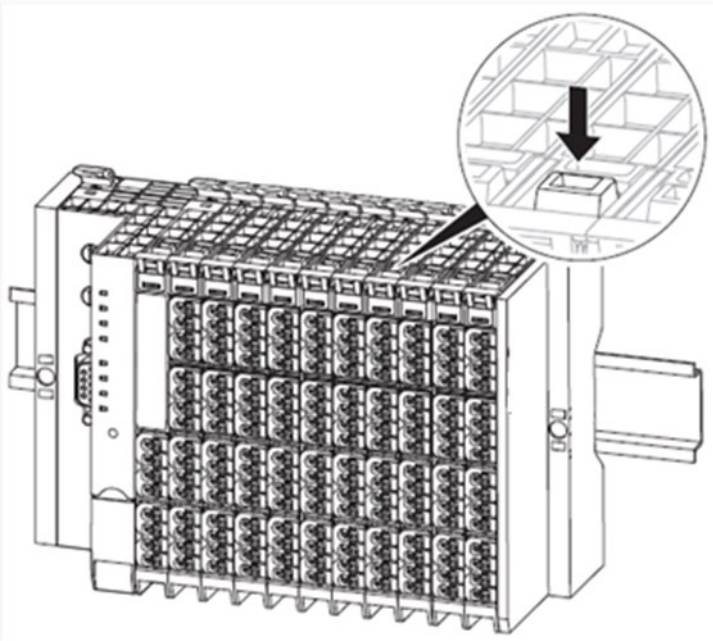

2. Press both sides of the connector together so that it can be slid off the frame.

Figure 341: Remove the Connector

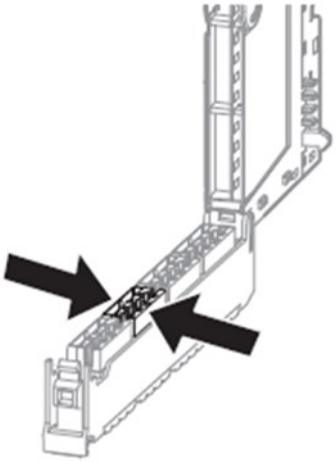

3. Remove the connector by pulling it off.
4. Insert the new connector in the frame so that it audibly clicks into place.
5. Swivel the plug-in unit upwards until the connector frame clicks into place

10.5 Removing/Replacing Cables

⚠ WARNING

Explosion Risk - Prior to starting work, ensure that there is not a potentially explosive atmosphere.

⚠ DANGER

Dangerous contact voltage - Prior to removing modules, the RSTi-EP station must be completely de-energized (supply of the field bus network adapter and all external feed-in). Ensure that the place of installation (switch cabinet and so forth) has been disconnected from the power supply.

⚠ CAUTION

- In the event of the machine/system being put into a dangerous state as a result of the removal of cables, a replacement can only be made once the machine/system is disconnected from the power.
- The components in the RSTi-EP series can be destroyed by electrostatic discharge. Ensure that personnel and work equipment are adequately grounded.
- The components in the RSTi-EP series can be destroyed by overcurrent. Potentials may only be disconnected either simultaneously or in the correct order. At the fieldbus network adapter as well as at power-feed modules, always disconnect the 24 V supply (red pusher) first, before you disconnect the GND potential (blue pusher).

To Remove / Replace Cable

1. Using a 3-mm (1/8th in) screwdriver, push in the pusher adjacent to the cable to be removed and pull the wire out.

Figure 342: Depress Release Mechanism with Screwdriver

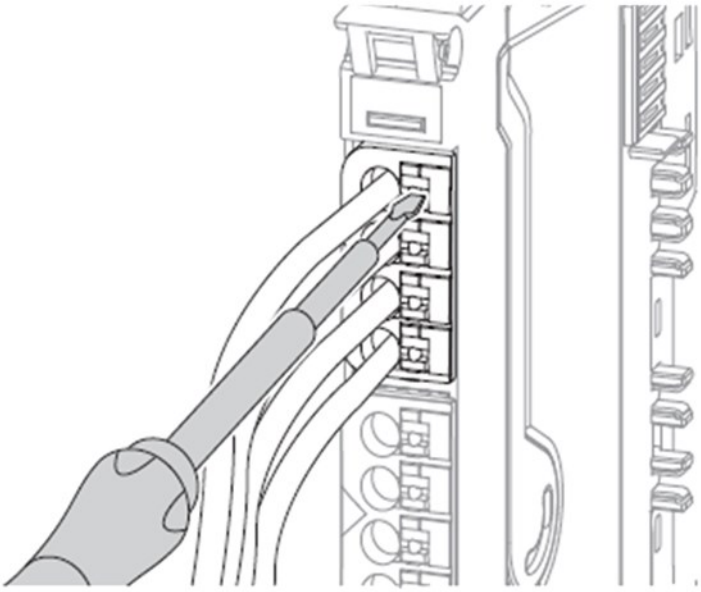

2. Release the pusher.
3. Insert the new wire into the opening. To do so, you do not need to push in the pusher.

Section 11: Disassembly and Disposal

11.1 Disassembling the RSTi-EP Station

⚠ WARNING

Explosion Risk - Prior to starting work, ensure that there is not a potentially explosive atmosphere.

⚠ CAUTION

Dangerous contact voltage - Carry out all disassembly work on the RSTi-EP station only when the power supply is disconnected. Ensure that the place of installation (switch cabinet and such) has been disconnected from the power supply.

- To disassemble the RSTi-EP station

1. Remove all cables and lines.
2. Remove the end bracket marker (if present).
3. Unfasten the mounting screw on the right-hand end bracket.
4. Slide the end bracket with the end plate to the right and remove both from the DIN rail.

   You can now disassemble the modules and the field-bus network adapter either individually or in groups of three to four modules.
5. Press all the release levers of a module group towards the mounting plate so that they click into place.
6. Slide the module group to the right and remove it from the DIN rail.
7. Repeat the above procedure for all remaining modules/ module groups.
8. To disassemble the field-bus network adapter, open both release levers and remove it from the DIN rail.
9. Unfasten the mounting screw on the left-hand end bracket and remove it.
10. Observe the instructions for proper disposal.

11.2 Disposing of the RSTi-EP Station

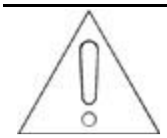

Attention

Products in the RSTi-EP series are subject to WEEE (EU Directive 2002/96 EC), which regulates the collection and recycling of electrical and electronic equipment. Ensure that disassembled products are properly disposed of.

When all RSTi-EP products reach the end of their life cycle, you can return them to Emerson, and we will arrange for their proper disposal. This also applies to countries outside the European Union.

- **To dispose of the RSTi-EP station:** Pack the products properly and send them to your responsible distributor.

You can find the address of your respective country representative in the annex and at https://www.emerson.com/Industrial-Automation-Controls/support.

Section 12: LED Indicators and Troubleshooting

Attention	In the event of a malfunction occurring on a RSTi-EP station, carry out the following recommended measures. If the malfunction cannot be fixed, send the affected product to Emerson(refer to the section, General Contact Information). Emerson does not assume any liability If the base or electronic module has been tampered with.

12.1 Fieldbus Network Adapters

EPXPBS001

Indicator	LED	Status	Recommended action
Power LED	PWR	**Green**: Supply voltage applied	
		Off, and the status LED of the module is **green**: Defective network adapter	Have the network adapter repaired or replaced The internal fuse was triggered due to an overload
		Off, and the module status LED is **off**: Improper supply voltage	Check the supply voltage
System Fault	SF	**Red**: Configuration error, or error in the network adapter, or error in a module, or there is a new diagnostic message	Check that the GSD file is up-to-date Check if the configured station setup matches the actual setup Read the diagnostic message with the web server or an engineering tool and determine which further actions to take
		Red flashing: Station in Force mode	
Bus Fault	BF	**Red**: No connection to the fieldbus	Check the fieldbus cable and the PLC configuration
		Red flashing: Configuration error, no connection to the control unit, or error in the parameter set or slave address error or firmware update is running	Check the fieldbus parameters and the PLC configuration Check that the GSD file is up-to-date Check if the configured station setup matches the actual setup
Maintenance Required	MT	**Yellow:** Error on the system bus or the fieldbus	Check that the modules have been snapped into place properly Check fieldbus wiring Check the fieldbus connection parameters
Input supply voltage	3.1	**Green**: Supply voltage for input current path > 18Vdc	
	3.2	**Red**: Supply voltage for input current path < 18Vdc	Check the supply voltage
	3.4	**Red**: Internal fuse defective	Replace the network adapter
Output supply voltage	4.1	**Green**: Supply voltage for output current path > 18Vdc	
	4.2	**Red:** Supply voltage for output current path < 18Vdc	Check the supply voltage
	4.4	**Red**: Internal fuse defective	Replace the network adapter

EPXPNS001/EPXPNS101

Indicator	LED	Status	Recommended action
Power LED	PWR	**Green**: Supply voltage	
		Off, and the status LED of the module is **green**: Defective network adapter	Have the network adapter repaired or replaced The internal fuse was triggered due to an overload
		Off, and the module status LED is off: Improper supply voltage	Check the supply voltage

Indicator	LED	Status	Recommended action
System Fault	SF	**Red:** Configuration error, or error in the network adapter, or error in a module, or there is a new diagnostic message	Check that the GSDML file is up-to-date Check if the configured station setup matches the actual setup Read the diagnostic message with the web server or an engineering tool and determine which further actions to take
		Red flashing: Station in Force mode	
Bus Fault	BF	**Red**: No connection to the fieldbus	Check the fieldbus cable and the PLC configuration
		Red flashing: Configuration error, no connection to the control unit, or error in the parameter set	Check the fieldbus parameters and the PLC configuration Check that the GSD file is up-to-date Check if the configured station setup matches the actual setup
Maintenance Required	MT	**Yellow:** Error on the system bus	Check that the modules have been snapped into place properly
Connection	Link 1	**Green:** Connection established between port 1 of the network adapter and another field device	
		Off: No connection	Check the connection to the next participant and the fieldbus cable
Active	ACT 1	**Yellow flashing**: Data being exchanged on port 1	
Connection	Link 2	**Green**: Connection established between port 2 of the network adapter and another field device	
		Off: No connection	Check the connection to the next participant and the fieldbus cable
Active	ACT 2	**Yellow flashing**: Data being exchanged on port 2	
Input supply voltage	3.1	**Green**: Supply voltage for input current path > 18Vdc	
	3.2	**Red:** Supply voltage for input current path < 18Vdc	Check the supply voltage
	3.4	**Red:** Internal fuse defective	Replace the network adapter
Output supply voltage	4.1	**Green**: Supply voltage for output current path > 18Vdc	
	4.2	**Red:** Supply voltage for output current path < 18Vdc	Check the supply voltage
	4.4	**Red**: Internal fuse defective	Replace the network adapter

EPXETC001

Indicator	LED	Status	Recommended action
Power LED	PWR	**Green**: Supply voltage	
		Off, and the status LED of the module is green: Defective network adapter	Have the network adapter repaired or replaced The internal fuse was triggered due to an overload
		Off, and the module status LED is off: Improper supply voltage	Check the supply voltage
System Fault	SF	**Red**: Configuration error, or error in the network adapter, or error in a module, or there is a new diagnostic message	Check that the ESI configuration file is up-to-date Check if the configured station setup matches the actual setup Read the diagnostic message with the web server or an engineering tool and determine which further actions to take
		Red flashing: Station in Force mode	
Bus Fault	BF	**Red**: No connection to the fieldbus	Check the fieldbus cable and the PLC configuration
		Red flashing: Configuration error, no connection to the control unit, or error in the parameter set	Check the fieldbus parameters and the PLC configuration Check that the ESI file is up-to-date Check if the configured station setup matches the actual setup
Maintenance Required	MT	**Yellow**: Error on the system bus	Check that the modules have been snapped into place properly
Connection/Active	L/A IN	**Off**: No connection	Check the fieldbus cable
		Green: Connection established between port 1 of the network adapter and another field device	
		Green flashing: Data being exchanged on port 1	
Connection/Active	L/A OUT	Off: No connection	Check the fieldbus cable
		Green: Connection established between port 2 of the network adapter and another field device	
		Green flashing: Data being exchanged on port 2	
Network Adapter State	RUN	**Off**: Network adapter in INIT state	
		Green flashing: Network adapter in PRE-OPERATIONAL state	
		Green lights up briefly: Network adapter in SAFE OPERATIONAL state	
		Green: Network adapter in OPERATIONAL state	
Internal Fault	ERROR	**Red**: Critical error in the network adapter	Check that the ESI file is up-to-date. Check if the configured station setup matches the actual setup
		Red lights up briefly: Error in the network adapter application	

Indicator	LED	Status	Recommended action
		Red lights up briefly twice: Output of the sync manager watchdog out-of-date	Check that the network adapter firmware is up-to-date. Compare the master cycle time with the time set up on watchdog timer
		Red flashing: Configuration error	
Input Supply Voltage	3.1	**Green**: Supply voltage for input current path > 18Vdc	
	3.2	**Red**: Supply voltage for input current path < 18Vdc	Check the supply voltage
	3.4	**Red**: Internal fuse defective	Replace the network adapter
Output Supply Voltage	4.1	**Green**: Supply voltage for output current path > 18Vdc	
	4.2	**Red**: Supply voltage for output current path < 18Vdc	Check the supply voltage
	4.4	**Red**: Internal fuse defective	Replace the network adapter

EPXMBE001/EPXMBE101

Indicator	LED	Status	Recommended action
Power LED	PWR	**Green**: Supply voltage	
		Off, and the status LED of the module is **green**: Defective network adapter	Have the network adapter repaired or replaced The internal fuse was triggered due to an overload
		Off, and the module status LED is off: Improper supply voltage	Check the supply voltage
System Fault	SF	**Red**: Configuration error, or error in the network adapter, or error in a module, or there is a new diagnostic message	Check if the configured station setup matches the actual setup Read the diagnostic message with the web server or an engineering tool and determine which further actions to take
		Red flashing: Station in Force mode	
Bus Fault	BF	**Red**: No connection to the fieldbus	Check the fieldbus cable and the PLC configuration
		Red flashing: Configuration error, no connection to the control unit, or error in the parameter set	Check if the configured station setup matches the actual setup Check the master configuration and try again to establish connection
Maintenance Required	MT	**Yellow**: Error on the system bus or the fieldbus	Check that the modules have been snapped into place properly Check the fieldbus cabling Check the fieldbus connection parameters
Connection/Active	L/A X1	**Green**: Connection established between port 1 of the network adapter and another field device	
		Green flashing: Data being exchanged on port 1	
		Off: No connection	Check the connection to the next participant and the fieldbus cable

Indicator	LED	Status	Recommended action
Connection/Active	L/A X2	**Green**: Connection established between port 2 of the network adapter and another field device	
		Green flashing: Data being exchanged on port 2	
		Off: No connection	Check the connection to the next participant and the fieldbus cable
Input Supply Voltage	3.1	**Green**: Supply voltage for input current path > 18Vdc	
	3.2	**Red**: Supply voltage for input current path < 18Vdc	Check the supply voltage
	3.4	**Red**: Internal fuse defective	Replace the network adapter
Output Supply Voltage	4.1	**Green**: Supply voltage for output current path > 18Vdc	
	4.2	**Red**: Supply voltage for output current path < 18Vdc	Check the supply voltage
	4.4	**Red**: Internal fuse defective	Replace the network adapter

EPXEIP001

Indicator	LED	Status	Recommended action
Power LED	PWR	**Green**: Supply voltage	
		Off, and the status LED of the module is **green**: Defective network adapter	Have the network adapter repaired or replaced The internal fuse was triggered due to an overload
		Off, and the module status LED is off: Improper supply voltage	Check the supply voltage
System Fault	SF	**Red**: Configuration error, or error in the network adapter, or error in a module, or there is a new diagnostic message	Check if the configured station setup matches the actual setup Read the diagnostic message with the web server or an engineering tool and determine which further actions to take
		Red flashing: Station in Force mode	
Bus Fault	BF	**Red**: No connection to the fieldbus	Check the fieldbus cable and the PLC configuration
		Red flashing: Configuration error, no connection to the control unit, or error in the parameter set	Check if the configured station setup matches the actual setup Check the master configuration and try again to establish connection
Maintenance Required	MT	**Yellow**: Error on the system bus or the fieldbus	Check that the modules have been snapped into place properly Check the fieldbus cabling Check the fieldbus connection parameters
Connection/Active	L/A X1	**Green**: Connection established between port 1 of the network adapter and another field device	
		Green flashing: Data being exchanged on port 1	

Indicator	LED	Status	Recommended action
		Off: No connection	Check the connection to the next participant and the fieldbus cable
Connection/Active	L/A X2	**Green**: Connection established between port 2 of the network adapter and another field device	
		Green flashing: Data being exchanged on port 2	
		Off: No connection	Check the connection to the next participant and the fieldbus cable
Module Status	MS	**Red**: More than one module does not fit the start-up configuration (or no fieldbus connection)	Check if the configured station setup matches the actual setup Check the master configuration and try again to establish connection
		Red flashing: One module does not fit the start-up configuration or there is a diagnostic report on at least one module	Check if the configured station setup matches the actual setup Check the master configuration and try again to establish connection
		Green: Ready for operation	
		Green flashing: Network Adapter not configured	Check the adapter configuration and try again to establish connection
		Red/Green flashing: LED Self-test during Start	
Network Status	NS	**Off:** At least one EtherNet/IP connection is established	
		Yellow: Address conflict or no IP address configured	Assign address via web server or DHCP/BootP
		Yellow flashing (1 Hz): valid IP address but no Ether-Net/IP connection established	Check the network cable Check the PLC configuration
		Yellow flashing (4 Hz): Connection timeout on and exclusive owner	Check the network cable Check the PLC configuration
Input Supply Voltage	3.1	**Green**: Supply voltage for input current path > 18Vdc	
	3.2	**Red**: Supply voltage for input current path < 18Vdc	Check the supply voltage
	3.4	**Red**: Internal fuse defective	Replace the network adapter
Output Supply Voltage	4.1	**Green**: Supply voltage for output current path > 18Vdc	
	4.2	**Red**: Supply voltage for output current path < 18Vdc	Check the supply voltage
	4.4	**Red**: Internal fuse defective	Replace the network adapter

12.2 I/O Modules

Module	LED	Status	Recommended action
Digital Input Modules			
EP-1214 EP-1218	Status LED	**Red:**	– Check that the module has been snapped into place properly

Module	LED	Status	Recommended action
EP-1318 EP-125F EP-12F4 EP-1804 EP-153F		– Error in supply voltage at input current path – Communication error on the system bus – There is a new diagnostic message	– Check the supply voltage
Digital Output Modules			
EP-2214 EP-2614 EP-2634 EP-2218 EP-225F EP-291F	Status LED	**Red:** – Error in supply voltage at output current path – Communication error on the system bus – There is a new diagnostic message – At least one output overloaded	– Check that the module has been snapped into place properly – Check the supply voltage – Eliminate the overload/short-circuit
Digital Relay Output Modules			
EP-2714 EP-2814	Status LED	**Red**: – Error in supply voltage at output current path – Communication error on the system bus – There is a new diagnostic message	– Check that the module has been snapped into place properly – Check the supply voltage
Digital Counter SSI and Serial Communication Modules			
EP-5111 EP-5112 EP-5212 EP-5261 EP-5311	Status LED	**Red:** – Error in supply voltage at input current path – Communication error on the system bus – There is a new diagnostic message	– Check that the module has been snapped into place properly – Check the supply voltage
Pulse-width Modulation Modules			
EP-5422 EP-5442	Status LED	**Red:** – Error in supply voltage at output current path – Communication error on the system bus – There is a new diagnostic message – At least one output overloaded	– Check that the module has been snapped into place properly – Check the supply voltage – Eliminate the overload/short-circuit
IO-Link Communication Module			
EP-5324	Statue LED	**Red:** – Error in supply voltage at input current path – Communication error on the system bus – Configuration error – There is a new diagnostic message	– Check that the module has been snapped into place properly – Check the supply voltage – Check the Configuration
	Channel LED 1.1 ... 4.1	**Yellow:**	

Module	LED	Status	Recommended action
		– Status COM1 ... COM 4	
	1.2 ... 4.2	**Red:** – Error IO-Link port 1 ... Error IO-Link port 4	– Check the supply voltage – Check the Configuarion
	1.4 ... 4.4	**Yellow:** – Status DI 0	
Analog Input Modules			
EP-3124 EP-3164 EP-3264 EP-3664	Status LED	**Red:** – Error in supply voltage at input current path – Communication error on the system bus – There is a new diagnostic message – Channel error – Firmware error	– Check that the module has been snapped into place properly – Check the supply voltage – Check channel error – Check firmware, update firmware as necessary
		Status LED off and all other LEDs red: Error in the bus network adapter power supply	– Check the bus network adapter supply voltage
	Channel LED 1.1-4.1	**Red:** – Input signal outside permissible range System bus cannot be accessed (for example, caused by interruption of the bus network adapter power supply)	– Check the input signal – Check the bus network adapter supply voltage
EP-3368 EP-3468	Status LED	**Red:** Error in supply voltage at output current path Communication error on the system bus There is a new diagnostic message At least one output overloaded	– Check that the module has been snapped into place properly – Check the supply voltage – Eliminate the overload/short-circuit
	Channel LED 1.1-8.1	**Red:** – Channel error	– Check channel error
EP-3804 EP-3704	Status LED	**Red:** – Error in supply voltage at input current path – Communication error on the system bus – There is a new diagnostic message – Channel error – Firmware error	– Check that the module has been snapped into place properly – Check the supply voltage – Check channel error – Check firmware, update firmware as necessary
		Status LED off and all other LEDs red: Error in the bus network adapter power supply	– Check the bus network adapter supply voltage
	Channel LED 1.1-4.1	**Red:** – Input signal outside permissible range – Line break	– Check the input signal, the cabling and, if necessary, the sensor for external cold-junction compensation.

Module	LED	Status	Recommended action
		– Cold-junction compensation error (EP-3804 only) – System bus cannot be accessed (for example, caused by interruption of the bus network adapter power supply)	– Check the bus network adapter supply voltage
EP-1813	Status LED	**Red:** – Error in supply voltage at input current path – Communication error on the system bus – There is a new diagnostic message	– Check that the module has been snapped into place properly – Check the supply voltage
	Channel LED 2.2	**Yellow** – Voltage >70 V at L1	
	2.3	– Nominal input current (1 A / 5 A) or parameterised limit exceeded	– Check the feed-in current – Check the parameterised limit – Check whether the connections (1 A and 5 A) have been mixed up – Install a shunt
	2.4	**Red:** – Nominal input voltage (300 V) or parameterised limit exceeded	– Check the Voltage – Chek the parameterised limit
	Channel LED 3.2	**Yellow** Voltage >70 V at L2	
	3.3	**Red:** Nominal input current (1 A/5 A) or parameterised limit exceeded	– Check the feed-in current – Check the parameterised limit – Check whether the connections (1 A and 5 A) have been mixed up Install a shunt
	3.4	**Red:** Nominal input voltage (300 V) or parameterised limit exceeded	– Check the Voltage – Chek the parameterised limit
	Channel LED 4.2	**Yellow** Voltage >70 V at L3	
	4.3	**Red:** Nominal input current (1 A/5 A) or parameterised limit exceeded	– Check the feed-in current – Check the parameterised limit – Check whether the connections (1 A and 5 A) have been mixed up Install a shunt
	4.4	**Red:** Nominal input voltage (300 V) or parameterised limit exceeded	– Check the Voltage – Chek the parameterised limit –

Module	LED	Status	Recommended action
Analog output modules			
EP-4164 EP-4264	Status LED	**Red:** – Error in supply voltage – Communication error – Channel error	– Check that the module has been snapped into place properly – Check the supply voltage – Check the channel error
		Status LED off and all other LEDs red: Error in the bus network adapter power supply	– – Check the bus network adapter supply voltage
	Channel LED 1.1-4.1	**Red:** – Overload in voltage mode – Broken line in current mode – System bus cannot be accessed (for example, caused by interruption of the bus network adapter power supply)	– Check the connected load, check the cabling, – Check the bus network adapter supply voltage
Power modules			
EP-7631	Status LED	**Red:** – Channel error or communication error on the system bus, or there is an error in the supply voltage	– Check that the module has been snapped into place properly – Check the channel error, check the supply voltage
	3.2	**Red:** Supply voltage of the feed in plug < 18Vdc	– Check supply voltage of feed in plug
	3.4	**Red:** Damage of internal fuse	– Replace module
EP-7641	Status LED	**Red:** Channel error or communication error on the system bus, or there is an error in the supply voltage	– Check that the module has been snapped into place properly – Check the channel error, check the supply voltage
	3.2	**Red:** Supply voltage of the feed in plug < 18Vdc	– Check supply voltage of feed in plug
	3.4	**Red:** Damage of internal fuse	– Replace module
Potential distribution modules			
EP-711F EP-710F	Status LED	**Red:** Error in supply voltage of the input path	– Check that the module has been snapped into place properly – Check the supply voltage
EP-751F EP-750F	Status LED	**Red:** Error in supply voltage of the input path	– Check that the module has been snapped into place properly – Check the supply voltage
EP-700F	Status LED	**Off:** No supply voltage	– Check that the module has been snapped into place properly
Safety modules			
EP-1901	Status LED	**Red:** – Module has not been snapped properly	– Check that the module has been snapped into place properly

Module	LED	Status	Recommended action
		– Error in the supply voltage – Channel error	– Check the supply voltage – check +24 V input current path – Check voltage on plug 4.3; in case of cascading 0 V might be properly, therefore this is not an error – Check channel error
		– Overload at the OSSD output level	– Remove cross connection at OSSD
		– External feed-in recognized from field side	– Measure voltage at OSSD pin (4.3) vs. GND (4.4). – If a voltage is present, check the wiring. – Attention: safety hazard! Shut down the system and prevent it from switching on again.
		– Internal error detected	– Module might have switched off caused by overtemperature; check the temperature inside the switch cabinet – Perform a cold start within 24 hours – If the error has not been fixed, send the module to Emerson for a technical examination.
		– Interruption in one of the two safety loops of a safety circuit for at least 3 seconds.	– Check safety circuit for interruptions if an interruption of the safety channel is not part of the application.
		– Cross connection between the safety loops for at least 3 seconds.	– Check safety circuit for cross connections.
	1.1	**Off**: Safety circuit 1 interrupted **Yellow**: Safety circuit 1 OK	– Check safety circuit 1
	4.2	**Off**: OSSD not active **Yellow**: OSSD active, 24Vdc at output	–
	4.3	**Green**: Feed-in voltage in valid range	–
EP-1902 EP-1922	Status LED	– Red: – Module has not been snapped properly – Error in the supply voltage – Channel error	– Check that the module has been snapped into place properly – Check the supply voltage – check +24 V input current path – Check voltage on plug 4.3; in case of cascading 0 V might be properly, therefore this is not an error

Module	LED	Status	Recommended action
			– Check channel error
		– Overload at the OSSD output level	– – Remove cross connection at OSSD
		– External feed-in recognized from field side	– Measure voltage at OSSD pin (4.3) vs. GND (4.4). – If a voltage is present, check the wiring. – Attention: safety hazard! Shut down the system and prevent it from switching on again.
		– Internal error detected	– Module might have switched off caused by overtemperature; check the temperature inside the switch cabinet – Perform a cold start within 24 hours – If the error has not been fixed, send the module to Emersonfor a technical examination.
		– Interruption in one of the two safety loops of a safety circuit for at least 3 seconds.	– Check safety circuit for interruptions if an interruption of the safety channel is not part of the application.
		– Cross connection between the safety loops for at least 3 seconds.	– Check safety circuit for cross connections.
	1.1	Off: Safety circuit 1 interrupted Yellow: Safety circuit 1 OK	– Check safety circuit 1
	1.2	Off: Safety circuit 2 interrupted Yellow: Safety circuit 2 OK	– Check safety circuit 2
	4.1 (DELAY only)	Off: SS1 not active Yellow: SS1 active, 24Vdc at output	
	4.2	Off: OSSD not active Yellow: OSSD active, 24Vdc at output	
	4.3	Green: Feed-in voltage in valid range	

Section 13: IO-Link Device Configuration

13.1 RSTi-EP IO-Link configurator

You can use the RSTi-EP IO-Link configurator to configure the IO-Link devices (sensors & actuators). You can carry out the following functions for test purposes, during commissioning or service work:

- Create & export IO-Link device configurations.
- Parameterize IO-Link devices through Network adapter using online mode.
- Read out identification data, process data and diagnoses of IO-Link devices.

IO-Link configurator tool is connected with RSTi-EP Network adapter via micro USB connection as shown below-

Figure 343: IO-Link Configurator tool connection with Network adapter

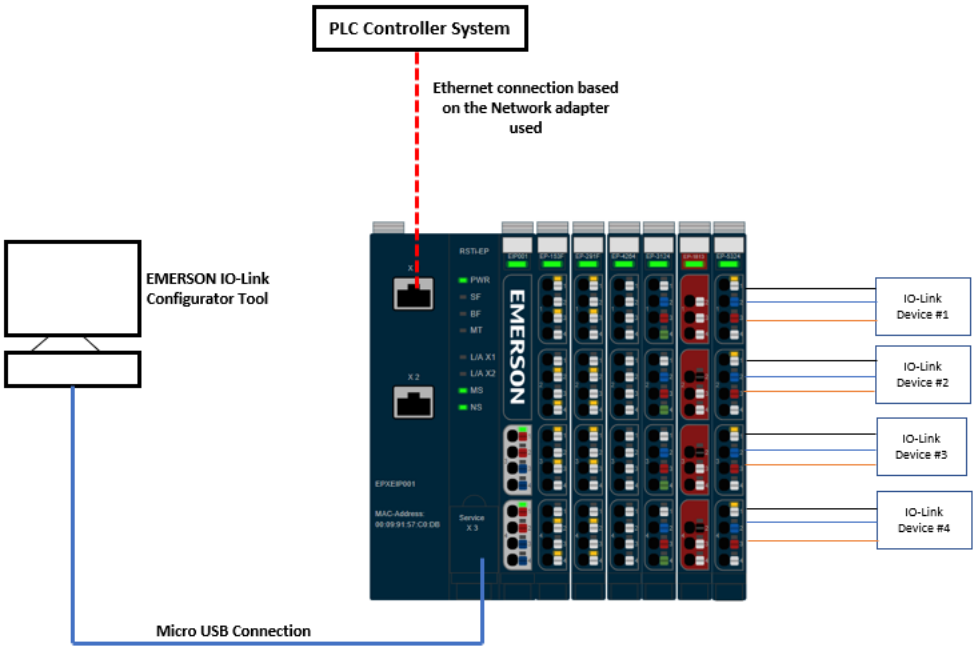

Note: To use the online parameterization feature of the IO-Link Configurator Tool, the 'HTTP Settings' parameter in the Network adapter webserver should be configured to "HTTP & HTTPS Concurrent operation" or "HTTP only". After configuration and parametrizing the IO-Link device, you can disconnect the tool with Network adapter. You should change the 'HTTP settings' to "HTTPS only" once the configuration and parametrization is done. Refer to Secure Deployment Guide for detailed information.

13.2 Installing RSTi-EP IO-Link configurator

- Download the RSTi-EP IO-Link configurator from Emerson website.
- Navigate the download folder
- Double click **EMERSON-IOLink-Device-Configurator-Setup_x.x.x.exe**
- Follow the installation wizard.

Once successfully installed, you can start the IO-Link Configurator. The starting page is displayed.

Note: The license conditions are displayed when the program is started for the first time. Read and confirm the license conditions.

13.3 Operating the RSTi-EP IO-Link configurator

13.3.1 Displaying the starting page

The starting page is displayed below each time you start the Emerson RSTi-EP IO-Link Configurator.

Figure 344: Starting page

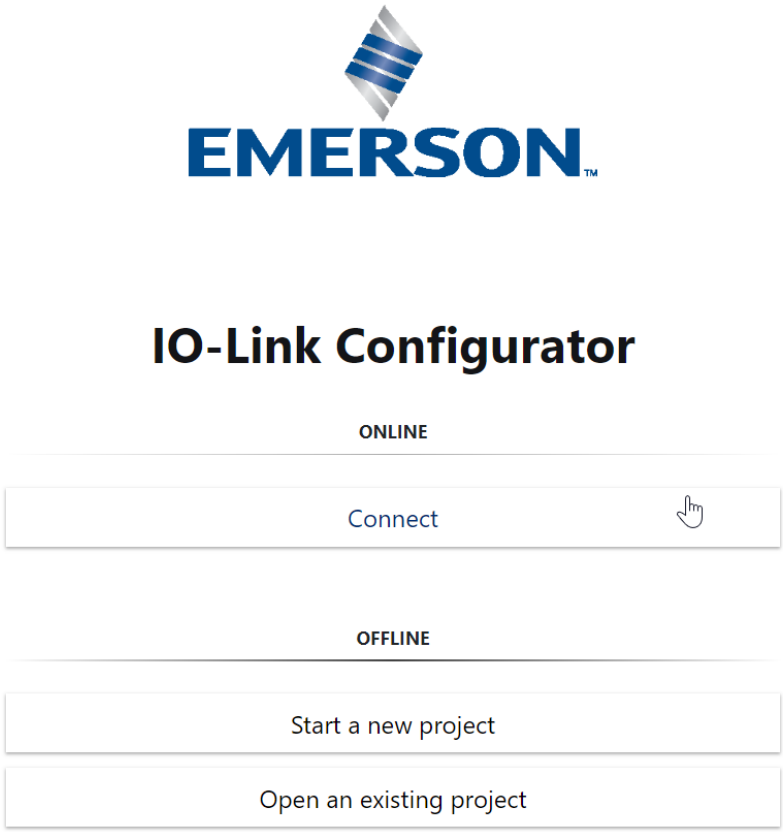

Note: The IO-Link Configurator tool does not support the Offline feature. In offline feature, you can generate the .Json file based on the configuration but you cannot import the configuration into the IO-Link communication Module-EP-5324.

On the starting page you can connect to the Network adapter using the USB Address, User Name & Password of the Network adapter, create a new project or open an existing project.

➢ In the **menu bar**, click the **house icon**.

Figure 345: Calling up the starting page

13.3.2 IO-Link port overview

Figure 346: IO-Link port overview (online mode)

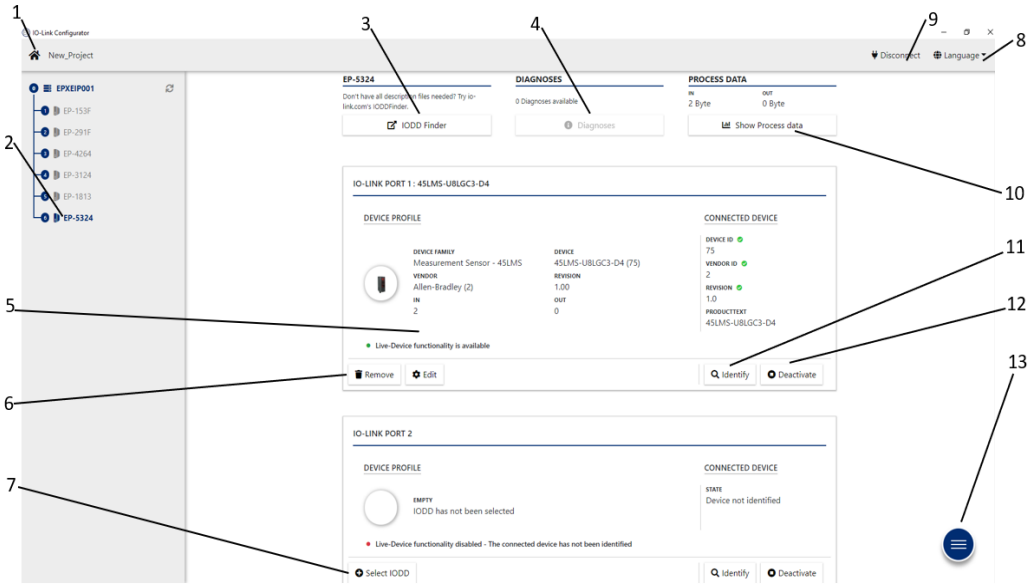

1. Displaying the starting page
2. Selecting IO-Link communication module in the device tree
3. Opening the IODD finder in the standard browser
4. Displaying diagnoses
5. Displaying IO-Link device parameters
6. Deleting IODD from IO-Link port
7. Adding IODD to IO-Link port
8. Changing the language
9. Separating the connection to the network adapter
10. Displaying the process data
11. Detecting the connected IO-Link device
12. Deactivating the IO-Link port
13. Displaying the context menu

13.3.3 IO-Link device detailed view

Figure 347: IO-Link device detailed view

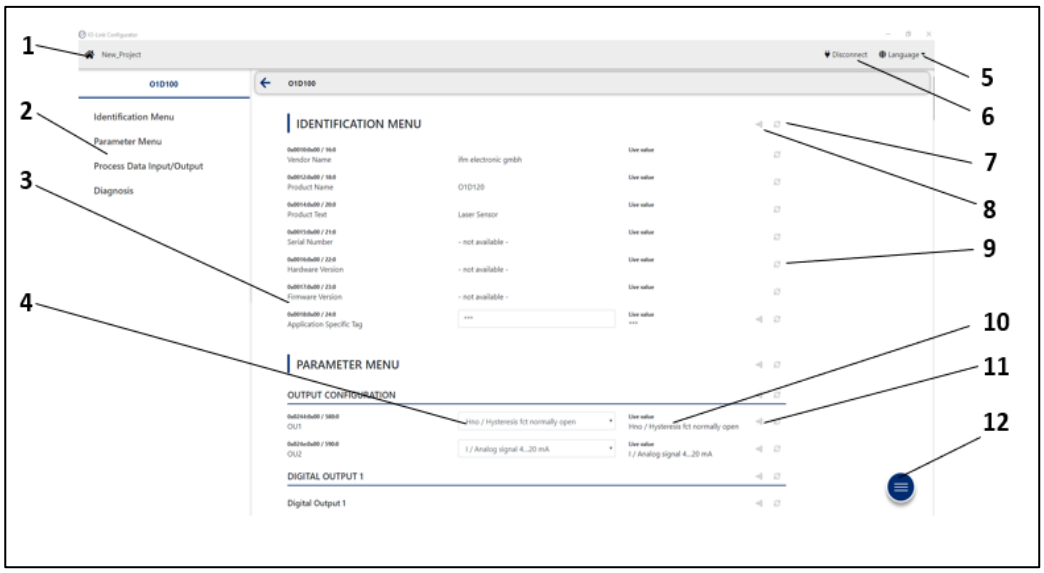

1. Displaying the starting page
2. Switching to section
3. Displaying details (mouse-over)
4. Editing the parameters
5. Changing the language
6. Connecting to the network adapter/separate the connection to the network adapter
7. Reading all the parameters in the section (only in online mode)
8. Writing all the changed parameters in the section (only in online mode)
9. Reading individual parameters (only in online mode)
10. Reading current parameter value (only in online mode)
11. Writing individual parameters (only in online mode)
12. Displaying the context menu

13.3.4 Displaying the context menu

What functions are displayed in the **context menu** depends on the current program context. The functions relate to the current displayed view in the program. Click ☰ to display the context menu.

Figure 348: Displaying the context menu

13.3.5 Creating a new project

A project incorporates the configuration of an IO-Link communication module.

- Navigate to the **IO-Link port overview**.
- Open the **context menu**.
- Click **Create new**.
- If you wish to discard the existing project, click **OK**.

A new project is created.

13.3.6 Saving a project

A project incorporates the configuration of an IO-Link communication module.

- Open the **context menu**.
- Click **Save as**.
- Select a storage location and a file name and click **Save**.

The project is saved with the file ending “.emr ”.

After you have saved a project for the first time, you can save the changes by clicking on **Save**.

13.3.7 Opening a project

- Navigate to the **IO-Link port overview**.
- Open the **context menu**.
- Click **Open**.
- Select the required project (.emr) and click **Open**.
- If you wish to discard the existing project, click **OK**.

The project is opened.

13.3.8 Changing the language

You can change the language of the user interface.

- In the **menu bar**, click **Language**.
- Select the required language.

The language is changed immediately.

Note: Some of the texts from the IODDs of the IO-Link device manufacturer, such as parameter names, may not have been transferred.

13.3.9 Opening the IODDfinder in the standard browser

Your computer must be connected to the Internet. To add an IO-Link device to a configuration, you will need the relevant IODD from the manufacturer. You can search for and download IODDs using the IODDfinder.

- Navigate to the **IO-Link port overview**.
- Click the link to the **IODDfinder**.
  The IODDfinder is opened in your standard browser.
- Search for the required IODDs and load the files onto your computer.

Figure 349: Link to the IODDfinder

13.4 Editing IO-Link device configurations

13.4.1 Assigning the IO-Link device to an IO-Link port

- Navigate to the **IO-Link port overview**.
- For the empty IO-Link port, click **Select IODD**, in order to add the IODD.
- Select the IODD of the IO-Link device (.zip, .xml).
- Click **Open**.

Some IODDs describe several device types. In this case, a dialogue window is displayed containing the available device types.

Figure 350: Adding an IODD

- Select the required device type from the list.
- Click **OK**.

13.4.2 Changing the device type

Some IODDs describe several device types. You can change the device type.

Figure 351: Changing the device type

- Navigate to the **IO-Link port overview**.
- For the IO-Link port for which you want to change the device type, **click Change type (double arrow icon).**

A dialogue window is displayed containing the available device types.

- Select the required device type from the list.
- Click **OK**.

13.4.3 Removing the IO-Link device assignment

Figure 352: Deleting the IO-Link device

- Navigate to the **IO-Link port overview**.
- For the IO-Link port for which you want to remove the assignment, click **Remove (bin icon).**

The assignment of the IO-Link device to this IO-Link port is removed.

13.4.4 Editing the IO-Link device parameters

Figure 353: Parameterizing the IO-Link device

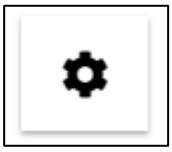

- Navigate to the **IO-Link port overview**.
- For the IO-Link device whose data you want to edit, click **Edit (cog icon).**
- The **detailed view** of the IO-Link device is opened.

Note: The parameters of an IO-Link device are defined by its manufacturer.

Observe the manufacturer ‘s documentation.

13.4.5 Determining the process data length

You can determine the process data length that is required for the IO-Link device configuration.

Figure 354: Determining the process data length

- Navigate to the **IO-Link port overview**.
- Read the process data length of the current configuration.
  - PD IN: Length of the input data in bytes
  - PD OUT: Length of the output data in bytes

13.4.6 Finding & rectifying parameter errors

Faulty parameterized IO-Link devices are indicated by a red frame around the IO-Link port concerned.

Figure 355: Faulty parameterized IO-Link device

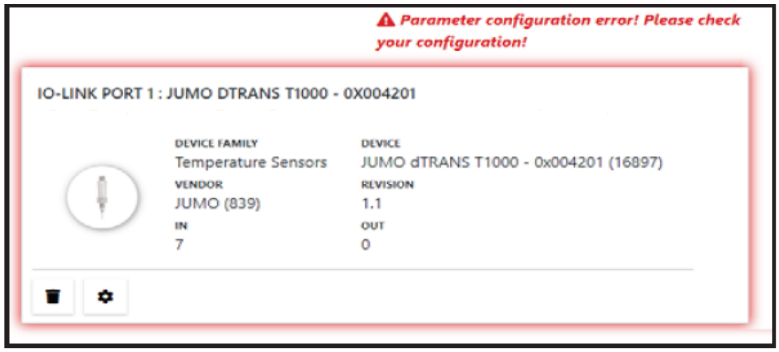

- Open the **detailed view** of the IO-Link device.

Figure 356: Jumping to faulty parameter value

- Click **Scroll to error** in order to jump to the next faulty parameter entry.

The faulty entry is indicated by a red frame. A note regarding error diagnosis is displayed.

Figure 357: Faulty parameter entry

- Correct the faulty entry.
- Repeat the procedure until all errors have been rectified.

13.5 Editing IO-Link device configurations online

⚠CAUTION

Manipulation of the control unit

During commissioning, the system may be manipulated to such an extent that this can result in risks to life and material damage.

- Make sure that system components cannot start up unintentionally!

13.5.1 Connecting to the Network adapter

The RSTi-EP system must be completely assembled and supplied with voltage. The computer must be connected to the RSTi-EP system via USB or Ethernet.

Note: If you access a network adapter via RSTi-EP IO-Link configurator and RSTi-EP web server simultaneously, this may result in access conflicts.

- Click **Connect** on the **starting page**. Alternatively, click **Connect** in the **menu bar**.
- Enter the IP address of the **network adapter**.
- Click **OK**.
- You may be requested to enter your user name and password.

You need the same user name and the same password that you use when logging in for the RSTi-EP web server of this network adapter.

- Enter the user name and password.

The online mode of the IO-Link Configurator is started. The network adapter with connected EP-5324 modules is displayed in the device tree.

- Click in the **device tree** on the IO-Link communication module whose configuration you want to edit.
- The IO-Link port overview of the IO-Link communication module is displayed.

13.5.2 Activating an IO-Link port

You must be connected to the network adapter.

Figure 358: Activating an IO-Link port

- In the **device tree**, switch to the required IO-Link communication module.
- For the IO-Link port that you want to activate, click **Activate (play icon).**

The "Operating mode" parameter of the IO-Link port concerned is set to the value "IO-Link". The supply voltage of the IO-Link port is switched on. The connected IO-Link device sends and receives process data.

13.5.3 Deactivating an IO-Link Port

You must be connected to the network adapter.

Figure 359: Deactivating an IO-Link Port

- In the **device tree**, switch to the required IO-Link communication module.
- For the IO-Link port that you want to deactivate, click **Deactivate (stop icon).**

The "Operating mode" parameter of the IO-Link port concerned is set to the value "Deactivated". The supply voltage of the IO-Link port is switched off.

13.5.4 Identifying a connected IO-Link device

The IO-Link port to which the IO-Link device is connected must be activated.

Figure 360: Identifying an IO-Link device

The configurator can determine the identification data of a connected IO-Link device. You can use the identification data to find the corresponding IODD or to check whether you have assigned the correct IO-Link device to the IO-Link port.

- In the **device tree**, switch to the required IO-Link communication module.
- For the IO-Link port to which the IO-Link device is connected, **click Identify (magnifying class icon)**.

The Configurator calls up the identification data of the IO-Link device and illustrates it in the IO-Link port overview.
If you have already assigned an IO-Link device to this IO-Link port, the Configurator compares the identification data of the IODD with the identification data of the connected IO-Link device. Matches are highlighted in green. Deviations are highlighted in red.

13.5.5 Downloading IODDs for a connected IO-Link device

The connected IO-Link device must be identified by the IO-Link Configurator. Your computer must be connected to the Internet.

Figure 361: Downloading IODDs

- In the **device tree**, switch to the required IO-Link communication module.
- For the empty IO-Link port, click **Download IODD** to which you want to add the IO-Link device.

The IODDfinder is opened in your standard browser.

- Search for the required IODDs and load the files onto your computer.

13.5.6 Reading out IO-Link device parameters

The IO-Link device must be assigned to the IO-Link port. The connected IO-Link device must be identified by the IO-Link Configurator. The IODD must match the connected IO-Link device. Depending on the number of parameters to be read and the capacity utilization of the adapter, it may take a while until all data is read.

- In the **device tree**, switch to the required IO-Link communication module.
- For the IO-Link device whose data you want to edit, click **Edit (cog icon).**

The **detailed view** of the IO-Link device is opened.

Figure 362: Updating the parameters

If you want to update an individual parameter:

- Click the **update icon** next to the entry.

If you want to update all parameters in a section:

- Click the **update icon** next to the section heading.

If you want to update all parameters of an IO-Link device:

- Open the **context menu**.
- Click **Read all parameters**.

13.5.7 Writing IO-Link device parameters

An IO-Link device must be assigned to the IO-Link port. The connected IO-Link device must be identified by the IO-Link Configurator. The IODD must match the connected IO-Link device. Depending on the number of parameters to be written and the capacity utilization of the adapter, it may take a while until all data is written.

- In the **device tree**, switch to the required IO-Link communication module.
- For the IO-Link device whose data you want to edit, click **Edit (cog icon)**.

The **detailed view** of the IO-Link device is opened.

Figure 363: writing parameters

If you want to write an individual parameter:

- Edit the parameter.
- Click the **apply icon** next to the entry.

If you want to update all edited parameters in a section:

- Edit the parameters in this section.
- Click the **apply icon** next to the section heading.

If you want to write all edited parameters of an IO-Link device:

- Edit the parameters of the IO-Link device.
- Open the **context menu** in the **detailed view** of this IO-Link device.
- Click **Apply configuration**.

If you want to write all edited parameters of all IO-Link device to one IO-Link communication module:

- Edit the parameters of the IO-Link devices.
- Navigate to the **IO-Link port overview** of the IO-Link communication module.
- Open the context menu in the IO-Link port overview of the IO-Link communication module.
- Click **Apply configuration**.

13.5.8 Displaying process data

You must be connected to the Network adapter.

- In the **device tree**, switch to the required IO-Link communication module.
- In the **IO-Link port overview**, click **Show process data**.

A dialogue box opens. In the **Mapping Information** section, the process data mapping for the individual IO-Link ports is displayed in process data tables.
In the **IN** section, the entire process input data telegram including current values is mapped in bytes. In the **OUT** section, the entire process output data telegram including current values is mapped in bytes. The values are illustrated in hexadecimal format.

- Click Ⅱ to pause the process data update.
- Click ▶ to continue the process data update.
- Click **Close** to close the dialogue box.

13.5.9 Displaying diagnosis

You must be connected to the network adapter.

- In the **device tree**, switch to the required IO-Link communication module.
- In the **IO-Link port overview**, click **Diagnoses**.

A dialogue box opens. The available diagnoses are displayed in a table.

- Click the **bin icon** to delete a diagnosis.
- Click the **bin icon** in the header to delete all diagnoses

Section 14: Accessories and Replacement Parts

14.1 Accessories

Order No.	Designation	Purpose
EP-8100	Swivel marker	Pivoting holder for module markers
EP-8101	Paper labels for swivel markers	Can be printed with laser printers
EP-8301	Termination kit	Set with two end brackets and one end plate
EP-8360	HD-Plug	Plug for HD-modules (8 pieces per package)
EP-8400	Plug Kit Generic	This part is a plug-in-unit which consist of a Connector Frame and Connectors. [standard Emerson blue color]. This can be used as replacement part or can be used to facilitate custom wire harness creation before arriving at the installation site. This is an orderable part# which comes as a pack of 30 units per box. This Plug Kit is a generic accessory for all RSTi-EP IO modules.
EP-8150	Swap-in-Module Marker	This marker can be used with plotters or permanent marker to help customers identify slice number, function, etc. Securely clips onto module at top and/or bottom.

14.2 Replacement Parts

Figure 364: Identification of Replacement Parts

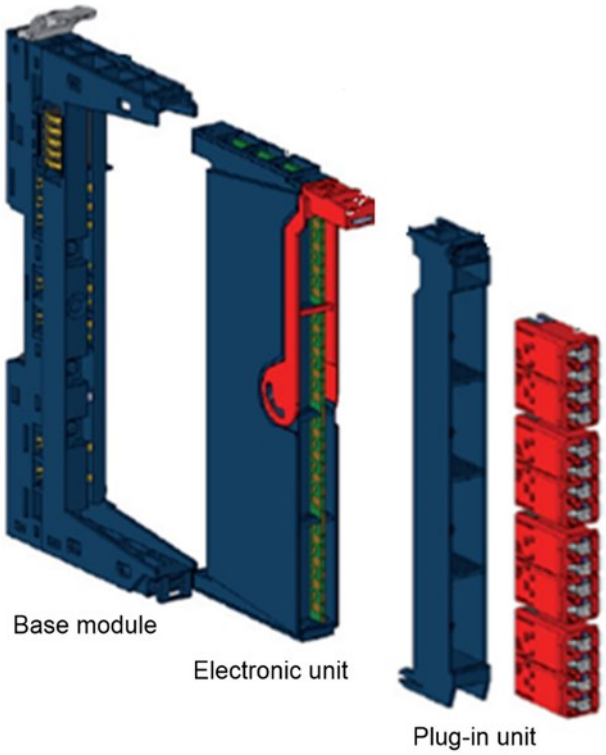

14.2.1 Replacement Parts for Network Adapters

Network Adapter/ Order No.
EPXPBS001
EPXPNS001
EPXPNS101
EPXMBE001
EPXMBE101
EPXETC001
EPXEIP001

14.2.2 Replacement Parts for Modules

Module/Order No.	Base Module
EP-1214	EP-8300
EP-1218	EP-8300
EP-1318	EP-8300
EP-125F	EP-8300
EP-12F4	EP-8300
EP-153F	EP-8300
EP-1804	EP-8300
EP-2214	EP-8300
EP-2614	EP-8300
EP-2634	EP-8300
EP-2218	EP-8300
EP-225F	EP-8300
EP-2814	EP-8300
EP-2714	EP-8300
EP-291F	EP-8300
EP-5111	EP-8300
EP-5112	EP-8300
EP-5212	EP-8300
EP-5261	EP-8300
EP-5311	EP-8300
EP-5422	EP-8300
EP-5422	EP-8300
EP-5324	EP-8300
EP-3164	EP-8300
EP-3264	EP-8300
EP-3664	EP-8300
EP-3124	EP-8300
EP-3368	EP-8300
EP-3468	EP-8300
EP-4164	EP-8300
EP-4264	EP-8300
EP-3704	EP-8300
EP-3804	EP-8300

EP-1813	EP-8300
EP-7631	EP-8631
EP-7641	EP-8641
EP-1901	EP-8300
EP-1902	EP-8300
EP-1922	EP-8300
EP-711F	EP-8300
EP-751F	EP-8300
EP-700F	EP-8300
EP-710F	EP-8300
EP-750F	EP-8300
EP-8310	EP-8300

Note: *For PACSystems™ EPSCPE100/CPE115 Standalone Controller details, refer GFK-2222 & Quick start guide Manual.*

Appendix A: Decimal & Hexadecimal Conversion Table

Decimal	Hexadecimal	Decimal	Hexadecimal	Decimal	Hexadecimal	Decimal	Hexadecimal
001	1	034	22	067	43	100	64
002	2	035	23	068	44	101	65
003	3	036	24	069	45	102	66
004	4	037	25	070	46	103	67
005	5	038	26	071	47	104	68
006	6	039	27	072	48	105	69
007	7	040	28	073	49	106	6A
008	8	041	29	074	4A	107	6B
009	9	042	2A	075	4B	108	6C
010	A	043	2B	076	4C	109	6D
001	B	044	2C	077	4D	110	6E
012	C	045	2D	078	4E	111	6F
013	D	046	2E	079	4F	112	70
014	E	047	2F	080	50	113	71
015	F	048	30	081	51	114	72
016	10	049	31	082	52	115	73
017	11	050	32	083	53	116	74
018	12	051	33	084	54	117	75
019	13	052	34	085	55	118	76
020	14	053	35	086	56	119	77
021	15	054	36	087	57	120	78
022	16	055	37	088	58	121	79
023	17	056	38	089	59	122	7A
024	18	057	39	090	5A	123	7B
025	19	058	3A	091	5B	124	7C
026	1A	059	3B	092	5C	125	7D
027	1B	060	3C	093	5D	126	7E
028	1C	061	3D	094	5E	127	7F
029	1D	062	3E	095	5F	128	80
030	1E	063	3F	096	60	129	81
031	1F	064	40	097	61	130	82
032	20	065	41	098	62	131	83
033	21	066	42	099	63	132	84

Decimal	Hexadecimal	Decimal	Hexadecimal	Decimal	Hexadecimal	Decimal	Hexadecimal
133	85	166	A6	199	C7	232	E8
134	86	167	A7	200	C8	233	E9
135	87	168	A8	201	C9	234	EA
136	88	169	A9	202	CA	235	EB
137	89	170	AA	203	CB	236	EC
138	8A	171	AB	204	CC	237	ED
139	8B	172	AC	205	CD	238	EE
140	8C	173	AD	206	CE	239	EF
141	8D	174	AE	207	CF	240	F0
142	8E	175	AF	208	D0	241	F1
143	8F	176	B0	209	D1	242	F2
144	90	177	B1	210	D2	243	F3
145	91	178	B2	211	D3	244	F4
146	92	179	B3	212	D4	245	F5
147	93	180	B4	213	D5	246	F6
148	94	181	B5	214	D6	247	F7
149	95	182	B6	215	D7	248	F8
150	96	183	B7	216	D8	249	F9
151	97	184	B8	217	D9	250	FA
152	98	185	B9	218	DA	251	FB
153	99	186	BA	219	DB	252	FC
154	9A	187	BB	220	DC	253	FD
155	9B	188	BC	221	DD	254	FE
156	9C	189	BD	222	DE	255	FF
157	9D	190	BE	223	DF	256	100
158	9E	191	BF	224	E0	257	101
159	9F	192	C0	225	E1	258	102
160	A0	193	C1	226	E2	259	103
161	A1	194	C2	227	E3	260	104
162	A2	195	C3	228	E4	261	105
163	A3	196	C4	229	E5	262	106
164	A4	197	C5	230	E6	263	107
165	A5	198	C6	231	E7	264	108

Appendix B: Marine Certification Table

These product revisions are updated to be usable in Marine application and have Marine certification from specified agencies.

B.1 Network Adaptors

Catalog	Description	DNV-GL	LR
EPXPNS001-ABAD	PROFINET IRT NETWORK ADAPTER, 2 CU PORTS	√	√
EPXPNS101-AAAA	PROFINET IRT NETWORK ADAPTER, 2 CU PORTS -System Redundancy support	√	√
EPXETC001-ABAD	EtherCAT Network Adapter, 2 CU PORTS	√	√
EPXMBE101-ABAD	MODBUS TCP NETWORK ADAPTER, 2 CU PORTS [DUAL LAN]	√	√

B.2 Digital Input Modules

Catalog	Description	DNV-GL	LR
EP-1218-C	IN 8 PTS, POS LOGIC, 24 Vdc, 2-Wire	√	√
EP-125F-C	IN 16 PTS, POS LOGIC, 24 Vdc, 1-Wire	√	√
EP-1318-C	IN 8 PTS, POS LOGIC, 24 Vdc, 3-Wire	√	√
EP-1214-C	IN 4 PTS, POS LOGIC, 24 Vdc	√	√
EP-12F4-B	IN 4 PTS, POS LOGIC, 24 Vdc, Time Stamp	√	√
EP-1804-B	IN 4 PTS, 110-230Vac, Isolated	√	√

B.3 Digital Output Modules

Catalog	Description	DNV-GL	LR
EP-2214-C	OUT 4 PTS, POS LOGIC, 0.5A, 24 Vdc	√	√
EP-2614-C	OUT 4 PTS, POS LOGIC, 2A,24 Vdc	√	√
EP-2634-B	OUT, 4 PTS, POS/NEG LOGIC, 2 A, 24 Vdc	√	√
EP-2814-B	OUT, 4 PTS, POS LOGIC, 1A, 230Vac	√	√
EP-2218-C	OUT, 8 PTS, POS LOGIC, 0.5 A, 24 Vdc	√	√
EP-225F-C	OUT, 16 PTS, POS LOGIC, 0.5 A, 24 Vdc	√	√
EP-2714-B	RLY OUT, 4 PTS, 6A, 24 - 220 Vdc/Vac	√	√

B.4 Analog Input Modules

Catalog	Description	DNV-GL	LR
EP-3124-BC	ANALOG IN, 4 CH, VOLT/CURR, 12 BITS	√	√
EP-3164-BC	ANALOG IN, 4 CH, VOLT/CURR, 16 BITS	√	√
EP-3264-BC	ANALOG IN, 4 CH, VOLT/CURR, 16 BITS, DIAG	√	√
EP-3664-AA	ANALOG IN, 4 CH, VOLT/CURR, 16 BITS, DIAG, Differential	√	√

EP-3704-CC	ANALOG IN, 4 CH, RTD 16 BITS, DIAG	√	√
EP-3804-CC	ANALOG IN, 4 CH, TC 16 BITS, DIAG	√	√

B.5 Analog Output Modules

Catalog	Description	DNV-GL	LR
EP-4164-CB	ANALOG IN, 4 CH, VOLT/CURR, 12 BITS	√	√
EP-4264-CB	ANALOG IN, 4 CH, VOLT/CURR, 16 BITS	√	√

B.6 Digital Counter & Interface Modules

Catalog	Description	DNV-GL	LR
EP-5111-B	HSC 1 CH, AB 100 KHZ, DO, 0.5 A, 24 Vdc	√	√
EP-5112-B	HSC 2 CH, AB 100 KHZ	√	√
EP-5212-B	FREQ MEASUREMENT, 2 CH, 100 KHZ	√	√
EP-5311-B	SSI Comm 1 CH	√	√

B.7 Potential Distribution Modules for I/O & Functional Earth

Catalog	Description	DNV-GL	LR
EP-700F-B	POWER MOD, 16 CH, FUNC EARTH	√	√
EP-710F-B	POWER MOD, 16 CH, GND 24 Vdc, IN PATH	√	√
EP-711F-B	POWER MOD, 16 CH, 24 Vdc DIST, IN PATH	√	√
EP-750F-B	POWER MOD, 16 CH, GND 24 Vdc, OUT PATH	√	√
EP-751F-B	POWER MOD, 16 CH, 24 Vdc DIST, OUT PATH	√	√
EP-7631-B	POWER MOD, 1 CH, 10A, 24 Vdc, IN PATH	√	√
EP-7641-B	POWER MOD, 1 CH, 10A, 24 Vdc, OUT PATH	√	√
EP-8310-B	EMPTY SLOT FILLER	√	√

Appendix C: Serial Number Tracking Table

The table below provides a mechanism to derive date code and other information through the serial number marked on the product.

Position	1	2		3		4		5	6	7	8	9	10	11	12	13	14	15
Year	Code		Month	Code	Tag	Code	Manufacturer	Code		Product family code				Serial numbers				
2013	A	N	January	1	1	1		0	1	P	C	7	3	0	0	1	0	1
2014	**A**	**O**	February	2	2	2		0	2									
2015	A	P	March	3	3	3		0	3									
2016	A	Q	April	4	4	4		0	4									
2017	A	R	May	5	5	5		0	5									
2018	A	S	June	6	6	6		0	6									
2019	A	T	**July**	**7**	7	7		0	7									
2020	A	U	August	8	8	8		0	8									
2021	A	V	September	9	9	9		0	9									
2022	A	W	October	O	10	A		1	0									
2023	A	X	November	N	11	B		1	1									
2024	A	Y	December	D	12	C		1	2									
2025	A	Z			13	D		1	3									
2026	B	A			14	E		1	4									
2027	B	B			15	F		1	5									
2028	B	C			16	G		1	6									
2029	B	D			**17**	**H**		1	7									
2030	B	E			18	I		1	8									
2031	B	F			19	J		1	9									
2032	B	G			20	K		**2**	0									
2033	B	H			21	L		2	1									
2034	B	I			22	M		2	2									
2035	B	J			23	N		2	3									
2036	B	K			24	O		2	4									
2037	B	L			25	P		2	5									
2038	B	M			26	Q		2	6									
2039	B	N			27	R		2	7									
2040	B	O			28	S		2	8									
2041	B	P			29	T		2	9									
2042	B	Q			30	U		3	0									
2043	B	R			31	V		3	1									
2044	B	S																
...																		
2052	C	A																
2053	C	B																
...																		

Example: AO7H21PC7300202

Date: 17 July 2014

Product Family: RSTi-EP

Appendix D: Product Certifications and Installation Guidelines for Conformance

This appendix describes the compliance markings that appear on PACSystems RSTi-EP products and the corresponding standards to which the products have been certified. This appendix also provides installation requirements for conformance to standards and additional safety guidelines for installing in the European Union.

RSTi-EP Agency Approvals

Description	Agency Standard or Marking	Comments
N.A. Safety for Industrial Control Equipment	c UL us LISTED	Certification by Underwriter's Laboratories to UL508 standard and equivalent CSA C22.2 No 142 - M1987standard
N.A. Safety for Hazardous Areas Class I, Div. 2, Groups A, B, C, D	c UL us LISTED	Certification by Underwriter's Laboratories to ISA 12.12.01 standard and equivalent CSA C22.2 No 213-M1987 standard
Low Voltage Directive European Safety for Industrial Control Equipment	CE	Self-Declaration in accordance with European Directives; Refer to Declaration of Conformity found at the Emerson support link located at the end of this document for a complete list of approved products
Electromagnetic Compatibility Directive European EMC for Industrial Control Equipment	CE	Certification by Competent Body in accordance with European Directives; Refer to Declaration of Conformity found at the Emerson support link located at the end of this document for a complete list of approved products
Explosive Atmospheres Directive European Safety for Hazardous Areas Equipment Group II, Category 3, Gas Groups A, B, C	Ex	Certification in accordance with European Directives and Independent 3rd Party Assessment Certificate; Refer to Declaration of Conformity found at the Emerson support link located at the end of this document for complete list of approved products

Note: The agency approvals listed above and on the Declaration of Conformities are believed to be accurate; however, agency approvals for a product should be verified by the marking on the unit itself.

D.1 UL Class 1 Division 2 Hazardous Areas Requirements

The following statements are required to display for Class I Division 2 Hazardous Locations:

1. EQUIPMENT LABELED WITH REFERENCE TO CLASS I, GROUPS A, B, C, and D, DIV. 2 HAZARDOUS LOCATIONS IS SUITABLE FOR USE IN CLASS I, DIVISION 2, GROUPS A, B, C, D OR NON–HAZARDOUS LOCATIONS ONLY.
2. WARNING – EXPLOSION HAZARD – SUBSTITUTION OF COMPONENTS MAY IMPAIR SUITABILITY FOR CLASS I, DIVISION 2.
3. WARNING – EXPLOSION HAZARD – DO NOT DISCONNECT EQUIPMENT UNLESS POWER HAS BEEN SWITCHED OFF OR THE AREA IS KNOWN TO BE NON–HAZARDOUS.
4. EQUIPMENT SHALL BE INSTALLED INTO AN ENCLOSURE THAT IS ONLY ACCESSIBLE WITH THE USE OF A TOOL

D.2 ATEX Zone 2 Hazardous Areas Requirements

To maintain compliance with the ATEX Directive, an RSTi-EP system located in a Zone 2 area (Category 3) must be installed within a protective enclosure meeting the following criteria:

- IP54 or greater
- Mechanical strength to withstand an impact energy of 3.5 Joules
- Only accessible with the use of a tool

General Contact Information

Home link: http://www.emerson.com/industrial-automation-controls

Knowledge Base: https://www.emerson.com/industrial-automation-controls/support

Technical Support

Americas
Phone: 1-888-565-4155
1-434-214-8532 (If toll-free option is unavailable)

Customer Care (Quotes/Orders/Returns): customercare.mas@emerson.com
Technical Support: support.mas@emerson.com

Europe
Phone: +800-4444-8001
+420-225-379-328 (If tollfree option is unavailable)
+39-0362-228-5555 (from Italy - if toll-free 800 option is unavailable or dialing from a mobile telephone)
Customer Care (Quotes/Orders/Returns): customercare.emea.mas@emerson.com
Technical Support: support.mas.emea@emerson.com

Asia
Phone: +86-400-842-8599
+65-6955-9413 (All other Countries)

Customer Care (Quotes/Orders/Returns): customercare.cn.mas@emerson.com
Technical Support: support.mas.apac@emerson.com

Any escalation request should be sent to: mas.sfdcescalation@emerson.com

Note: If the product is purchased through an Authorized Channel Partner, please contact the seller directly for any support.

Emerson reserves the right to modify or improve the designs or specifications of the products mentioned in this manual at any time without notice. Emerson does not assume responsibility for the selection, use or maintenance of any product. Responsibility for proper selection, use and maintenance of any Emerson product remains solely with the purchaser.

© 2021 Emerson. All rights reserved.
Emerson Terms and Conditions of Sale are available upon request. The Emerson logo is a trademark and service mark of Emerson Electric Co. All other marks are the property of their respective owners.

EMERSON