Operating Instructions

for

Oval Gear Flow Meter

Model: DON-...Lx/Hx/Rx/Dx/Gx/Bx/Zx/M4

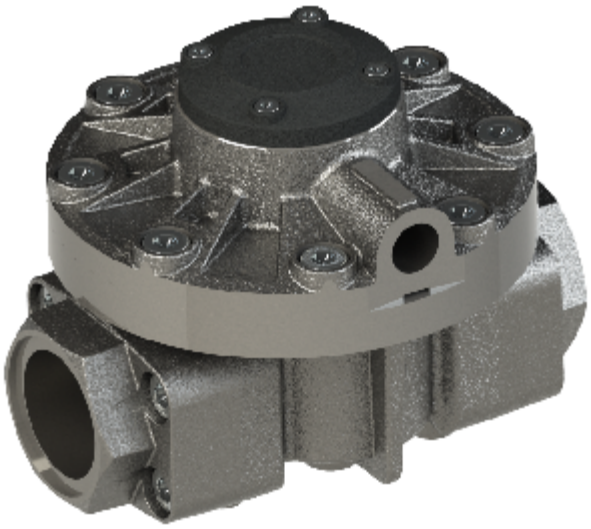

1. Contents

Manufactured and sold by:

KOBOLD Messring GmbH
Nordring 22-24
D-65719 Hofheim
Tel.: +49(0)6192-2990
Fax: +49(0)6192-23398
E-Mail: info.de@kobold.com
Internet: www.kobold.com

2. Note

Please read these operating instructions before unpacking and putting the unit into operation. Follow the instructions precisely as described herein.
The devices are only to be used, maintained, and serviced by persons familiar with these operating instructions and in accordance with local regulations applying to Health & Safety and prevention of accidents.

When used in machines, the measuring unit should be used only when the machines fulfil the EC-machine guidelines.

as per PED 97/23/EG

DON 1 Aluminum-Version

Model DON	DN	P_{max} [bar]	diagram 8 group 1 dangerous liquids	diagram 9 group 2 no dangerous liquids
DON-105	⅛	64	§3 art.3	§3 art.3
DON-110	¼	64		
DON-115	⅜	64		
DON-120	½	64		
DON-125	25	64		
DON-130	40	40		
DON-135	50	40		
DON-140	50	16		
DON-145	80	16		
DON-150	80	16		
DON-155	100	16		
DON-160	100	16		

DON 2/8 Stainless steel version

Model DON 2/8	DN	P_{max} [bar]	diagram 8 group 1 dangerous liquids	diagram 9 group 2 no dangerous liquids
DON-05	⅛	100	§3 Abs.3	§3 art.3
DON-10	¼	100	§3 Abs.3	
DON-15	⅜	100	§3 Abs.3	
DON-20	½	100	§3 Abs.3	
DON-25	25	100	category II	
DON-30	40	50	category II	
DON-35	50	50	category II	
DON-40	50	16	category II	
DON-45	80	16	category II	
DON-50	80	16	category II	
DON-55	100	16	category II	
DON-60	100	16	category II	

DON-1 M4 Aluminum version with mechanical totalizer

Option M4 Model DON-1	DN	P_{max} [bar]	diagram 8 group 1 dangerous liquids	diagram 9 group 2 no dangerous liquids
DON-05	⅛	-	-	-
DON-10	¼	-	-	-
DON-15	⅜	-	-	-
DON-20	½	40	§3 art.3	§3 art.3
DON-25	1	40	§3 art.3	
DON-30	1½	40	category II	
DON-35	2	40	category II	
DON-40	2	16	category II	
DON-45	3	16	category II	
DON-50	3	16	category II	
DON-55	4	16	category II	
DON-60	4	16	category II	

DON 2/8 Stainless steel with mechanical totalizer

Option M4 Model DON 2/8	DN	P_{max} [bar]	diagram 8 group 1 dangerous liquids	diagram 9 group 2 no dangerous liquids
DON-05	⅛	-	-	-
DON-10	¼	-	-	-
DON-15	⅜	-	-	-
DON-20	½	40	§3 art.3	§3 art.3
DON-25	1	40	§3 art.3	
DON-30	1½	40	category II	
DON-35	2	30	category II	
DON-40	2	16	category II	
DON-45	3	16	category II	
DON-50	3	16	category II	
DON-55	4	16	category II	
DON-60	4	16	category II	

3. Instrument Inspection

Instruments are inspected before shipping and sent out in perfect condition.
Should damage to a device be visible, we recommend a thorough inspection of the delivery packaging. In case of damage, please inform your parcel service / forwarding agent immediately, since they are responsible for damages during transit.

Scope of delivery:
The standard delivery includes:

- Oval Gear Flow Meter model: DON
- Operating Instructions
- Calibration Certificate

4. Regulation Use

The oval gear meter is a precise positive displacement flowmeter incorporating a pair of oval geared rotors. These meters are capable of measuring the flow of a broad range of clean liquids.

Stainless Steel flowmeters are suited to most water based products and chemicals and aluminum meters are suitable for fuels, fuel oils, & lubricating liquids. It is important to ensure that the medium to be measured is compatible with the materials used in the instrument. (See section 10 "Technical Data") It is also imperative to comply with the maximum permissible operating parameters specified in the "Technical Data" section.

The flowmeter is available as a measurement transducer with pulse output or with other forms of evaluation electronics. Details of how to operate the electronics are included in a separate instruction manual.

These flowmeters DON can be installed within hazardous areas when ordered with optional Exd approval, or by using the reed switch pulse output in Intrinsically Safe loops or installing Intrinsically Safe certified Instruments.

Any use of the oval gear flow meter model: DON, which exceeds the manufacturer’s specification, may invalidate its warranty. Therefore, any resulting damage is not the responsibility of the manufacturer. The user assumes all risk for such usage.

5. Operating Principle

Oval gear flowmeters are categorized as positive displacement flow technology. When liquid flows through this type of positive displacement flowmeter, two oval geared rotors measure a constant volume per rotation within a precisely machined measuring chamber. With each rotation, a constant volume of liquid is measured. The rotation of the oval gears is sensed via magnets embedded within the rotors. These magnets transmit a high resolution pulse output. The output signal can be process externally via a remote display controller or PLC or via a variety of output/display options available as accessories attached to the flowmeters.

The positive displacement flow technology allows for precise flow measurement of most clean liquids regardless of the media conductivity. Other liquid properties also have a minimal effect on the performance of this type of meter. Flow profile conditioning is not required as with alternative flow technology options making oval gear installations simple to install in tight spaces and at an economical price.

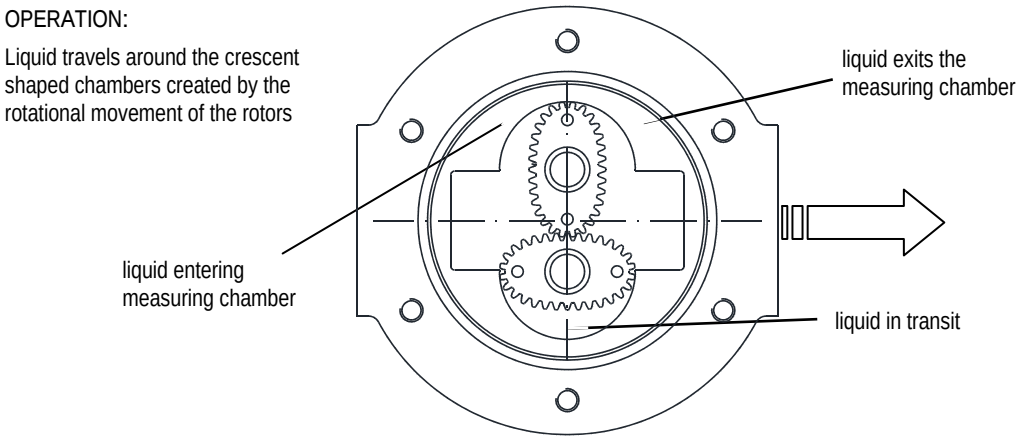

6. Mechanical Connection

6.1 General

Points to verify before meter installation:

- Chemical compatibility of the liquid. Be sure that all wetted parts are identified and confirmed suitable for use with the media being measured. If unsure, please contact a KOBOLD engineer for guidance in obtaining the proper reference materials.
- Verify that the operational pressure and temperature limits are within capability of the fully specified meter. Verify that the operational flow rates are within the specified flow range. Viscous liquids may limit the maximum allowable flow based on the viscosity. The max allowable flow rate may need to be limited to ensure the differential pressure across the flowmeter does not exceed 1 Barg, (100 kPa, 15 PSIG).
- Be sure that the flowmeter is not subject to any process temperatures and/or pressures that can cause the measured liquid to freeze or flash inside the meter.

6.2 Orientation

When installing the flowmeter, orientation must be considered. The rotor shafts must be in a horizontal plane. To verify that the rotor shafts are in a horizontal plane, electronic cover or optional digital display will be facing in a horizontal direction. For modification in the field, the electronic cover or digital display can be rotated in any 90 degree position. This accommodates access to the electrical entry and allows the electronic display orientation to best suit the installation.

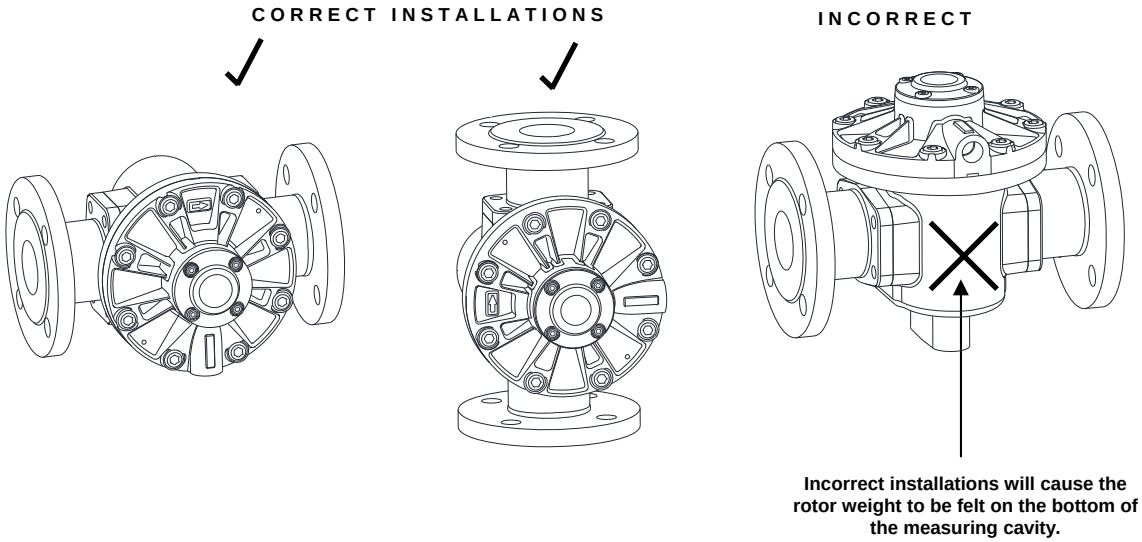

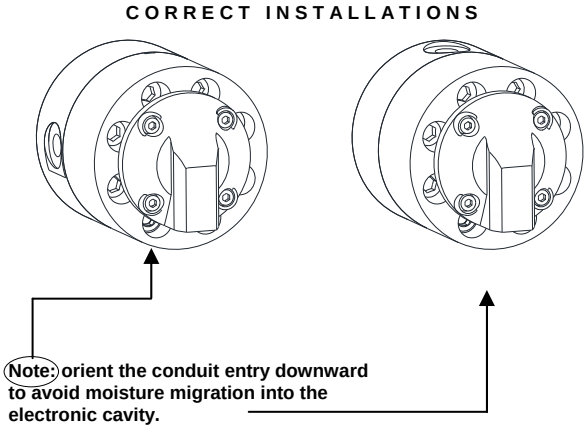

The DON flowmeter accommodates both horizontal and vertical flows. It is recommended that for vertical flow installations that the liquid flow up through the meter *(i.e. bottom to top*). This orientation assists in air or entrained gas removal. Since the flowmeter operates in both flow directions there are no markings showing inlet, outlet, or flow direction.

6.3 Flow Conditioning and Location

It is highly recommended to INSTALL a filter immediately before (prior to) the meter. Filters are available and sold separately.

Recommended Filter:
DON-x05…DON-x15: < 75 µm particle size (200 mesh)
DON-x20…DON-x35: < 150 µm particle size (100 mesh)
DON-x40…DON-x60: < 350 µm particle size (45 mesh)

Flow conditioning: Flow conditions is not required since the DON flowmeter does not require any straight pipe runs before or after the flowmeter.

Location: The recommended installation would be before of any flow control and/or shut off valves, this installation prevents complete emptying of the meter. This minimizes the risk of leakage and/or air entrapment which could result in damage to the flowmeter or inaccurate initial readings.

A by-pass installation is recommended for process or safety critical meters. Isolation valves enable the meter to be isolated from the system and serviced as needed. System purging is also possible with a by-pass arrangement. Accommodate all meter ratings and locate the meter on the discharge side of the process pump.

For outdoor applications, be sure all electrical entries are sealed properly via the proper glands, mounting, sealing or containment. For humid environments, mount the instrument appropriately as to avoid condensation build up. Generally these installations have the conduit connection pointing downward as to drain any condensate away from the electronics.

Liquid State: Liquid within the flowmeter must not freeze. If heat tracing is necessary, please be sure to adhere to the temperature limits of the flow meter. Ensure the liquid does not flash, do not exceed the max DP of the flowmeter.

Hydraulic shock: Surge dampeners or pressure relief valves must be installed if hydraulic shock or pressure spikes are present. Highly pulsating flow can also damage the DON flowmeter. Diaphragm pumps and specific application profiles can cause high frequency pulsating flow. Proper pulsating dampers are highly recommend.

7. Electrical Connection

7.1 Connecting Cable

Proper shielded instrument cable is highly recommended. Low capacitance twisted pair 7 x 0.3 mm (0.5 mm²) for use with the DON and any remote receiving instrumentation. Typical cable would be Belden® 9363 or similar. Connect the cable shield to DC common or designated grounding terminal at the receiving instrument. Remember to only connect the end of the cable shielding at the receiving instrument (not the DON) to ensure proper interference protection.

Please be sure not to run the connecting cable within a common conduit or in close proximity to conduit with high inductive loads or power sources. This could result in noise or inducted errors to the output signal or result in damage to the electronic components. Always run the instrument cables in a separate conduit or within a common conduit with other low power cables. Max cable length should be limited to 3280 ft (1000 m).

7.2 Hazardous area wiring

The instrument can only be operated in the ATEX area as "Simple Apparatus" in accordance with ATEX Article 1 §2 and 3 with the "Reed contact" (R0) option and without ATEX labelling. For this purpose, intrinsically safe cabling must be laid between the instrument, the hazardous area and an approved isolation switching unit outside the hazardous area. (See section 14.)

Alternatively, the device can be operated using option E1 (dual counter) or E3 (flow controller) with Ex ia IIB T4 approval [see separate operating instructions] or with explosion-protected housing (Exd) option RE, BE, GE, LE, HE or DE. Only Exd-certified cable conduits and cable glands with corresponding temperature limits may be used. Hall-effect sensor output is not possible if the DON flowmeter is operated in an ATEX zone as simple apparatus or using the E1/E3 option.
When operating the electronic options LE, BE, GE, RE, HE and DE, suitable operating materials must be used to ensure that the maximum operating voltage of 28 V_{DC} and the maximum operating current of 200 mA_{DC} are not exceeded.

The wiring methods used must be in accordance with the applicable rules, provisions and requirements at the location where the device is installed. The measuring devices may only be connected by qualified personnel who are familiar with the protection classes, provisions and specifications for the device in areas at risk of explosion.

7.3 Electrical connection for integrated electronics options

The electrical connection of the integrated electronics options always requires the electronics cover to be dismantled. Models from size X05 to X20 incorporate the cable inlet into the electronics cover, while models from the X25 size onwards accommodate the cable inlet in the housing cover.
The use of an EXD-certified cable gland is imperative for explosion-protection options HE, GE and LE (M20x1.5 or ½" NPT) (not included in delivery). The connecting cable must be routed through the cable duct and connected in accordance with 7.3.1 to 7.3.4. The connecting terminals are of the plug-in type, and can be taken out of the terminal compartment to facilitate connection.

7.3.1 Hall-effect sensor with active pulse output + reed contact (H0/HE/B0/BE/ options)

The H0/HE/B0/BE electronics options combine a hall-effect sensor with an active push-pull output stage. The B0/BE options involve combining bipolar Hall sensors with alternating polarised magnets. This option is particularly suitable for pulsating currents, although the pulse rate is halved compared to the H0/HE option. A three-phase electrical connection is used. The output is actively switched, either to the input terminal voltage +Vs or to GND. The external input terminal voltage is 8 to 30 Vdc. No additional external wiring is required (e.g. pull-up resistor). The high signal corresponds approximately to the +Vs input terminal voltage and the low signal approximately to 0 V.
The electrical load can be connected to either the input terminal voltage or GND

Max. output current (power source or sink): 100 mA (short-circuit protected).

The hall-effect sensor pulse output is not available if a device is ordered for use in the explosion hazard area as "Simple Apparatus" (e.g. if the "E1" option is ordered).

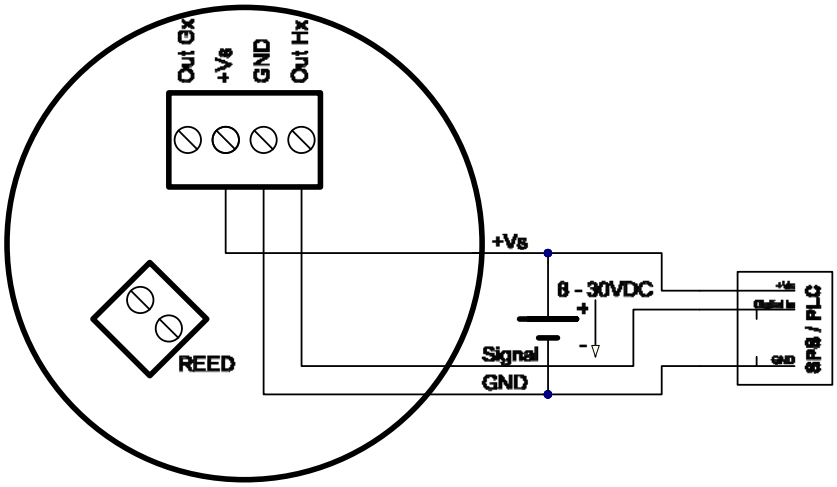

7.3.2 Reed Switch Pulse Output

The DON reed switch output is a SPST potential free N/O 2-wire output. This is a passive output so no power is required. The output may also be used with an appropriate intrinsically safe barrier for use in hazardous locations. If the intention is to operate the dry-reed contact impulse output in ATEX areas as simple apparatus, only the R0 option may be used. Note: when using the reed switch output the liquid temperature must not change at a rate greater than 10 ºC per minute (50 ºF per minute).
Average electrical endurance of switching contact (MTTF - Mean Time To First Failure):
Max. switching voltage (100 V/10 mA) $5x10^5$ switching cycles
Max. current load (20 V/500 mA) $5x10^6$ switching cycles
Min. load (<5 V/10 mA) $5x10^8$ switching cycles

Switching capacity: Max. 30 V_{DC}, max. 200 mA_{DC}

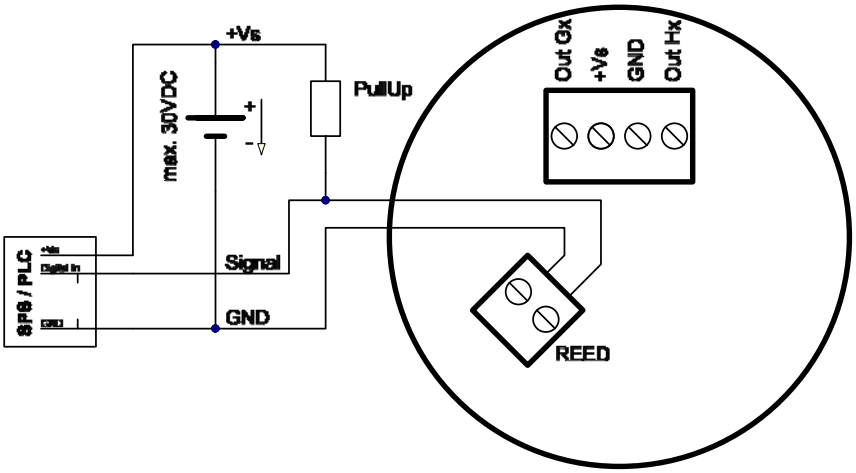

The individually specified maximum electrical values of the reed switch must never be exceeded, even for a moment. Higher switching values may reduce the service life or even destroy the contact.
For capacitive and inductive loads (e.g. via long lines), we recommend the following protective circuits:

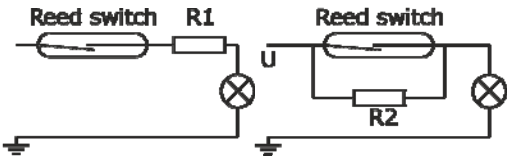

Lamp load with series or parallel resistance to the reed switch.

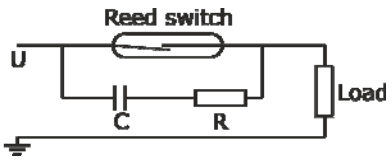

Protection with a RC suppressor for a.c. current and inductive load.

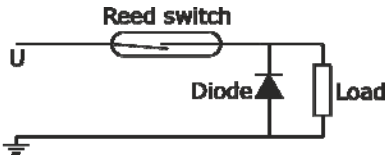

Protection with a diode for d.c. current and inductive load.

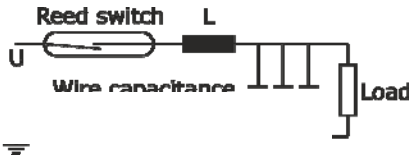

Protection with an inductance or resistance for capacitive load.

7.3.3 Quadrature Pulse Output (QUAD, Option D0/DE)

For the D0/DE option, the DON devices come with 2 independent hall-sensor elements. The hall-effect sensors are arranged so that they emit separate phase-shifted signals to one another.
The QUAD output is best-suited for verified use with a redundant signal or for counting bidirectional currents (detecting the current direction).

Max. output current per channel (power source or sink): 100 mA (short-circuit protected).

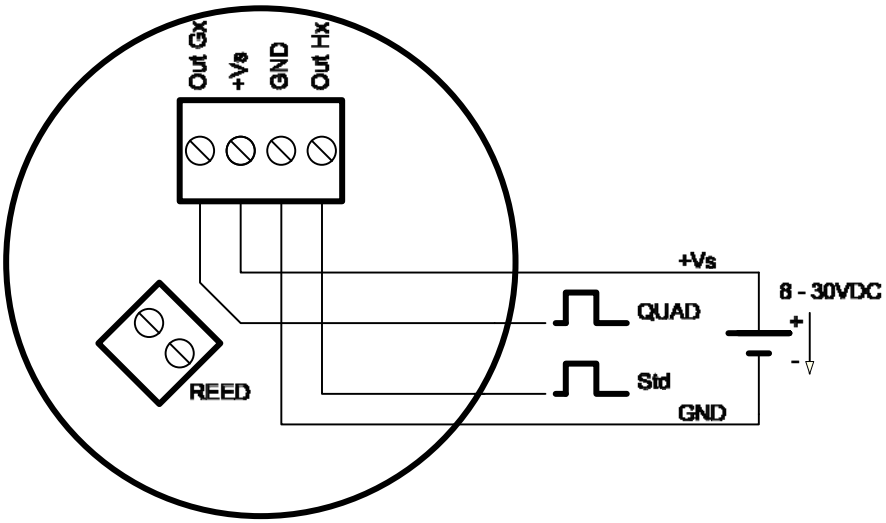

The current direction of the medium is defined as follows:

a.) Hx signal leading over Gx signal: Current flowing in the direction of the marked arrow (positive)

b.) Hx signal lagging behind Gx signal: Current flowing against the direction of the marked arrow (negative)

7.4 Internal wiring with electronic options -Ex/Zx

The Ex/Zx electronic options are pre-configured ex works in connection with the sensor boards. Reconfiguration is available on request.

7.4.1 For Z1/Z3 electronic options (reed switch and Hall sensor)

a) Wiring diagram with reed switch (ex works standard)

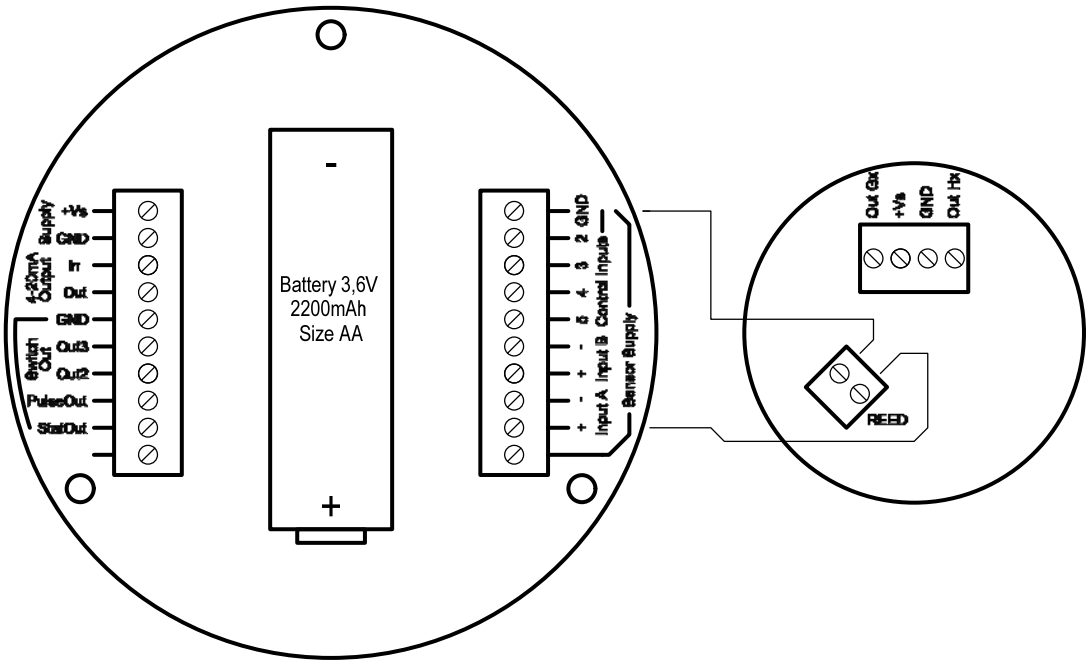

b) Wiring diagram with Hall sensor (recommended in connection with external supply)

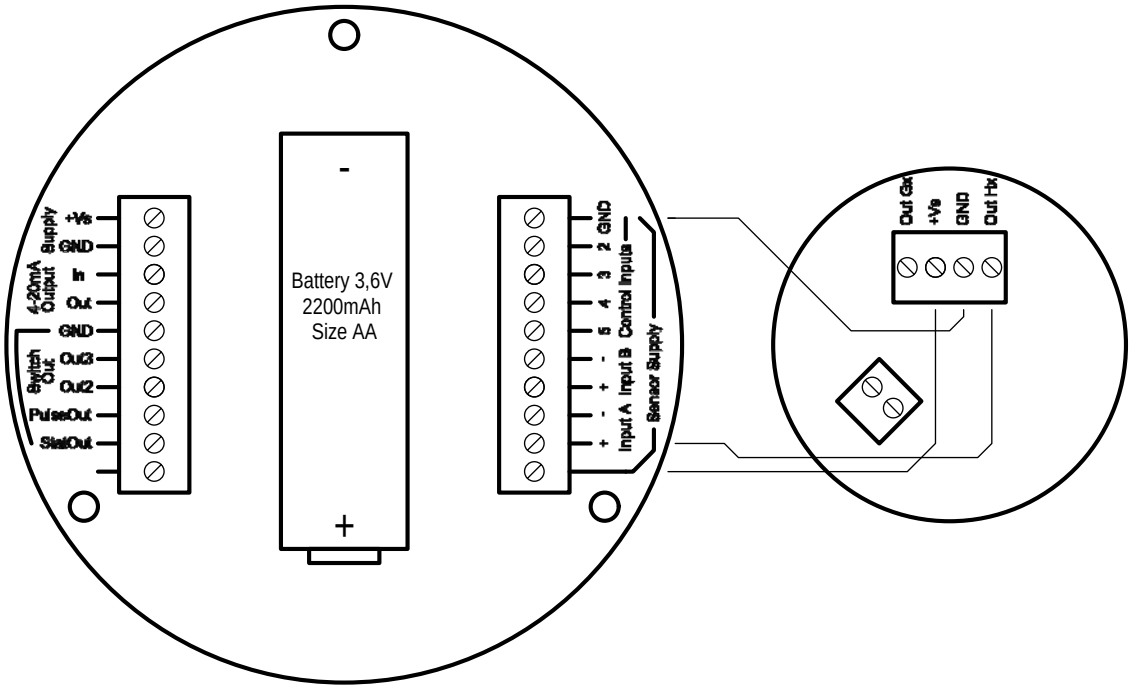

7.4.2 For Z6/Z7 electronics options (bipolar Hall sensor)

The circuitry corresponds to 7.4.1 b.)

7.4.3 For E1/E3 electronics options

The wiring is exclusively implemented with a reed switch (see 7.4.1.a). Within this wiring, the reed switch operates as simple apparatus and may be used in Zone 1.

7.4.4 For Z2/Z8/Z9 electronics options (2 Hall sensors for direction detection)

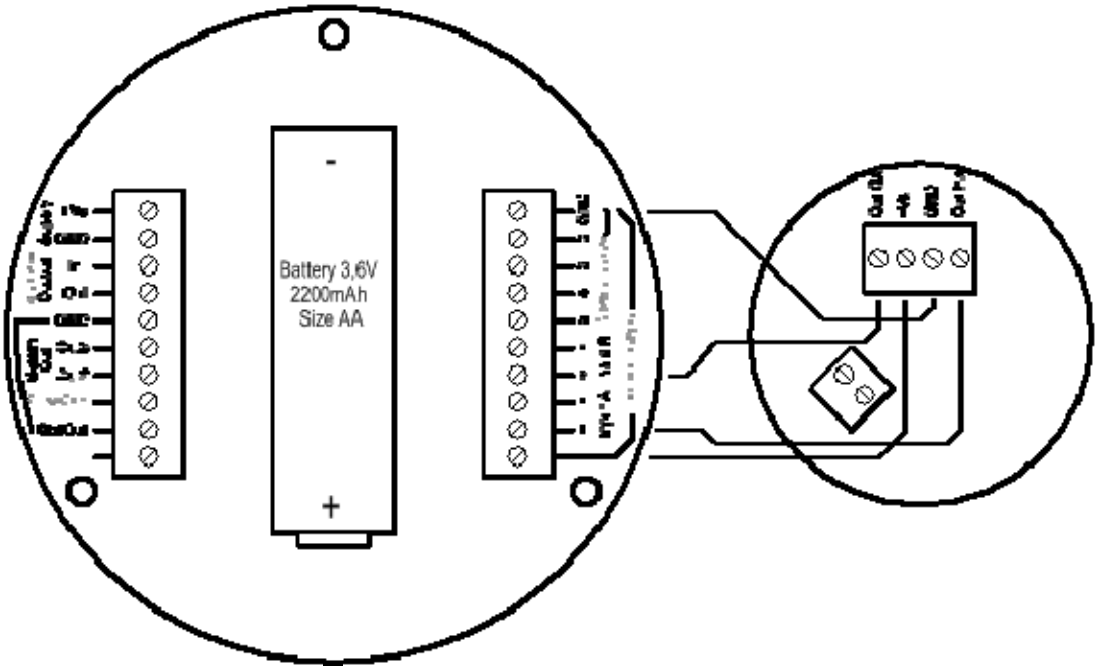

7.4.5 Analog output 4-20 mA, 2-line (L0/LE option)

The L0 and LE (explosion hazard) options include a loop-powered 4-20 mA output. The loop is powered by an external voltage source 16 – 32 VDC. The maximum working resistance of loads connected in series (PLC-analogue input / electronic displays) depends on the supply voltage level, namely:
Max. working resistance (ohms) = (+Vs – 9 VDC) / 0.02 A [ohms]
Example: +Vs = 32 VDC => max. working resistance = 1150 ohms
+Vs = 16 VDC => max. working resistance = 350 ohms
The load can be coupled at any point of the current loop, provided the polarity is correct.

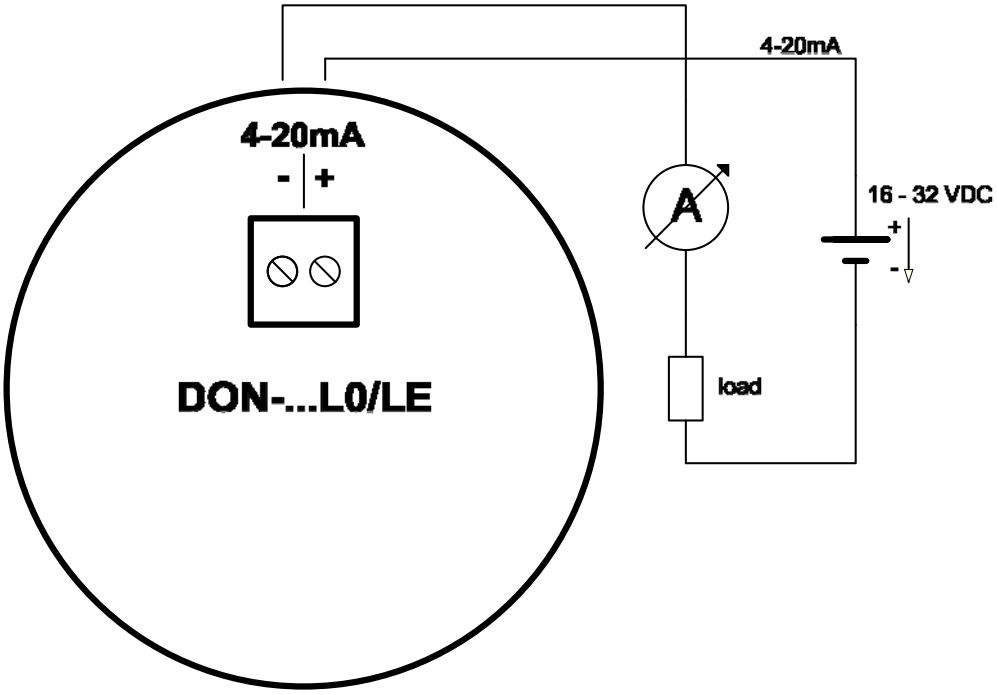

All DON devices with L0/LE options are factory-calibrated to the respective measurement range end value. This setting should only be modified by the manufacturer.

7.4.6 Calibration Factor (scale or K Factor)

The DON flowmeter is delivered with a factory calibration certificate. Within this certificate, a calibration factor is provided. The calibration factor is a specific representation of pulses per unit volume. (i.e. pulses per liter) for that specific meter.
Measurement devices with attached electronics are factory pre-configured to the corresponding calibration factor. Depending on the model, the calibration protocol is based on either the flow rate display or the analog output.
Please reference the appropriate digital display manual for programming details.

7.5 External wiring with electronic unit ZOK-Zx

7.5.1 Wiring with ZOK-ZxK

a) Circuit with Hall sensor (not for battery operation)

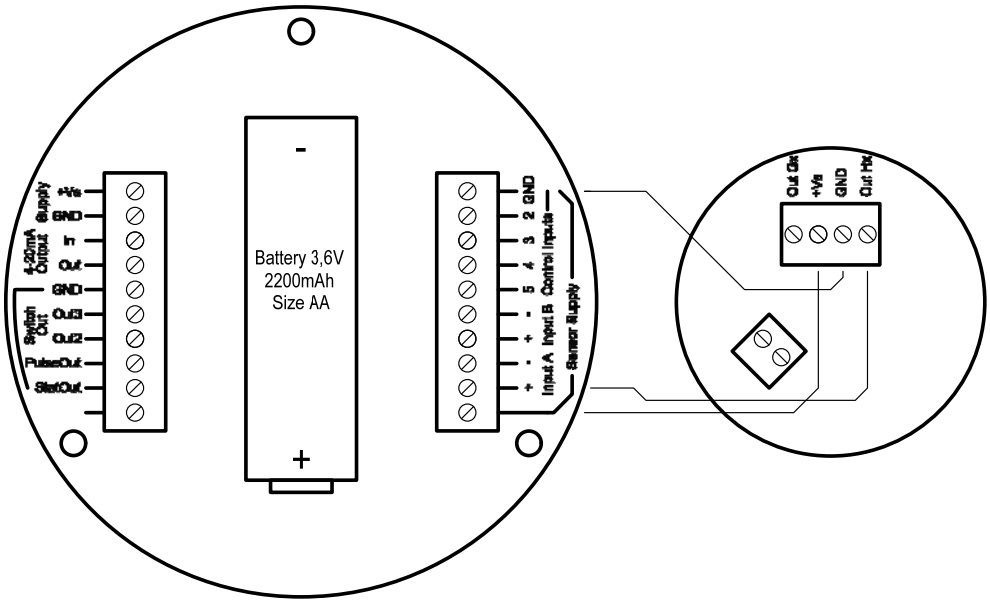

b) Circuit with Reed switch

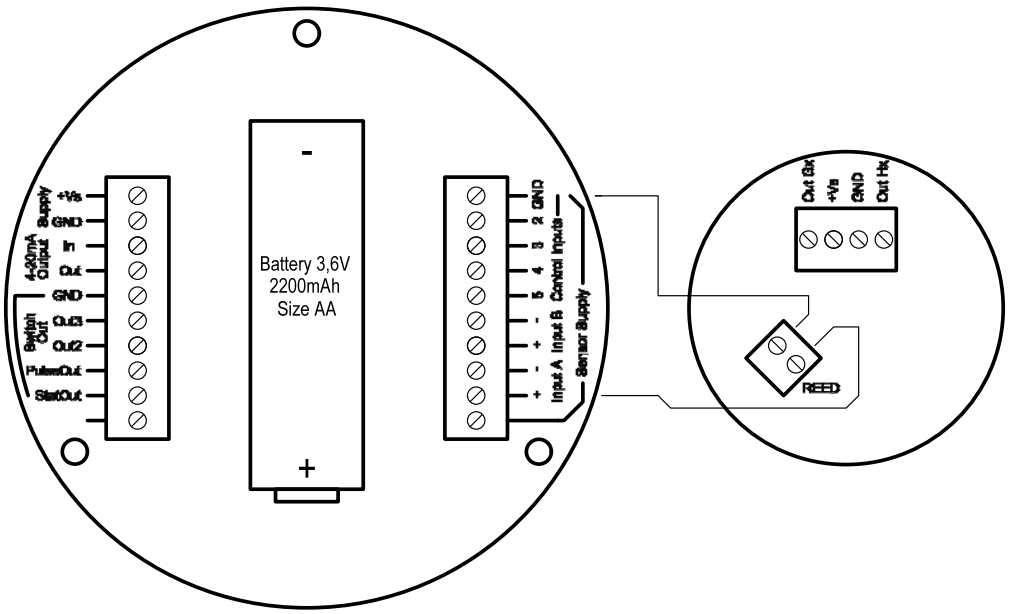

7.5.2 Wiring with ZOK-ZxP

a) Circuit with Hall sensor

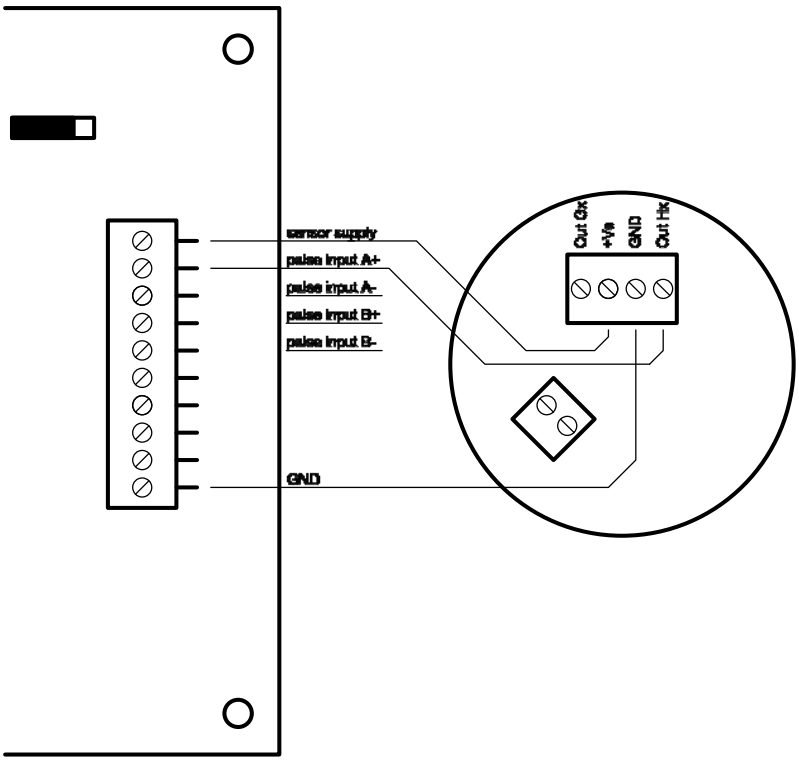

b) Circuit with Reed switch

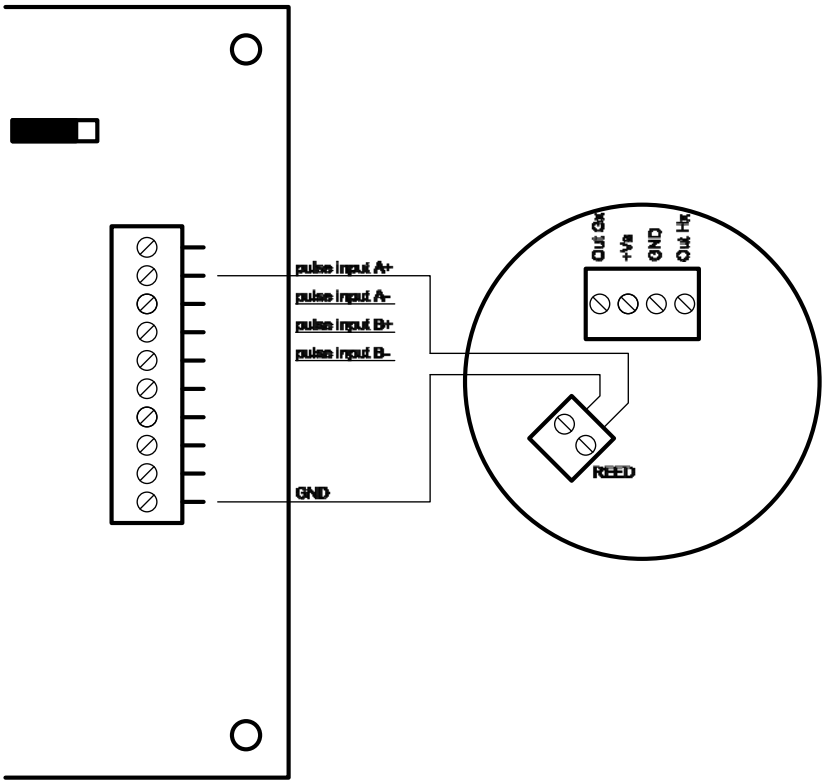

8. Commissioning

The piping MUST be flushed of debris before installation. Debris such as slag from welding, grinding dust, rust, pipe tape or sealing compound are common within new piping installations and will damage the flowmeter if not flushed or filtered from the process piping before installation and operation.

A by-pass system is common for frequent system flushing or frequent meter removal. If a by-pass system is not practical or possible, removal of the gears before flushing is necessary. (refer to section 9.1 “Disassembly of Pulse meter”).

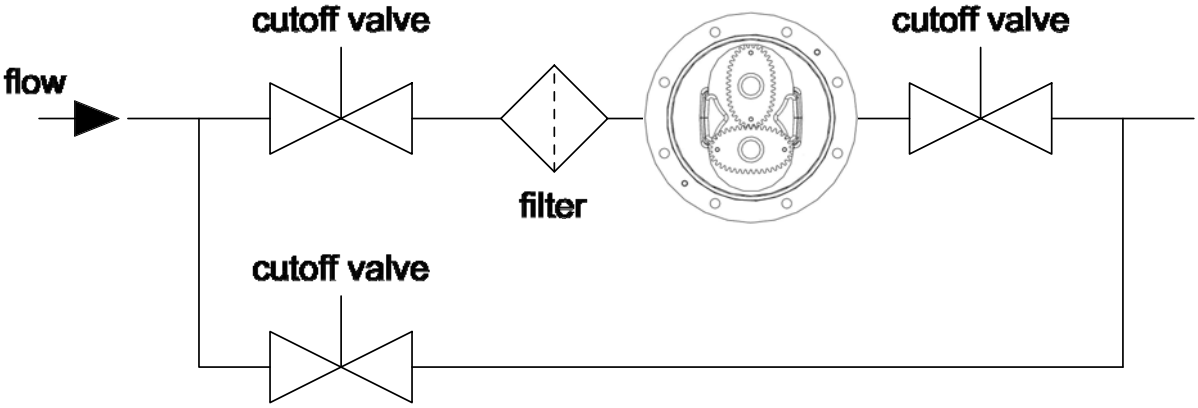

For proper operation the flowmeter must be purged of air. During long periods of inactivity or after a flushing, air may be in the piping. Elimination of the air may be achieved by operating the meter at a low flow rate until all the air is eliminated. Damage may occur to the flowmeter if it is run above the maximum rated flow rate or if the maximum differential pressure of 15 psi (1 bar, 100 kPa) is exceeded.

After mechanical and electrical installation according to the guidelines set forth within this user manual, the DON flowmeter is ready for operation.

9. Maintenance

Flowmeter maintenance precautions:

- Remove/disconnect power to the flowmeter.
- Ensure that flow supply to the meter is turned off and the system is not under pressure.
- Completely drain the flowmeter
- Confirm that any signal output(s) will not affect the system when de-energized or removed from the circuit.

Oval gear positive displacement flowmeters are mechanical by nature. A periodic maintenance/inspection schedule is suggested for an extended service life. Follow the guidelines within this user manual for the maximum flowmeter performance.

The maintenance/inspection schedule should be determined based off of application factors such as media type (abrasiveness, lubricity, and/or chemical compatibility), flow rate, and operating/maximum temperature and pressure.

9.1 Disassembly of DON with Pulse meter (Options Hx, Dx, Gx, Bx and Rx)

9.1.1 Pulse output board removal (refer exploded view diagram)

To remove the pulse output board, remove the 4 electronic cover screws (10), and remove the electronic cover (9). The pulse output board (6) can now be accessed and removed via the removal of the electronic board screws (7).

9.1.2 Oval gear removal for DON-x05…DON-x15 (refer exploded view diagram)

For access to the oval gears, remove the 4 lower meter body screws (5). With care, remove the upper meter body assembly (4) being careful not to damage or misplace the O-ring (3). You can then remove the oval gears (2).
For DON models DON-x05 to DON-x15, when disassembling, please notice the dimples located on the meter bodies (1 & 4) face just outside the o-ring groove. The referencing dimples must be in alignment when reassembling.

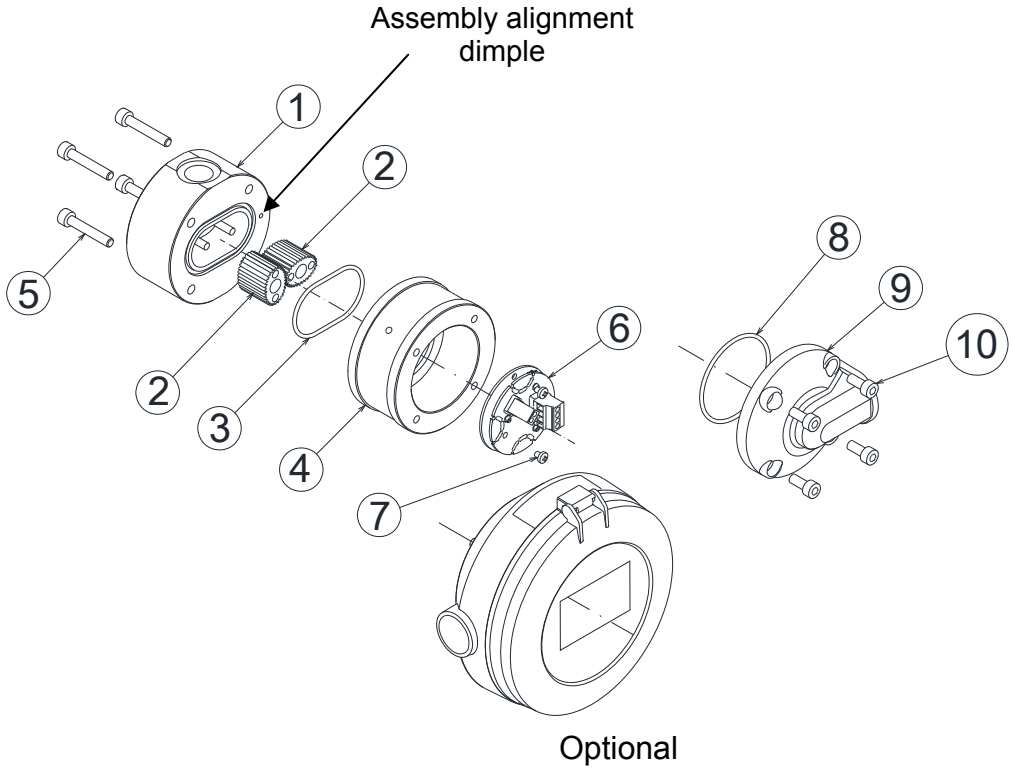

9.1.3 Removal of oval gears for DON-x20 (refer exploded view)

For access to the oval gears, remove the 6 upper meter body screws (5). With care, remove the upper meter body assembly (4) being careful not to damage or misplace the O-ring (3). You can then remove the oval gears (2).

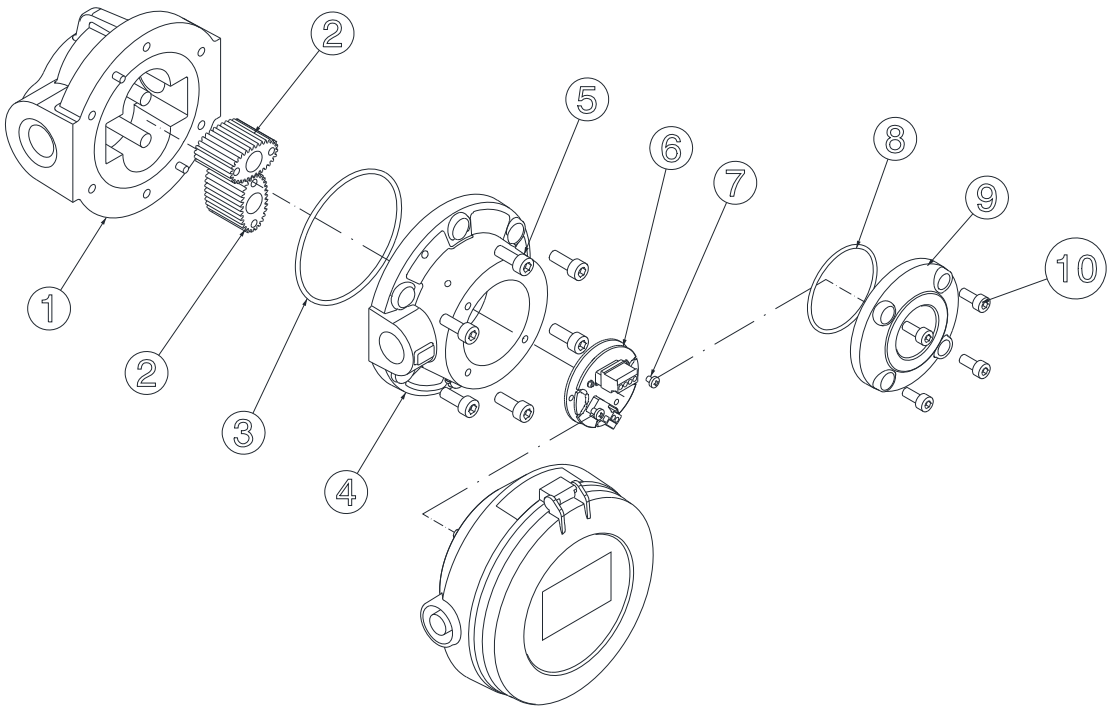

Optional

9.1.4 Removal of oval gears for DON-x25…DON-x40 (refer exploded view)

For access to the oval gears, remove the 8 upper meter body screws (5). With care, remove the upper meter body assembly (4) being careful not to damage or misplace the O-ring (3). You can then remove the oval gears (2).

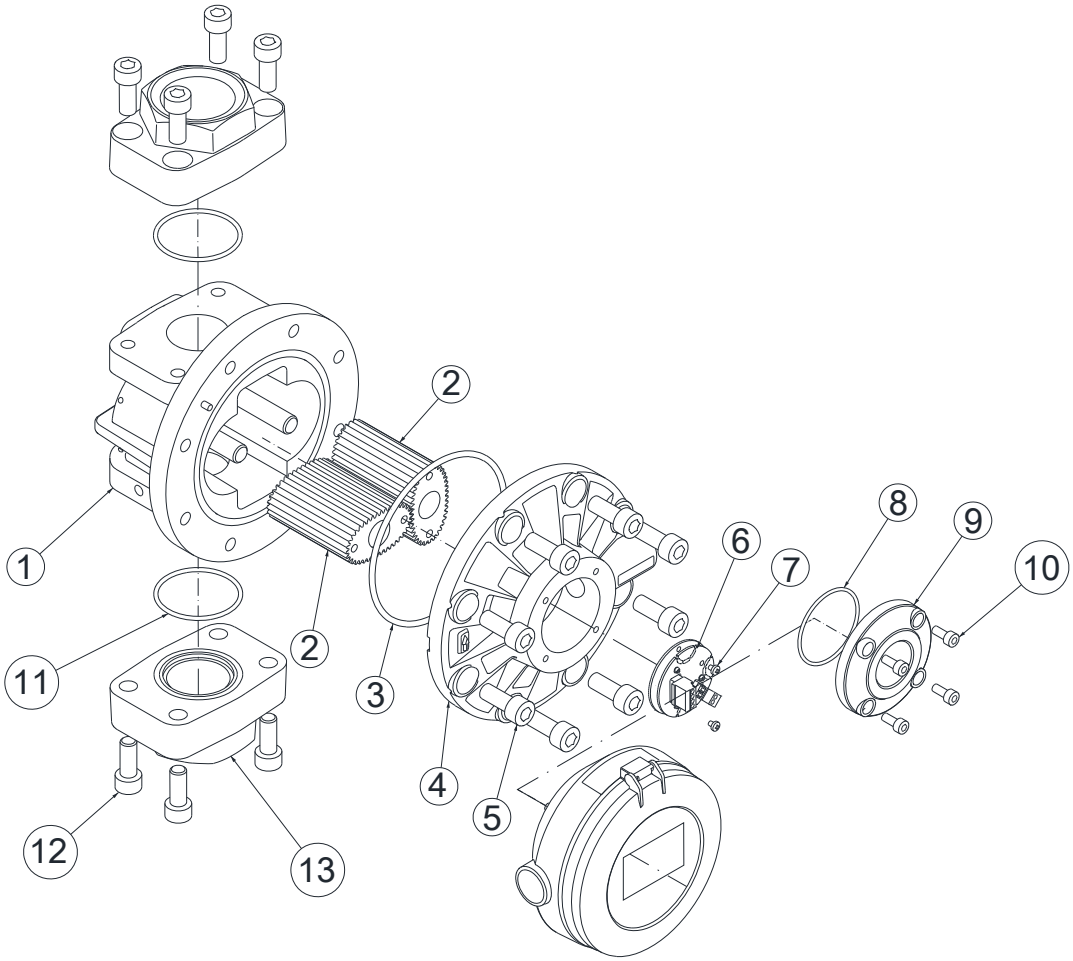

Optional

9.1.5 Removal of oval gears for DON-x45…DON-x60 (refer exploded view)

For access to the oval gears, remove the 8 upper body screws (5). With care, remove the upper body assembly (4) being careful not to damage or misplace the O-ring (3). You can then remove the oval gears (2).

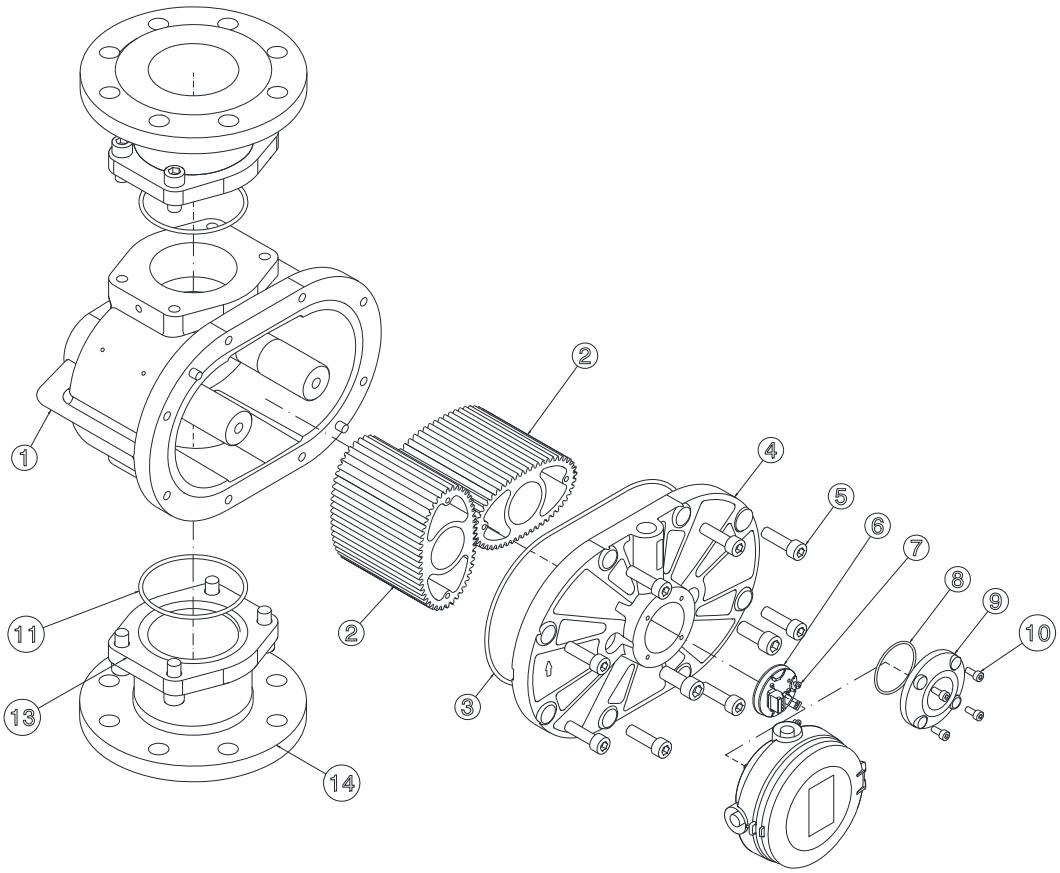

Optional

9.1.6 Structure of the DON-M4 mechanical counting mechanism

- Loosen three screws (10)
- Remove cover (9)
- Lift out counting mechanism (8)
- Remove seal (7)
- Loosen 4 screws (6)
- Remove lower housing section (5)
- Remove seal (4), washer (3) and seal (2).

When assembling, it is important to ensure the oval gear of (3) is correctly positioned relative to the counting mechanism (8). When mounting the counter mechanism, it is preferable to keep the DON in a horizontal position. This allows the counter mechanism (8) to be mounted distortion-free from above on the cone gear wheel (3).

DON-x20

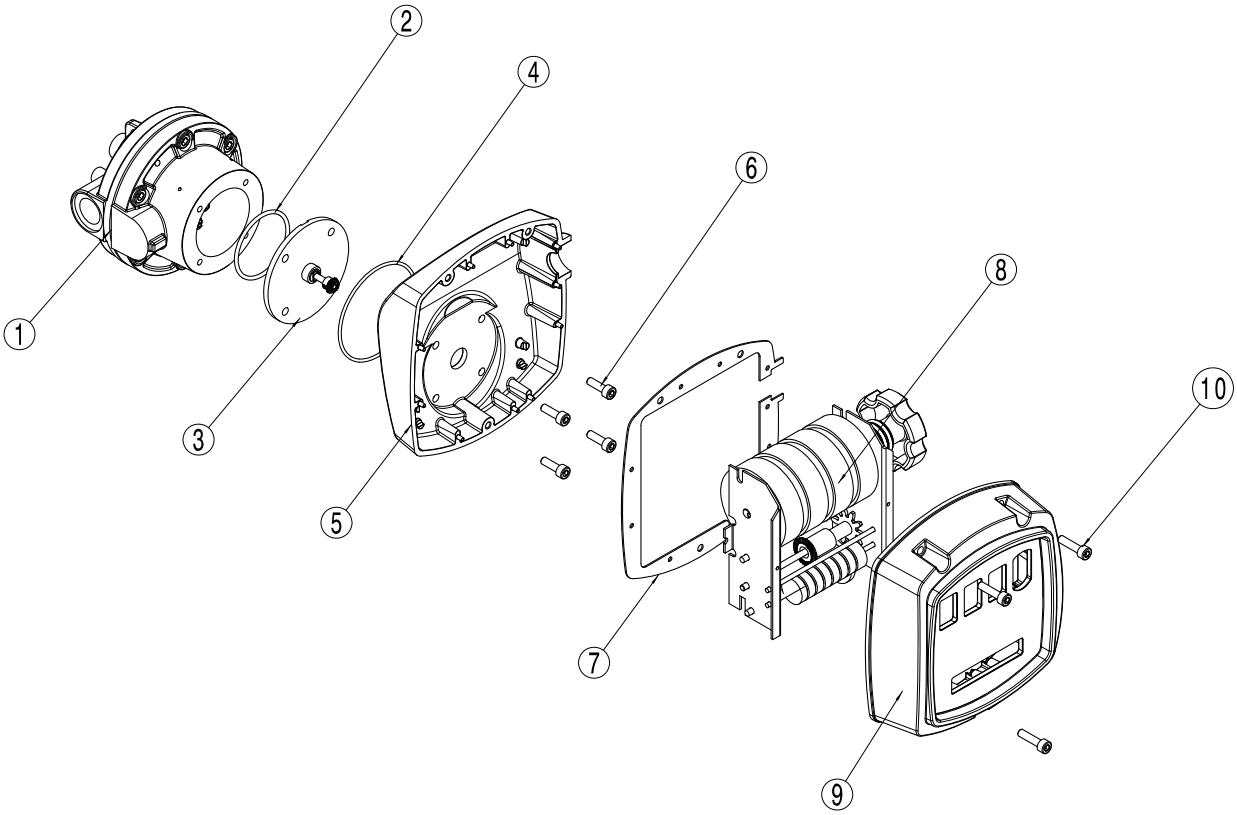

DON-x25 to x40

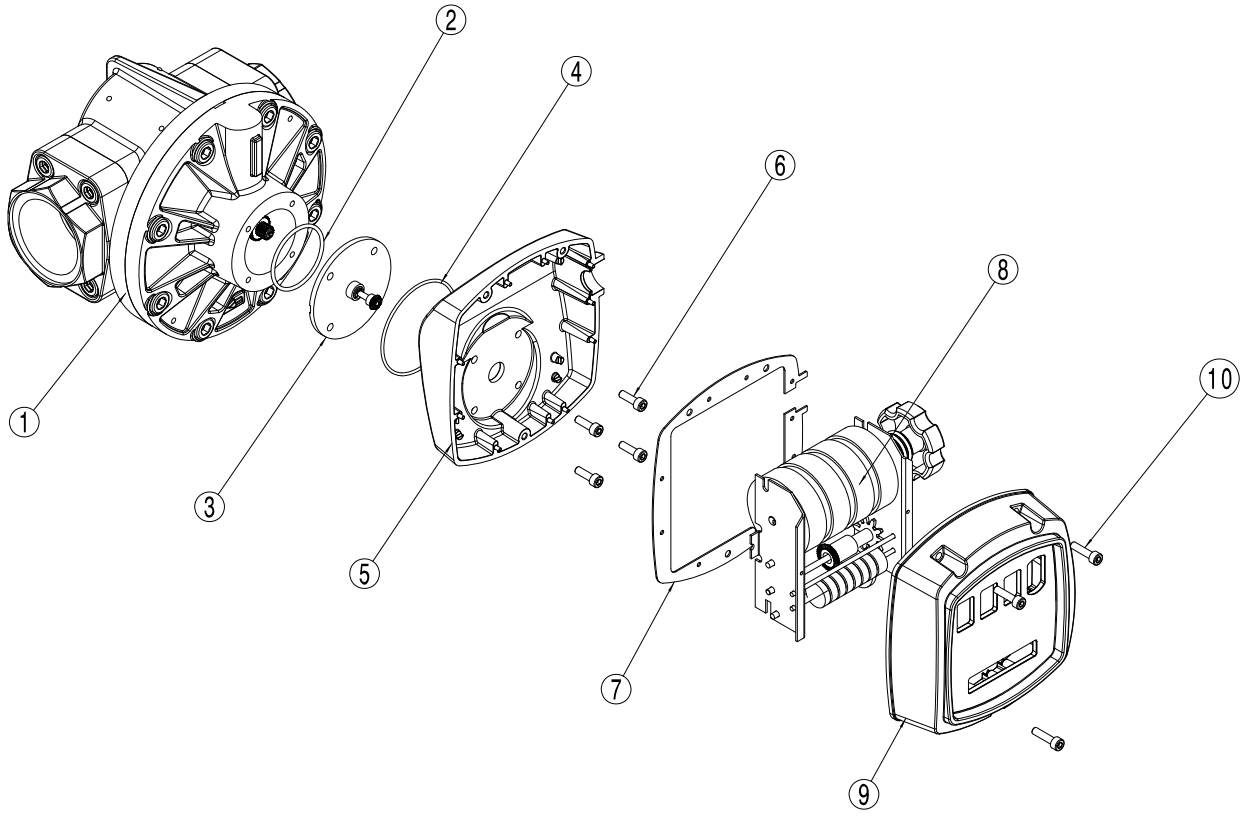

DON-x45 to x60

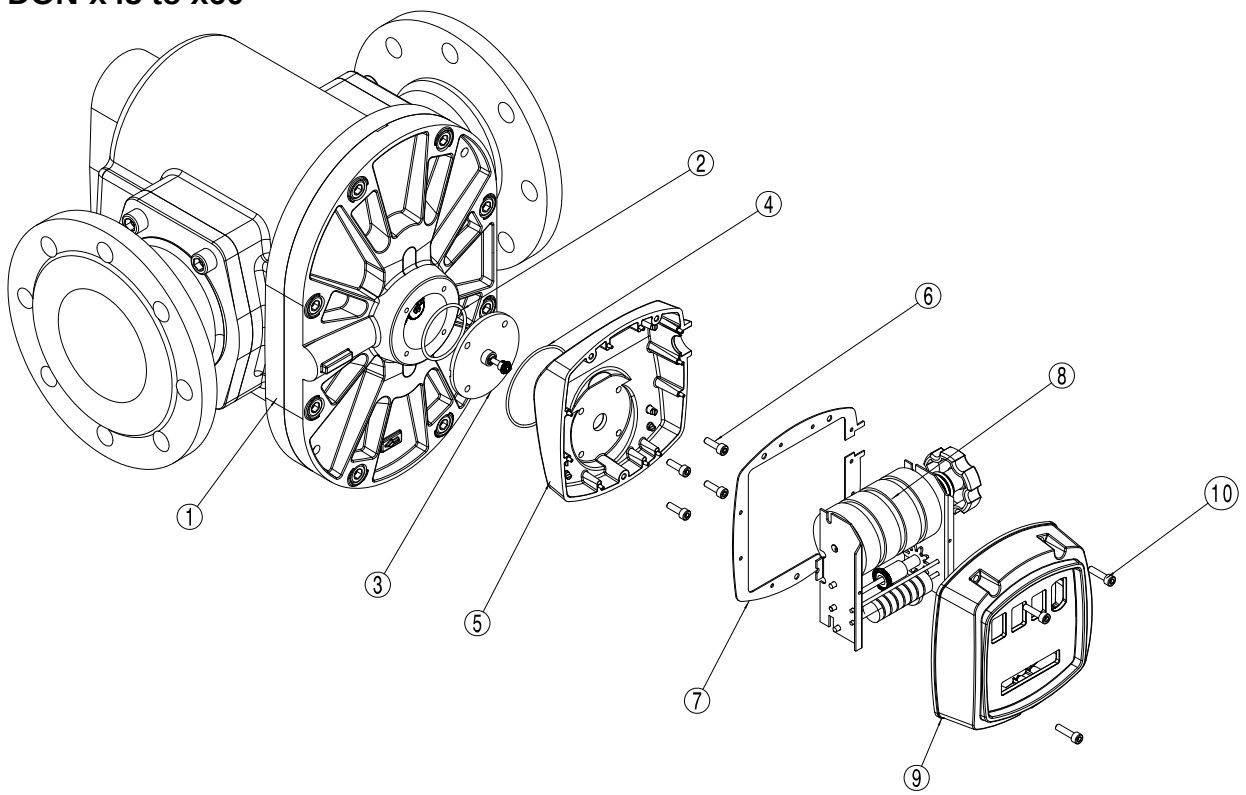

9.1.7 Adjusting the DON-M4 mechanical counter mechanism

The M4 mechanical counter display comprises a 4-digit mechanical totalizer (1) and an 8-digit sum display (2). Depending on the order option, the display is calibrated in either litres or gallons.
The totalizer display can be reset to zero by turning the function dial (3) in an anti-clockwise direction.

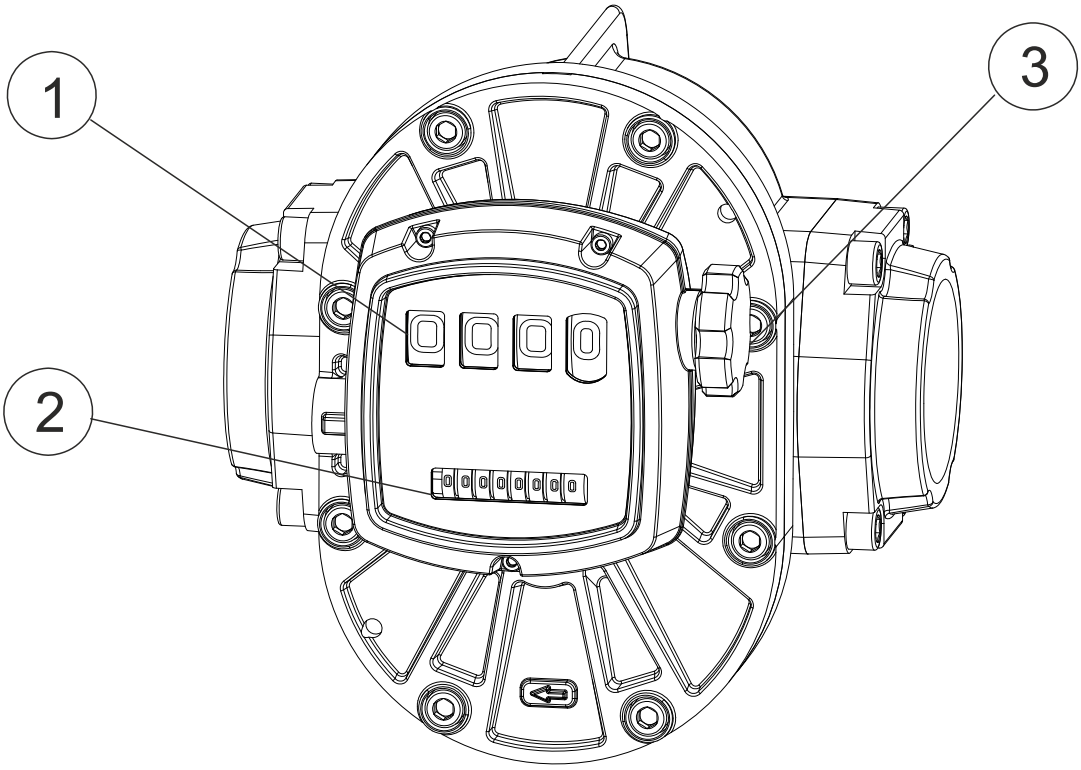

9.2 Demounting of the electronics mounted on a DON with Zx and Ex options

To access the device battery, terminal connections and pulse output board, the electronic cover with display must first be removed in case of flowmeters with built-in electronics. To do this, loosen the 4 screws of the display cover and carefully remove it without pulling out or damaging the connecting cable. During this procedure, be careful not to lose or damage the O ring. The terminal connection, device battery and pulse output board are now freely accessible. To remove the electronics, the screws used to connect the electronics housing to the oval gearbox housing should be loosened.

9.3 Spare Parts

Please consult your closest KOBOLD-Office
Internet: www.kobold.com or www.koboldusa.com

9.4 Inspection (refer Exploded View)

Inspection points will be the following:
O-rings – Inspect for physical or chemical damage or deformation.
Rotors – Inspect for physical damage due to unfiltered media or damage due to chemical attack. Also observe also the magnets, if exposed, for chemical attack.
Measuring Cavity – Inspect for physical damage (scoring) due to improperly filtered media or long term wear and tear.
Axle Shafts – Inspect for physical damage and ensure that the shafts are not loose and do not rotate.

9.5 Re-assembly of DON

Before re-assembly, please be sure to thoroughly clean all parts.
Care must be taken when reinstalling the rotors such that the magnets should face the pulse output board.

9.5.1 Re-assembly of DON-x05...DON-x15

For DON models DON-x05 to DON-x15, when re-assembling, please insert the rotor with the embedded magnet nearest to the dimple located on the meter body face just outside the o-ring groove. Install the rotors exactly perpendicular from each other (90° in orientation). They will only work if installed precisely. Manually test full rotation after installation as the rotors will not completely rotate freely unless installed precisely 90° from each other.

Proper placement of the O-ring within the groove is necessary for leak free operation. After placement, items (1 & 4) will then require assembly. For the small 4 mm and 6 mm flowmeters, reference the alignment dimples on the lower meter body and upper meter body (1 & 4) for proper assembly.

Tighten the meter bodies (1 & 4) with the screws (5) in an alternating pattern (1, 3, 2, 4). Tighten to each to a torque of 3.5 Nm. The alternating tightening procedure is preferred for proper and even assembly.

Install the pulse output board, the o-ring into the provided groove, and then install either the pulse output board cover (9) or optional electronic assembly.

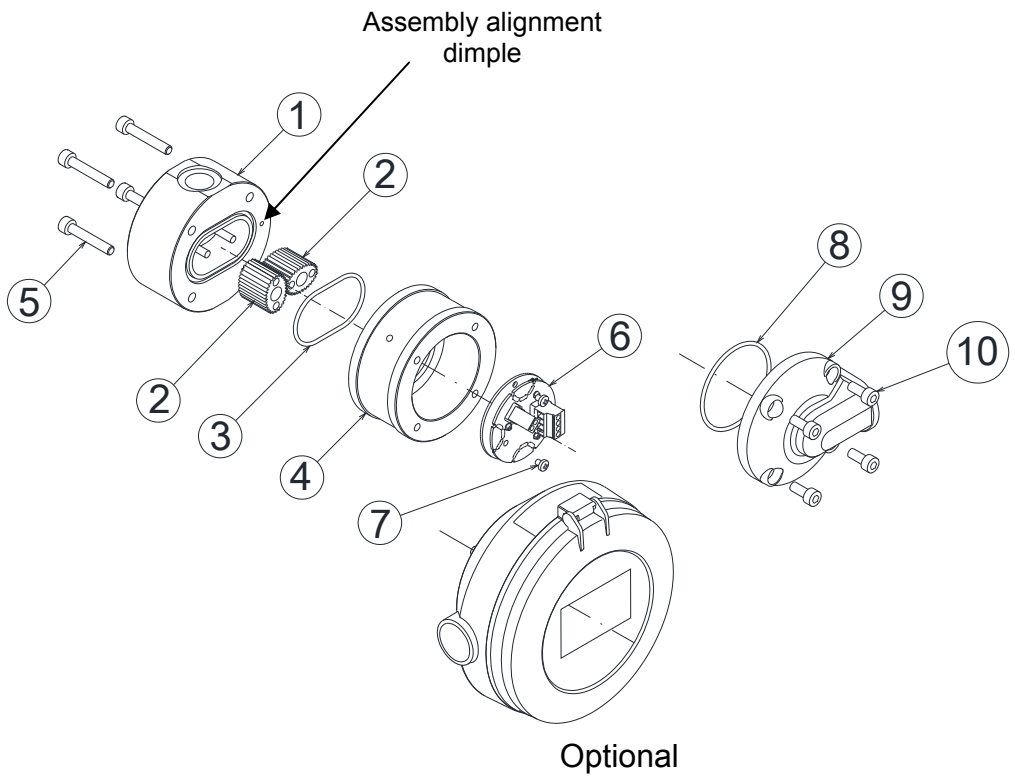

9.5.2 Re-assembly of DON-x20...DON-x40

Both oval gears are placed on the axle shafts with the magnets oriented towards the upper meter body (4). Verify that the axle shafts are not loose. Both oval gears are equipped with embedded magnets, allowing them to each be mounted on either axle.
Install the rotors exactly perpendicular from each other (90° in orientation). They will only work if installed precisely. Manually test full rotation after installation as the rotors will not completely rotate freely unless installed precisely 90° from each other.

Proper placement of the O-ring within the groove is necessary for leak free operation. After placement, items (1 & 4) will then require assembly.

Tighten the upper meter body to the lower meter body (1 & 4) with the screws (5) in an alternating pattern (1, 3, 2, 4). Tighten to each to a torque of 3.5 Nm. The alternating tightening procedure is preferred for proper and even assembly.

Install the pulse detector board, the o-ring into the provided groove, and then install either the electronic cover (9) or optional electronic assembly.

Exploded view of DON-x25...DON-x40

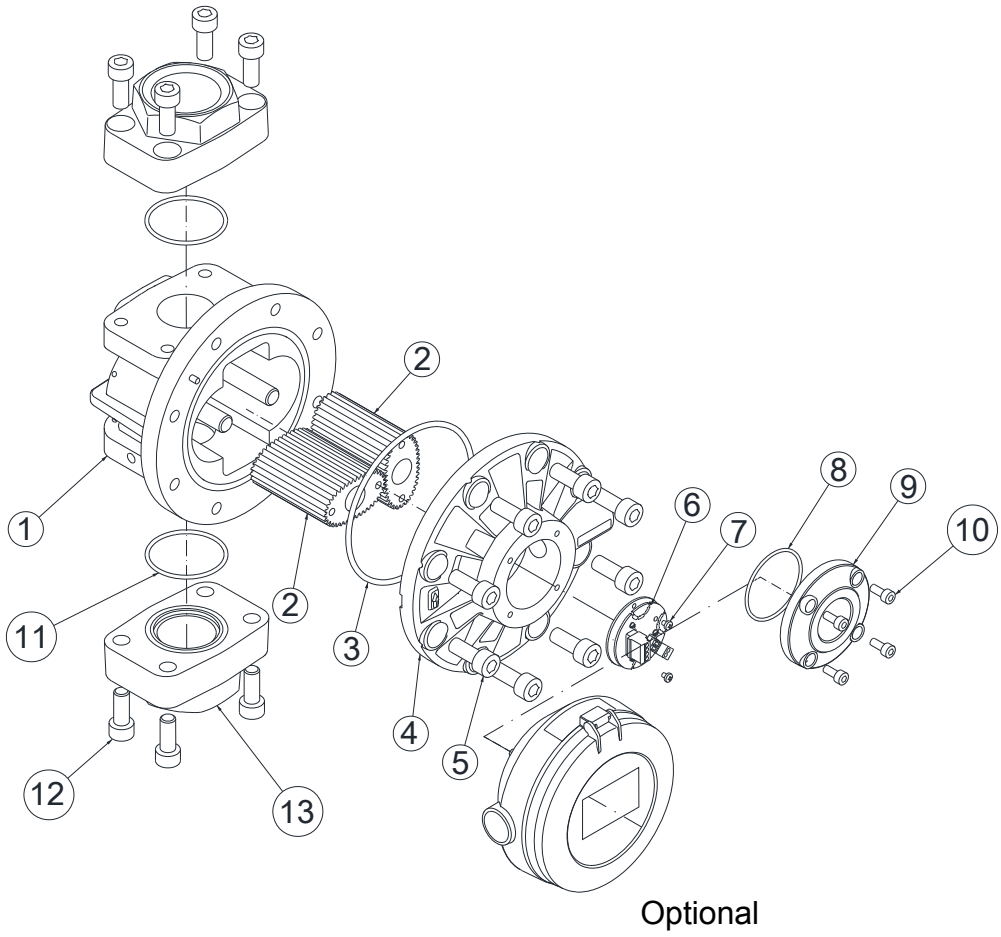

Exploded view of DON-x45...DON-x60

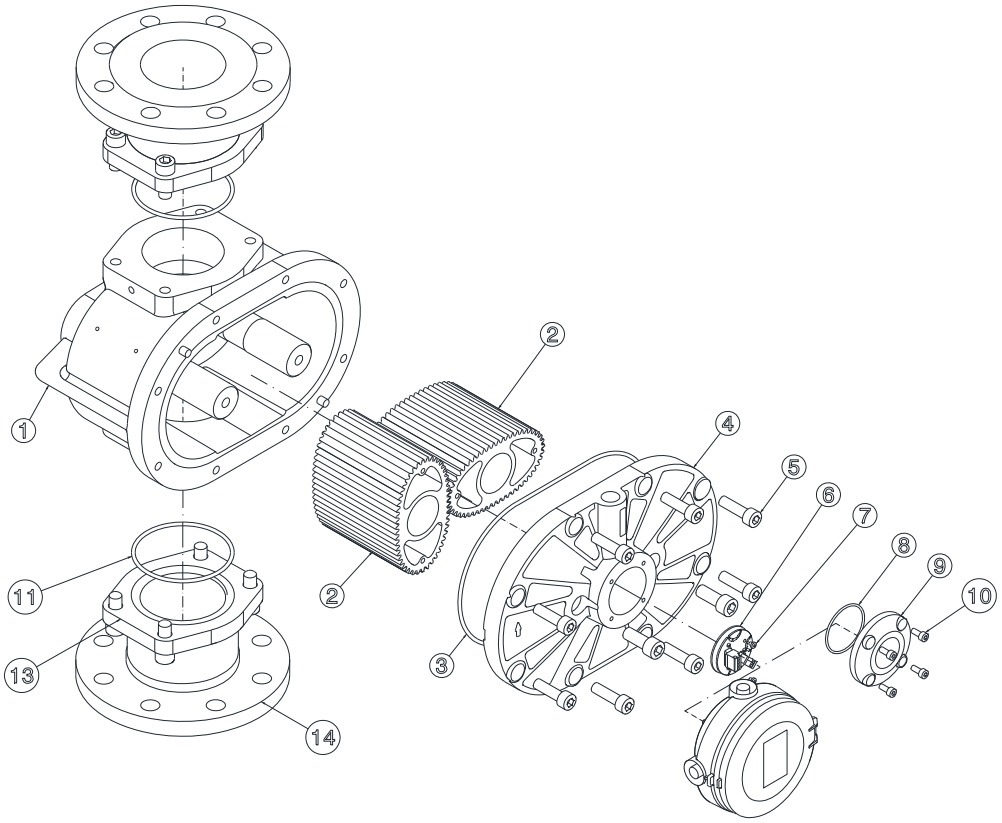

Optional

10. Technical Data

Material:

DON-1

Body:	aluminum
Oval gears:	PPS GF 30/PTFE
Axes:	stainless steel 1.4404

DON-2

Body:	stainless steel 1.4404 DON-x05…DON-x15 stainless steel 1.4404/1.3955 DON-x20…DON-x60
Oval gears:	stainless steel 1.4404 DON-x05…DON-x40 stainless steel 1.3955 DON-x45…DON-x60
Bearing:	carbon graphite
Axes:	stainless steel 1.4404

DON-8

Body:	stainless steel 1.4404 DON-x05…DON-x15 stainless steel 1.4404/1.3955 DON-x20…DON-x60
Oval gears:	PPS GF 30/PTFE
Axes:	stainless steel 1.4404

O-Rings:	medium temperature FKM: -20..+120 °C, NBR: -20..+100 °C FEP-O-seal/FKM: -25…+130 °C
Cover for cable connection:	polyamide PA6 GF35 UL94 HB/VO DON-1 stainless steel 1.4404 DON-2 und DON-8
Accuracy:	± 1 % of reading (DON-x05..DON-x15) ± 0.5 % of reading (DON-x20..DON-x60) ± 0.2 % of reading (DON-x20..DON-x60); with optional Z3/E3-electronics based on linearization function ± 1 % of reading (option M)
Additional max. inaccuracy for analog outputs:	± 0,15 % ME
Repeatability:	typ. ± 0.03 %
Protection class:	IP 66/67 (IP65 for M4)
Medium temperature:	-20...+80 °C for options –L0, Z, M4 and -20 °C…+120 °C for pulse output and options Z with cooling fins
Ambient temperature:	-20...+80 °C, option M4 0 °C…+60 °C
Cable entry:	M20x1.5, ½“ NPT
ATEX approval (option E1/E3):	Ex II 2G EEx ia IIB T4 (-20 °C ≤ Ta ≤ + 60 °C)
(option HE, BE, DE, GE, LE, RE):	Ex II 2G Ex d IIC T6 (-20 °C ≤ Ta ≤ + 70 °C) Ex II 2G Ex d IIC T4 (-20 °C ≤ Ta ≤ + 120 °C) Ex I M2 Ex d I Mb (st. steel models only)

R0/RE electronics options:	max. switching voltage:	30 V_{DC}
(Reed switch pulse output)	max. switching current:	200 mA
	max. switching capacity:	10 W
	Service life:	> $2*10^6$ switching cycles (at 5 V_{DC} and 10 mA)

H0/HE/B0/BE electronics options:

	Supply voltage:	8 to 30 V_{DC}
(Hall sensor + reed switch pulse output)	Supply current:	max. 5 mA (without load)
(B0/BE not for x05)	Hall pulse output:	active push-pull, max. 100 mA, short-circuit-proof HIGH level: Min. +Vs - 1.3 V LOW level: max. 1.3 V
	Reed pulse output:	as for R0/RE

G0/GE electronics options:	Supply voltage:	8 to 30 V_{DC}
(Pulse output hall sensor	Supply current:	max. 8 mA (without load)
High resolution, only X05/X10)	Hall pulse output:	like H0/HE

D0/DE electronics options:	Supply voltage:	8 to 30 V_{DC}
(2x Pulse output hall sensor)	Supply current:	around 8 mA_{DC}
	Hall pulse output:	like H0/HE
	Current direction:	positive: Hx leading over QUAD negative: QUAD leading over Hx
L0/LE electronics options:	Supply voltage:	16 to 32 V_{DC}
(Current output 4-20mA)	Analog output:	4 20 mA, 2-wire
	Max. working resistance:	750 ohms (at 24 V_{DC})
Z1/Z2/Z3 electronics options (common properties):		
	Supply voltage:	8 to 32 V_{DC}
	Battery operation (only Z1/Z3)	
	Battery:	3.6 V/2200 mA AA size
	Display:	LCD, graphic 128x64 Backlighting adjustable
	Operation:	4 buttons
	Housing:	plastic, PA6, GF-reinforced
	Cable inlet:	3x M20x1.5, prepared
	Electrical connection:	plug-in terminals
Z1 electronics option:	Signal inputs:	2x, configurable
(Dual counter)	Daily/overall counter:	1x per input
	Signal outputs:	none
Z2 electronics option:	Signal inputs:	1x, configurable
(Batching device)	Batching function:	2-stage
	Signal outputs:	relay output
Z3 electronics option:	Signal inputs:	2x, configurable
(Flow controller)	Signal outputs:	current output 4-20 mA 2-wire / 3-wire pulse output, scalable status output
	Max. working resistance of current output:	750 ohms (at 24V_{DC})
M4 mechanical counter:	4-digit quantity indication in litres or gallons 8-digit sum display	

Maximum Pressure (threaded version)

<table>
<tr><th rowspan="2">Model</th><th colspan="4">Maximum pressure (bar)</th></tr>
<tr><th>DON-1</th><th>DON-2/8</th><th>DON-1.. (option - M4)</th><th>DON-2/8 (option – M4)</th></tr>
<tr><td>DON-x05</td><td rowspan="5">64</td><td rowspan="5">100</td><td>-</td><td>-</td></tr>
<tr><td>DON-x10</td><td>-</td><td>-</td></tr>
<tr><td>DON-x15</td><td>-</td><td>-</td></tr>
<tr><td>DON-x20</td><td rowspan="4">40</td><td rowspan="3">40</td></tr>
<tr><td>DON-x25</td></tr>
<tr><td>DON-x30</td><td rowspan="2">40</td><td rowspan="2">50</td></tr>
<tr><td>DON-x35</td><td>30</td></tr>
<tr><td>DON-x40</td><td rowspan="5">16</td><td rowspan="5">16</td><td rowspan="5">16</td><td rowspan="5">16</td></tr>
<tr><td>DON-x45</td></tr>
<tr><td>DON-x50</td></tr>
<tr><td>DON-x55</td></tr>
<tr><td>DON-x60</td></tr>
</table>

with flanges, maximum pressure rating is above or as per flange rating, whichever is lower

Max. Flowrate Multiplier (for higher viscosities)

Viscosities (cP)	Standard rotor	Special cut rotor
≤ 1000	1	1
≤ 2000	0,5	1
≤ 4000	0,42	0,84
≤ 6000	0,33	0,66
≤ 8000	0,25	0,5
≤ 30000	0,15	0,3
≤ 60000	0,12	0,25
≤ 150000	0,1	0,2
≤ 250000	0,05	0,1
≤1000000	0,025	0,05

Special cut rotors for higher viscosities
For viscosity > 1000 cP, special cut rotors option „S“ should be used to reduce pressure drop. This applies to DON-x15 and larger sizes. For higher viscosities, the flowmeter max. flowrate is de-rated according to the attached chart.
Example: DON-x25 measuring oil at 8 000 cP,
max. flow 150 LPM x 0.5 = 75 LPM new maximum flow rate.

Output Pulse Resolution

Model	Measuring range [l/min]	Pulse / liter				
		Reed switch Rx	Hall sensor Hx	Hall sensor Bx	Quadr. hall sensor Dx	Hall sensor high resolution Gx
DON-X05	0,5 - 36 L/h	*2670*	*2670*	-	*2670*	*11320*
DON-X10	2 - 100 L/h	*1054*	*1054*	-	*1054*	*4210*
DON-X15	15 - 550	*355*	*710*	*355*	*710*	-
DON-X20	1-40	*82*	*163*	*82*	*163*	-
DON-X25	10 - 150	*26*	*103*	*52*	*52*	-
DON-X30	15 - 250	*14*	*55*	*27*	*27*	-
DON-X35	30 - 450	*6,4*	*25,5*	*13,5*	*13,5*	-
DON-X40	50 - 580	*4,9*	*19,6*	*9,8*	*9,8*	-
DON-X45	35 - 750	*2,57*	*10,3*	*5,15*	*5,15*	-
DON-X50	50 - 1000	*1,5*	*5,9*	*3*	*3*	-
DON-X55	75 - 1500	*1,05*	*4,2*	*2,1*	*2,1*	-
DON-X60	150 - 2500	*0,56*	*2,3*	*1,15*	*1,15*	-

The values in above mentioned table are only approximate guidelines. The actual value for pulse rate can deviate up to +/- 3% from the values in this table and is mentioned in calibration certificate delivered with the flowmeter.

11. Pressure drop curves

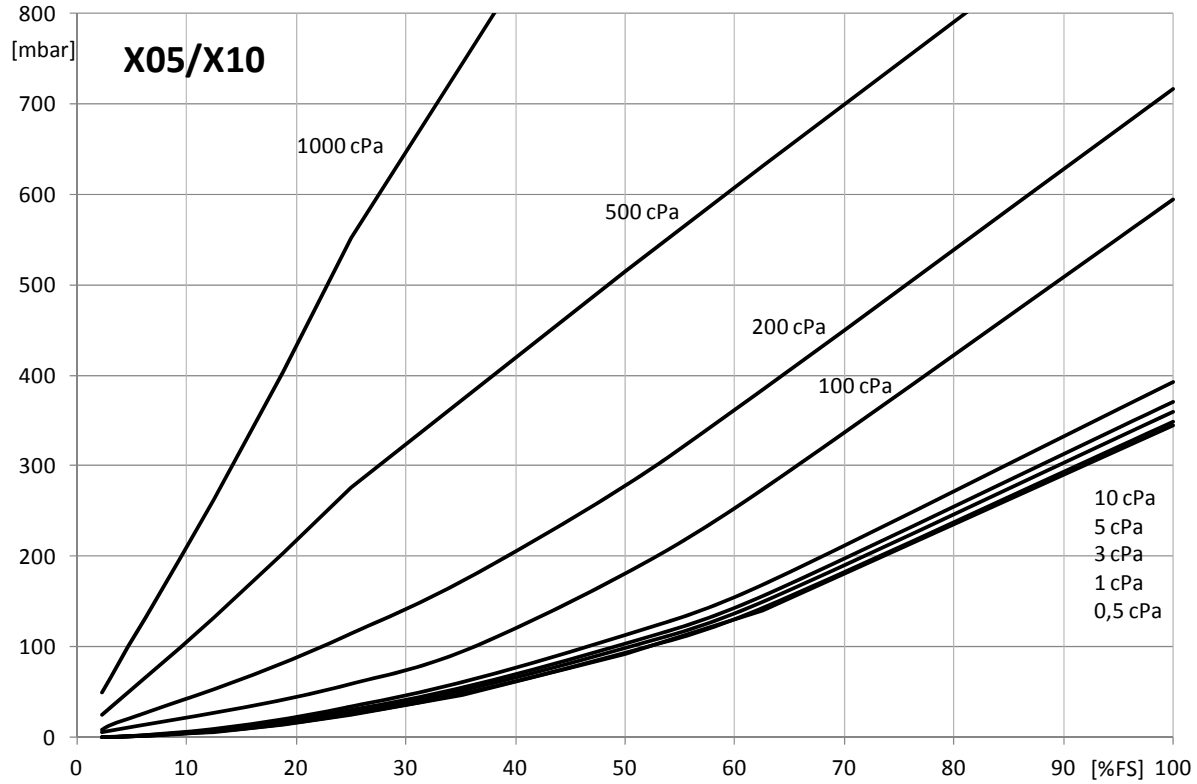

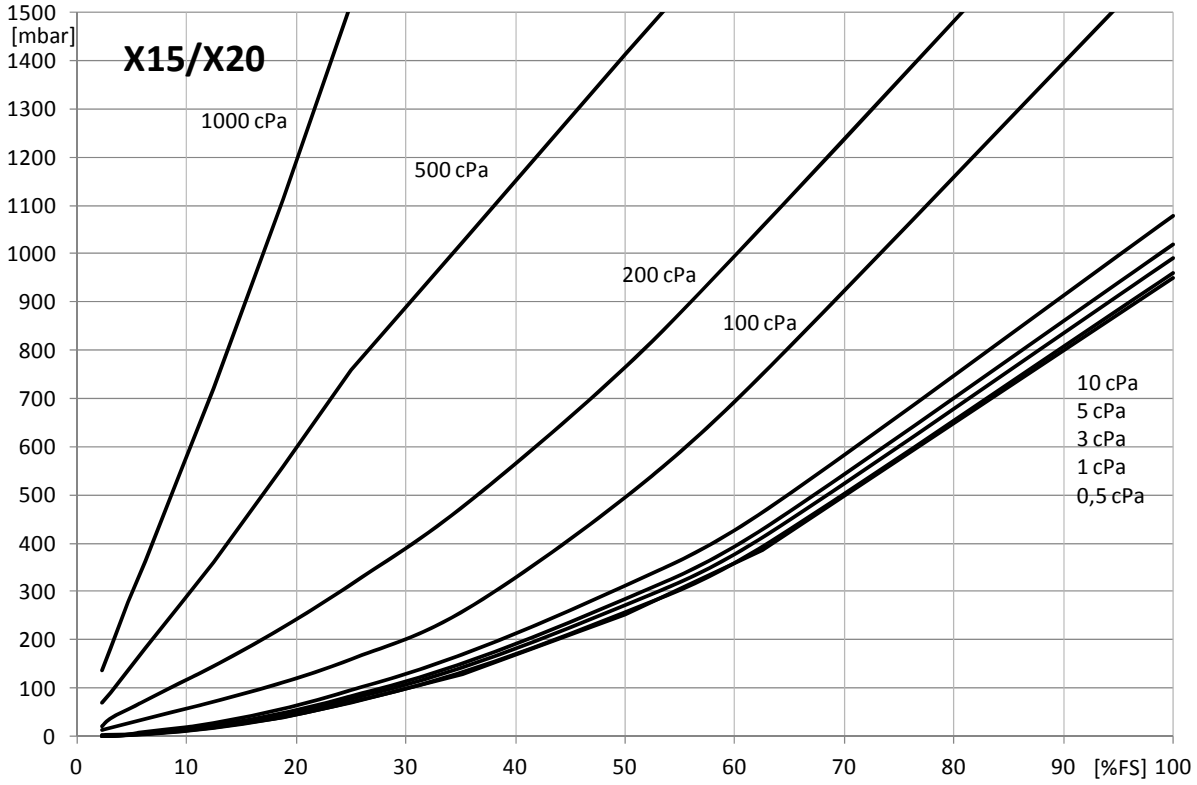

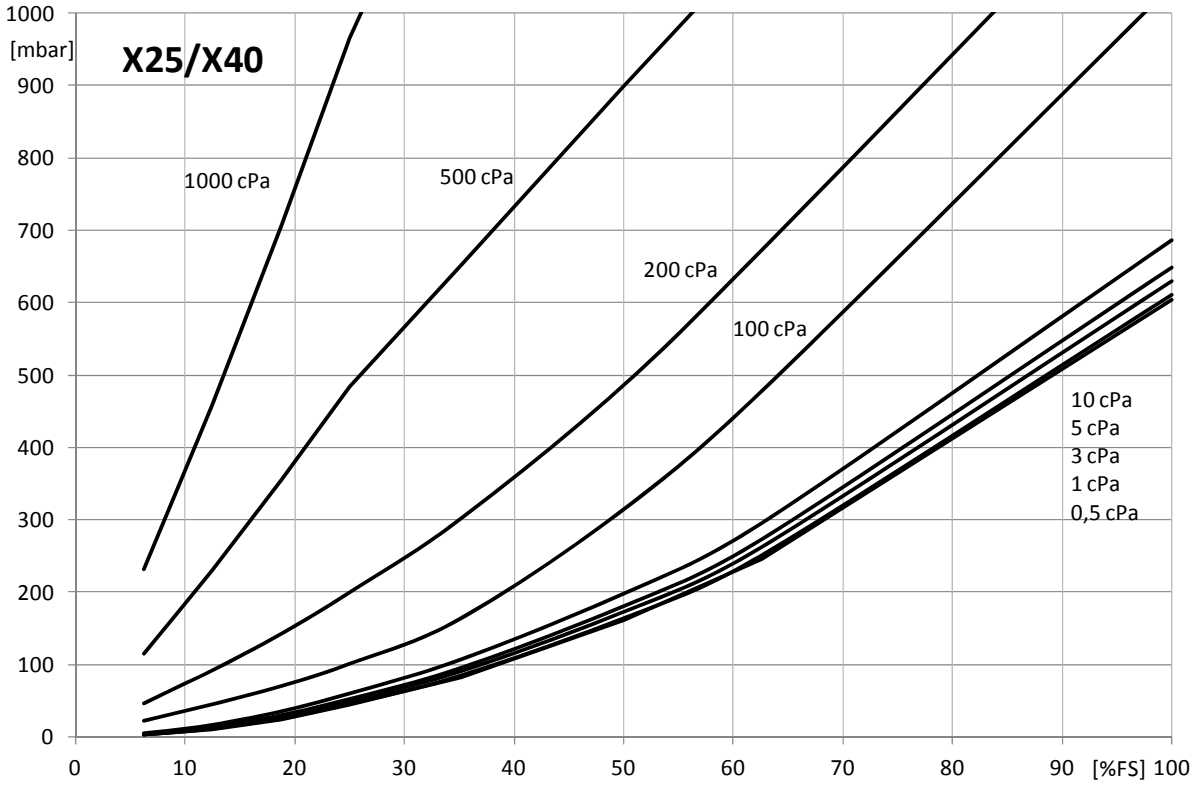
X25/X40
[mbar]
1000
900
800
700
600
500
400
300
200
100
0
1000 cPa
500 cPa
200 cPa
100 cPa
10 cPa
5 cPa
3 cPa
1 cPa
0,5 cPa
0
10
20
30
40
50
60
70
80
90
[%FS]
100

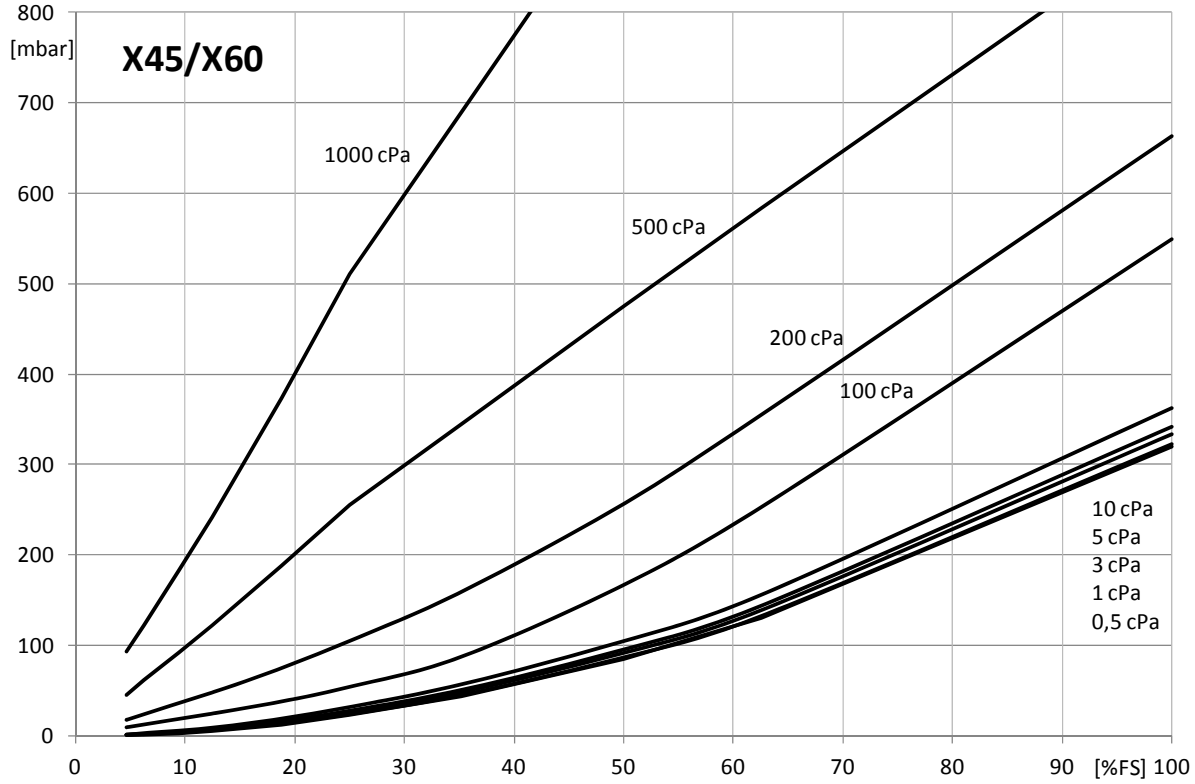
X45/X60
[mbar]
800
700
600
500
400
300
200
100
0
1000 cPa
500 cPa
200 cPa
100 cPa
10 cPa
5 cPa
3 cPa
1 cPa
0,5 cPa
0
10
20
30
40
50
60
70
80
90
[%FS]
100

12. Order codes

Example: DON-105H R1 1 L0 M 0

Measuring range [l/min]	Housing material: Aluminium with PPS Rotor	Housing material: Stainless steel	Housing material: St. st. with PPS rotor	Connection	O-Ring Material	Electronics	Cable gland	Option
0.5 – 36 l/h	**DON-105H**	**DON-205H**	**DON-805H**	**R1** = G ⅛ **N1** = ⅛ NPT	**1** = FKM **3** = FEP-Coated FKM **4** = NBR	**L0** = 4…20 mA „loop“ powered“ analog output **LE** = as L0 + ATEX (Exd) **R0** = Reed switch pulse output **RE** = reed switch Pulse output ATEX (Exd) **H0/B0** = hall sensor (Push-Pull)/ reed switch, pulse output **HE/BE** = as H0 + ATEX (Exd) **G0**[2)] = hall-sensor (Push-Pull), high resolution **GE**[2)] = as G0 + ATEX (Exd) **D0** = Quad. Hall sensor 2 phased outputs (Push-Pull), **DE** = as D0 + ATEX (Exd) **Z1** = dual LCD totalizer **Z2** = Batching unit LCD **Z3** = LCD totalizer/ rate, output: 4-20 mA, alarm, pulse (ZOK-Z3) (pulses not for battery supply **Z6** = Z1 + B0 **Z7** = Z3 + B0 **Z8** = Z1 + D0 **Z9** = Z3 + D0 **E1** = as Z1 + ATEX (Exi) **E3** = as Z3 + ATEX (Exi) **M4** = mech. totalizer 4-digit	**0** = without (only for option M4) **M** = M20 **N** = ½“ NPT **S** = M20 + cooling fin [3)] **T** = ½“ NPT + cooling fin	**0** = without **K** = check valve (from DON-x30) **S** = special cut rotor for higher viscosities **Y** = special option, (specify in clear text)
2 – 100 l/h	**DON-110H**	**DON-210H**	**DON-810H**	**R2** = G ¼ **N2** = ¼“ NPT				
15 – 550 l/h	**DON-115H**	**DON-215H**	**DON-815H**	**R3** = G ⅜ **N3** = ⅜“ NPT				
1 – 40	**DON-120H**	**DON-220H**	**DON-820H**	**R4** = G ½ **N4** = ½“ NPT				
10 – 150	**DON-125H**	**DON-225H**	**DON-825H**	**R6** = G 1 **N6** = 1“ NPT **F6** = DIN- flange PN 40 (DN 25) **A6** = ANSI-flange 150 lbs (1“) **B6** = ANSI-flange 300 lbs (1“)				
15 – 250	**DON-130H**	**DON-230H**	**DON-830H**	**R8** = G 1½ **N8** = 1 ½“ NPT **F8** = DIN-flange PN40 (DN40) **A8** = ANSI-flange 150 lbs (1 ½“) **B8** = ANSI-flange 300 lbs (1 ½“)				
30 – 450	**DON-135H**	**DON-235H**	**DON-835H**	**R9** = G 2 **N9** = 2“ NPT **F9** = DIN-flange PN40 (DN50) **A9** = ANSI-flange 150 lbs (2“) **B9**[1)] = ANSI-flange 300 lbs (2“)				
50 – 580	**DON-140H**	**DON-240H**	**DON-840H**					
35 – 750	**DON-145H**	**DON-245H**	**DON-845H**	**RB** = G3 **NB** = 3“ NPT **FB** = DIN-flange PN 16 (DN80) **AB** = ANSI-flange 150 lbs (3“)				
50 – 1000	**DON-150H**	**DON-250H**	**DON-850H**					
75 – 1500	**DON-155H**	**DON-255H**	**DON-855H**	**RC** = G4 **NC** = 4“ NPT **FC** = DIN-flange PN16 (DN100) **AC** = ANSI-flange 150 lbs (4“)				
150 - 2500	**DON-160H**	**DON-260H**	**DON-860H**					

[1)] only for DON-x35 [2)] only for DON-x05 and DON-x10 3) only for options Ex/Zx

13. Dimensions Electronic Options Ex/Zx

Option -M/-N (standard)

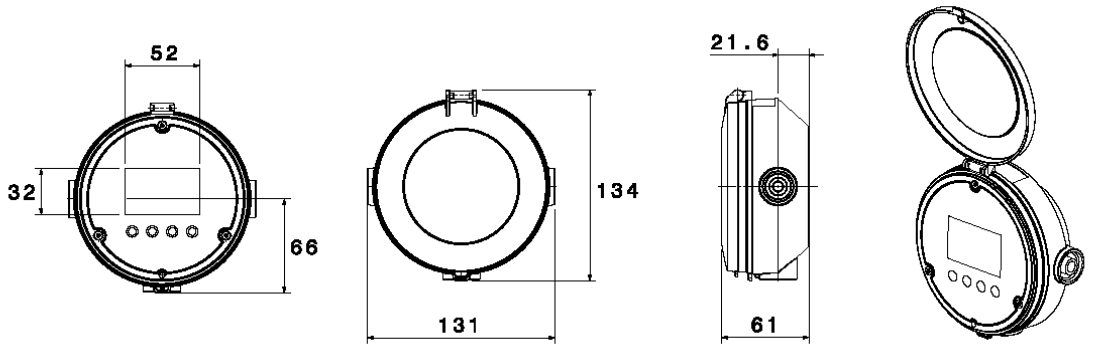

Option -S/-T (with cooling fin)

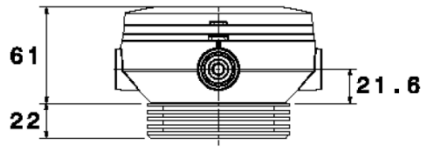

14. Troubleshooting

Oval gear flowmeters have two clearly distinct portions: one of which is mechanical, wetted areas with the oval gears surrounded by a housing, and the other is the electrical area, which includes the pulse output board.

Details of some key troubleshooting steps will now be provided. Please also refer to the instructions on troubleshooting errors contained on the following page.

Step 1 - Check application, installation and set-up.
Carefully read the section on mechanical installation to ensure full knowledge of all relevant installation and application factors which may affect the operation of the counter. These include pulsation, trapped air or selecting the wrong counter, including incorrect flow rate, temperature or pressure, or material incompatibility. Refer to the section on electrical installation to ensure correct cabling.

Step 2 - Check for blockages.
For new and modified systems in particular, the most frequent cause of error or sub-optimal counter operation is internal system or counter blockages due to foreign particles, such as beads of condensate, sealing tape residues or mixtures of deposits, rust, etc.

Step 3 - Guarantee flow rate.
Flow stopping or a flow rate declining below the usual limit may be attributable to a blocked screen, flowmeter rotors which are stuck or damaged, a defective pump, closed valves or an insufficient liquid level in the storage tank.

Step 4 - The oval gears in the counter must revolve.
This rotation is audible: try holding a screwdriver blade against the counter housing and push the handle right against your earlobe. Test the counter as required with flow switched on and off, to ensure you are familiar with the audible sound of rotation.

Step 5 - Ensure that pulses are generated when liquids flow.
Here, a multimeter is often not fast enough to capture the pulse sequence of the reed switch or the Hall Effect sensor. However, an oscilloscope will allow you to observe the output pulse sequence. When testing the reed switch pulse, a pull-up resistor must be installed between the single connection of the reed switch and the supply voltage, while the other connection must be connected to the reference potential of the measurement device (oscilloscope) (see electrical installation).

Step 6 - Confirm device operation.
If a mounted electronic component is connected to the DON, check the functions by simulating a pulse input. A reed switch pulse input can be simulated by a swift and pulse-driven short-circuiting of the input terminals.

Problem	Possible cause	Solution
Counter values too high	1. Disruption of the output signal	1. Ground shielding of the signal cable
		2. Re-lay the cable away from sources of high current
	2. Air or gas pockets	1. Eliminate the source of the air or gas pocket
		2. Install an upstream air separator
	3. Pulsating flow from the piston pump	1. Increase back-pressure to the pump
		2. Install a quick-response one-way check valve
		3. Install a pulsation damper between the pump and the counter
		4. Recalibrate the counter on site, to compensate for pulsations
		5. Replace the pump type for a pump allowing smooth supply
Counter values are too low	1. Damaged or worn rotors	1. Check, repair, clear or replace rotors
	2. Damaged or worn measurement chamber	1. Check measurement chamber for damage - repair as required
		2. Check concentricity of the rotor shafts in the chamber
	3. Disruption of the output signal	1. Ground shielding of the signal cable
		2. Re-lay the cable away from sources of high current
		3. Check all electrical connections and wires for the presence of current.
No output from counter	1. Soiled rotors	1. Check whether the rounded teeth at the base of the chamber are visible
		2. Check for any obstructing foreign particles
		3. Clear, repair or replace rotors
	2. Counter incorrectly mounted	1. See instructions for re-mounting the counter, focusing on the positioning of rotors and magnets above all
	3. No output from the output board	1. Check screw terminal connections and soldering joints
		2. Ensure the presence of DC voltage at +Vs and 0V/GND and that the analytical electronics connected include a pull-up resistor when using the reed switch
		3. Replace output plate
No flow signals indicated on the analytical device	1. Defective analytical electronics	1. Check settings and parameter data in the set-up menu
		2. Check screw terminal connections and the presence of electrical current
		3. Repair/replace analytical electronics

15. ATEX Exd version (electronic options RE / BE / HE / DE / GE / LE)

Products which were ordered with the optional encapsulated pressure-proof connector housing (Exd) are marked with an ATEX label (see figure). The label includes details relating to explosion group and temperature class. Before installing and operating the device, the label should be checked to ensure it contains all the required details.
The relevant explosion groups and temperature classes are as follows:

Ex I: Devices for use in mining with mine gas accumulation. Mine gas refers to the methane gas naturally generated from coal and coal seams in the coal mining industry. **Only stainless steel devices** are suitable for use in explosion group I (in accordance with IEC 60079-0, section 8.1.1). Aluminum devices are not permitted for explosion group I. If the flowmeter includes the label for group I, the surface temperature of the process fluid must not exceed 150 °C.

Ex IIC T4/T6: Devices for use in areas with potentially explosive atmospheres outside the mining field, but with mine gas accumulation. Either aluminum or stainless steel devices may be used in explosion group II. For T4 temperature class applications, the surface temperature of the process fluid must not exceed 120 °C, and for T6 temperature class applications, the surface temperature of the process fluid must not exceed 70 °C.

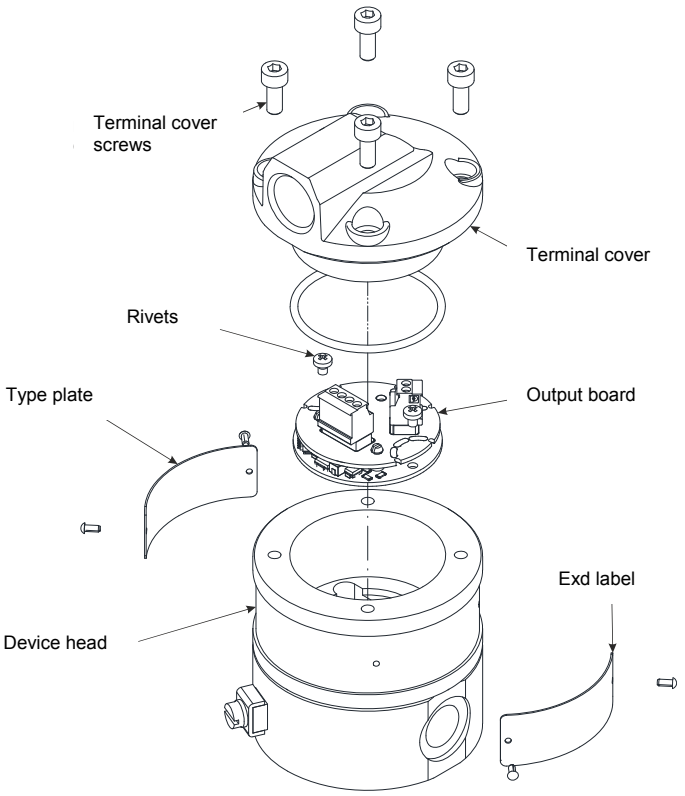

Operating instructions:

The Exd device must be removed from the explosive zone before the terminal cover can be opened.

The maximum permissible annular gap between the terminal cover and the measuring device must not exceed 0.15 mm. If the annular gap exceeds 0.15 mm due to corrosion or wear and tear, the worn out parts must be replaced.

The product does not meet the requirements of the Exd protection class unless the terminal cover is completely snapped into place and screwed down. No other screw sizes or lengths may be used than the ones of the original screws.

Each DON volume counter has been calibrated to function with mineral oil, which means the remainder of the calibration oil still remains in the device.
The oil used
for measurement ranges X05 to X15: SHELL Morlina 10
for measurement ranges X20 to X: EXXSOL D120

16. Declaration of Conformance

We, KOBOLD Messring GmbH, Hofheim-Ts, Germany, declare under our sole responsibility that the product:

Oval Gear Flow Meter **Model: DON-...**

to which this declaration relates is in conformity with the standards noted below:

EN 13463-1: 2009
Non electrical equipment for use in potentially explosive atmospheres:
(Applicable to mechanical display models and the mechanical 'wetted' section of electronic models)

All devices with electronic are in conformance with:

2002/96/EC Waste Electrical & Electronic Equipment (WEEE)

2004/108/EC Electro Magnetic Compatibility Directive

EN 61326-1:2013 Electrical equipment for measurement, control and laboratory use - EMC requirements – Part 1: General requirements

All sizes of X05 to X60 in Ex d version agree with the following certifications and directives:

LOM15ATEX2005
ATEX Equipment Certificate – Flameproof
Issued by LOM – Spain

94/9/EG
ATEX Directive
Notified body 0158 BVS (DEKRA EXAM, Bochum)

EN 60079-0: 2012
Explosive atmospheres - Part 0: Equipment – General requirements

EN 60079-1: 2007
Explosive atmospheres - Part 1: Equipment protection by flameproof enclosures "d"

The technical requirements of these standards are in accordance with the requirements of the harmonized standards EN 60079-0:2012 and EN 60079-1:2007, where no differences appeared that would affect the latest technical standards of our products subscribed to this declaration.

Hofheim, 30 July 2015

H. Peters
General Manager

M. Wenzel
Proxy Holder

17. Manufacturers declaration – Switches for use in Explosive Atmospheres

Background

a) Simple apparatus such as Mechanical contact switches, Reed switches, Thermocouples, Resistive sensors & LED's may be employed in a hazardous area without certification provided that the device does not generate or store more than 1.2 V, 0.1 A, 20 µJ and 25 mW. This IEC definition is also now used in the USA & Canada.

b) The surface temperature of simple apparatus under normal or fault conditions must not exceed the ignition temperature of the gas, subject to the following very valuable exception.

c) Because the ability of hot surfaces to cause ignition depends on their size, simple apparatus having a surface area between 20 mm² and 100 mm² will be classified T4 when the matched output power of the interface device does not exceed:

1.3W into 40 ºC ambient
1.2W into 60 ºC ambient
1.0W into 80 ºC ambient

The 1.3 W / 40 ºC element of this European dispensation is now accepted in the USA and Canada. Switches (mechanical & reed switches) and junction boxes dissipate no power and are normally classifies T6 (85 ºC).

These simple apparatus can be installed freely in I.S. circuits, no certification is required.

Reed switch Thermocouples Resistive sensors LED

Declaration

We, Kobold Messring GmbH, hereby declare that the reed contacts installed in the H0 and R0 DON electronics options come within the scope of "Simple Apparatus" pursuant to European, American and Canadian guidelines, although no special labelling is included to this effect.

Hofheim, 26. March 2015

H. Peters
General Manager

M. Wenzel
Proxy Holder

18. Exd Certificate

LABORATORIO OFICIAL J. M. MADARIAGA

(1) **EC-TYPE EXAMINATION CERTIFICATE**

(2) Equipment or protective system intended for use in potentially explosive atmospheres
Directive 94/9/EC

(3) EC-Type Examination Certificate nr. **LOM 15ATEX2005**

(4) Equipment or protection system — Gear wheel flow meters
Types DON-…E…

(5) Manufacturer — Kobold Messring GmbH

(6) Address — Nordring 22-24
D-65719 Hofheim
GERMANY

(7) This equipment or protective system and any acceptable variation thereto is specified in the schedule to this certificate and the documents therein referred to.

(8) Laboratorio Oficial J.M. Madariaga (LOM), notified body number 0163 in accordance with Article 9 of the Directive 94/9/EC of the European Parliament of 23 March 1994, certifies that this equipment or protective system has been found to comply with the Essential Health and Safety Requirements relating to the design and construction of equipment and protective systems intended for use in potentially explosive atmospheres, given in Annex II to the Directive.
The examination and test results are recorded in confidential report nr. **LOM 14.047 HP**

(9) Compliance with the Essential Health and Safety Requirements has been assured by compliance with:

- Standards — EN 60079-0:2012 — EN 60079-1:2007

(10) If the sign X is placed after the certificate number, it indicates that the equipment or protective system is subject to special conditions for safe use specified in the schedule to this certificate.

(11) This EC-Type Examination Certificate relates only to the design and construction of this specified equipment or protective system in accordance with the Directive 94/9/EC. Further requirements of the Directive apply to the manufacture and supply of this equipment or protective system. These are not covered by this certificate.

(12) The marking of the equipment or protective system shall include the following:

Ex II 2G Ex d IIC T4..T6 Gb
I M2 Ex d I Mb

Getafe, 2015-01-30

Carlos Fernández Ramón
Head of Certification Committee

This Certificate is a translation from the original in Spanish. The LOM liability applies only on the Spanish text

(This document may only be reproduced in its entirety and without any change) Page 1/3

RCPCER 07.3/2 Rev. 1

UNIVERSIDAD POLITÉCNICA DE MADRID
ENSAYOS E INVESTIGACIONES DE MATERIALES Y EQUIPOS PARA ATMÓSFERAS EXPLOSIVAS Y MINERÍA
(Real Decreto 334/1992 de 3 de Abril - BOE 1992-04-29)

Eric Kandel, 1 – 28906 GETAFE (MADRID) • (34) 91 4421366 • (34) 91 4419933 • lom@lom.upm.es

LABORATORIO OFICIAL J. M. MADARIAGA

(A1) SCHEDULE

(A2) EC-Type Examination Certificate nr: **LOM 15ATEX2005**

(A3) Description of equipment or protective system

Series of positive displacement gear wheel flow meters. Consist of a system formed by a pair of oval gears rotating through the action of fluid to be measured; the gear movement is detected as pulses generated by a permanent magnet embedded therein. Magnetic pulse detection, measurement and transformation of signals is performed inside a flameproof enclosure, also containing connection means.

These flowmeters can be made from aluminium or stainless steel. Those for group I only made of stainless steel.

Codification

DON-_ _ _ _ _E _ _

- Generic reference
- Housing material
- Measuring range
- Connection type/size
- O-ring material
- Electronics:
- E = Ex d
- Cable entry
- Options

Electric characteristics Umax: 30 V Imax: 200 mA

Process and ambient temperature

Group II		Group I (only stainless steel enclosures)
-20 °C ≤ Ta ≤ +70 °C	-20 °C ≤ Ta ≤ +120 °C	Maximum process temperature 150 °C
Ex d IIC T6 Gb	Ex d IIC T4 Gb	Ex d I Mb

(A4) Test report nr.: **LOM 14.047 HP**

(A5) Special conditions for safe use

None

(A6) Individual tests

Flameproof enclosures are exempt from individual tests because the prototypes had been submitted to overpressure test to four times the reference pressure.

RCPCER 07.3/2 Rev. 1 *(This document may only be reproduced in its entirety and without any change)* Page 2/3

LABORATORIO OFICIAL J. M. MADARIAGA

(A1) SCHEDULE

(A2) EC-Type Examination Certificate nr: **LOM 15ATEX2005**

(A7) Essential Health and Safety Requirements

Explosion safe requirements are covered by application of the standards indicated in the first page of this certificate.

(A8) Descriptive documents

		Rev.	Date
- Technical description		-	2015-02-09
- Drawings n°:	223.001	0	2012-09-12
	223.002	0	2012-09-12
	223.003	0	2012-09-11
	223.004	0	2012-09-11
	223.005	0	2012-09-11
	223.006	0	2012-09-11
	223.007	0	2012-09-10
	223.008	0	2012-09-10
	223.009	0	2012-09-07
	223.010	0	2012-09-27
	223.011	0	2012-09-18
	223.013	0	2012-08-21
	223.022	0	2012-09-11
	223.023	0	2012-09-11
	223.024	0	2012-09-12
	223.025	0	2012-09-10
	223.026	0	2012-09-12
	223.027	0	2012-09-13
	223.028	0	2012-09-13
	223.029	0	2012-09-13
	223.030	0	2012-09-13
	223.031	0	2012-09-17
	223.032	0	2012-09-18
	223.033	0	2012-09-13
	023.17Z	0	2012-08-13
	023.18Z	1	2013-11-12
	023.19Z	1	2013-11-12
	023.20Z	1	2013-11-12
	023.21Z	2	2014-01-10
	023.22Z	2	2014-01-10
	023.23Z	2	2014-01-10
	023.24Z	2	2014-01-10
	023.28Z	0	2013-08-02
	023.29Z	1	2013-10-22
	023.30Z	1	2013-10-22
	023.31Z	1	2013-10-22
	023.32Z	2	2014-01-10
	023.33Z	3	2014-01-10
	023.34Z	3	2014-01-10
	023.35Z	3	2014-01-10
	023.59Y	0	2012-09-06
	023.599	b	2013-09-04
	023.601	0	2013-10-10
	023.390	0	2014-12-02
	023.391	0	2014-12-02
	023.392	0	2014-01-22
	323.001	1	2014-04-15

19. State of safeness

State of safeness
KOBOLD Messring GmbH, D-65719 Hofheim

FO41903E
Rev. 02/15

Explanation for our customers:
In case of returning please take into account the following details and enclose this state of safeness

Address of the customer:

Contact person:

E-Mail-Address:

KOBOLD-Product:

KOBOLD- Order No.:

To be completed by customer

- **Description of defect:**

kind of medium:

trade name: supplier:

- **Operation conditions:**

temperature: _____°C

pressure: _____ bar

flow rate: _____

- **Statement of safeness**

We hereby certify that there are no noxious substances whatsoever (including detergents) in the instruments returned and that there is no hazard to employees handling the instruments.

_____
Stamp, date, signature

FO41903E State of safeness Rev. 02/15