BA01069F/09/EN/06.19
71462567
2019-12-24

Operating Instructions
Soliswitch FTE20

Point level switch

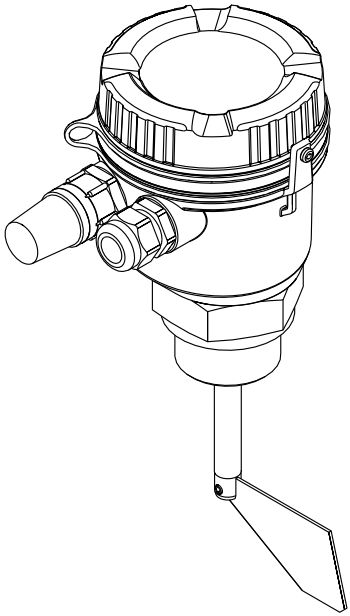

Endress+Hauser
People for Process Automation

Table of contents

1 Important document information

1.1 Document function

These Operating Instructions contain all the information that is required in various phases of the life cycle of the device: from product identification, incoming acceptance and storage, to mounting, connection, operation and commissioning through to troubleshooting, maintenance and disposal.

1.2 Document conventions

1.2.1 Safety symbols

⚠ DANGER
This symbol alerts you to a dangerous situation. Failure to avoid this situation will result in serious or fatal injury.

⚠ WARNING
This symbol alerts you to a dangerous situation. Failure to avoid this situation can result in serious or fatal injury.

⚠ CAUTION
This symbol alerts you to a dangerous situation. Failure to avoid this situation can result in minor or medium injury.

NOTICE
This symbol contains information on procedures and other facts which do not result in personal injury.

1.2.2 Electrical symbols

Symbol	Meaning
⎓	Direct current
∼	Alternating current
≂	Direct current and alternating current
⏚	**Ground connection** A grounded terminal which, as far as the operator is concerned, is grounded via a grounding system.
⏚	**Protective Earth (PE)** A terminal which must be connected to ground prior to establishing any other connections. The ground terminals are situated inside and outside the device: ▪ Inner ground terminal: Connects the protectiv earth to the mains supply. ▪ Outer ground terminal: Connects the device to the plant grounding system.

1.2.3 Symbols for certain types of information

Symbol	Meaning	Symbol	Meaning
	Permitted Procedures, processes or actions that are permitted.		**Preferred** Procedures, processes or actions that are preferred.
	Forbidden Procedures, processes or actions that are forbidden.		**Tip** Indicates additional information.
	Reference to documentation		Reference to page
	Reference to graphic	1., 2., 3....	Series of steps
	Result of a step		Visual inspection

1.2.4 Symbols in graphics

Symbol	Meaning
1, 2, 3 ...	Item numbers
1., 2., 3. ...	Series of steps
A, B, C, ...	Views
A-A, B-B, C-C, ...	Sections
	Hazardous area Indicates a hazardous area.
	Safe area (non-hazardous area) Indicates the non-hazardous area.

1.2.5 Tool symbols

Symbol	Meaning
A0011220	Flat blade screwdriver
A0011221	Allen key
A0011222	Open-ended wrench
A0013442	Torx screwdriver

2 Safety instructions

2.1 Requirements for the personnel

The personnel for installation, commissioning, diagnostics and maintenance must fulfill the following requirements:
- ▶ Trained, qualified specialists must have a relevant qualification for this specific function and task.
- ▶ Are authorized by the plant owner/operator.
- ▶ Are familiar with federal/national regulations.
- ▶ Before starting work, read and understand the instructions in the manual and supplementary documentation as well as the certificates (depending on the application).
- ▶ Follow instructions and comply with basic conditions.

The operating personnel must fulfill the following requirements:
- ▶ Are instructed and authorized according to the requirements of the task by the facility's owner-operator.
- ▶ Follow the instructions in this manual.

2.2 Designated use

The Soliswitch FTE20 must only be used as a point level switch for specific bulk solids (see Technical Data → 🗎 24).

- The device may only be operated when installed.
- The manufacturer accepts no liability for damages resulting from incorrect use or use other than that designated. It is not permitted to convert or modify the device in any way.

2.3 Workplace safety

For work on and with the device:
- ▶ Wear the required personal protective equipment according to federal/national regulations.

If working on and with the device with wet hands:
- ▶ Due to the increased risk of electric shock, gloves must be worn.

2.4 Operational safety

Risk of injury!
- ▶ Operate the device only if it is in proper technical condition, free from errors and faults.
- ▶ The operator is responsible for interference-free operation of the device.

Modifications to the device

Unauthorized modifications to the device are not permitted and can lead to unforeseeable dangers:
- ▶ If modifications are nevertheless required, consult with Endress+Hauser.

3 Identification

3.1 Nameplate

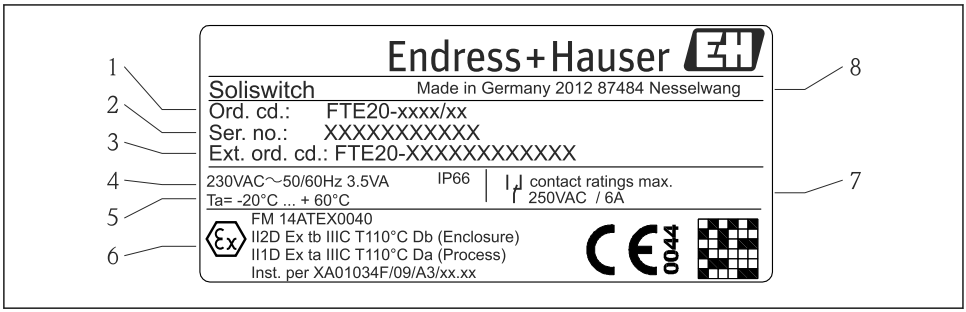

1 Nameplate of the Soliswitch FTE20 (example)

1 *Order code*
2 *Serial number*
3 *Extended order code*
4 *Power supply and IP protection of the housing*
5 *Ambient temperature range*
6 *Approvals*
7 *Output values*
8 *Year of manufacture, manufacturer's address*

3.2 Name and address of manufacturer

Name of manufacturer:	Endress+Hauser Wetzer GmbH + Co. KG
Address of manufacturer:	Obere Wank 1, D-87484 Nesselwang or www.endress.com

4 Installation

4.1 Incoming acceptance, transport, storage

Compliance with the permitted environmental and storage conditions is mandatory. Precise specifications are provided in the "Technical data" section → 20.

4.1.1 Incoming acceptance

On receipt of the goods, check the following points:
- Is the packaging or the content damaged?
- Is the delivery complete? Compare the scope of delivery against the information on your order form.

4.1.2 Transport and storage

Please note the following:
- Pack the device so that is protected against impact for storage and transport. The original packaging provides optimum protection.
- The permitted storage temperature is −20 to 60 °C (−4 to 140 °F).

4.2 Installation conditions

Correct and incorrect installation positions are indicated in → 2, 8.

The device must be protected against direct sunshine. A weather protection cover is available as an accessory, see the "Accessories" section → 28.

The dimensions of the device are provided in the "Technical data" section → 16, 25.

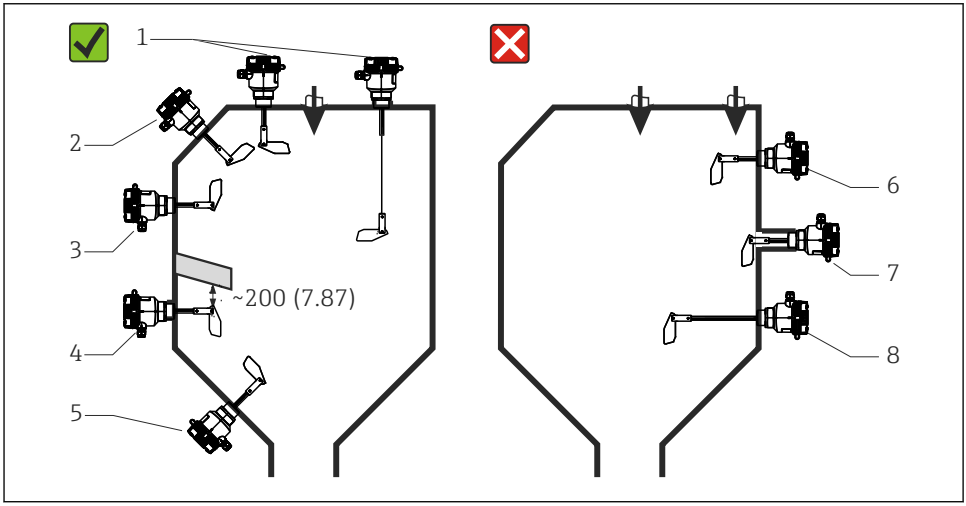

2 *Orientations of the point level switch, dimensions in mm (in)*

Permitted orientations		Forbidden orientations	
1:	Vertical from the top	6:	In direction of solids flow
2:	Angled from the top	7:	Installation coupling too long
3:	From the side	8:	Horizontal with shaft length >300 mm (11.8 in)
4:	From the side with protective cover against falling solids		
5:	From the bottom (device must be protected against shock-type loads)		

Ambient temperature range
−20 to 60 °C (−4 to 140 °F)

Medium temperature range
−20 to 80 °C (−4 to 176 °F)

Mechanical load of optional indicator light
The optional indicator light must be protected against mechanical load (impact energy > 1 J).

More information is provided in the "Technical data" section → 📄 23.

4.3 Installation instructions

NOTICE

The device can be damaged if handled incorrectly during installation

- Do not turn the housing to tighten the process connection. Once the process connection has been tightened, the housing can be aligned so that the cable entries point downwards.

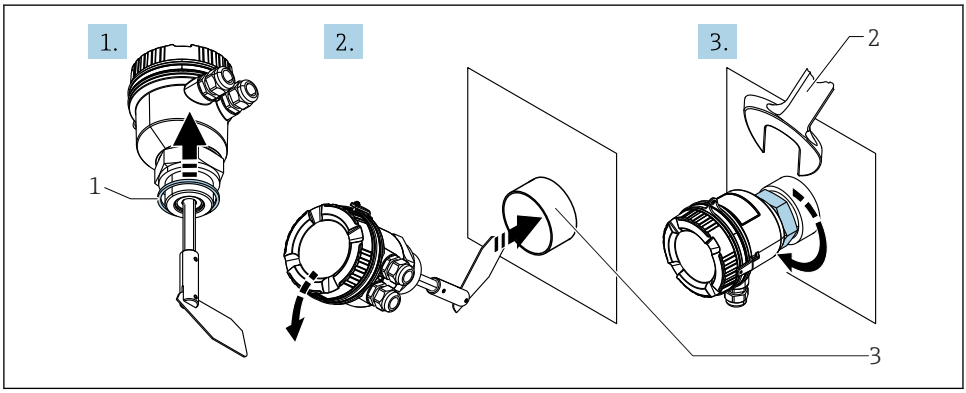

3 Installation of the standard version

1 *Sealing ring 60x48x3 mm (2.36x1.89x0.12 in.)*
2 *Open-ended wrench AF 60*
3 *Max. flange thickness with standard rotating paddle 40 mm (1.57 in). Use the hinged rotating paddle for thicker flanges.*

NOTICE

The device with hinged rotating paddle does not function correctly when the transport lock is secured.

- Remove the transport lock (plastic net around the rotating paddle) prior to installation.

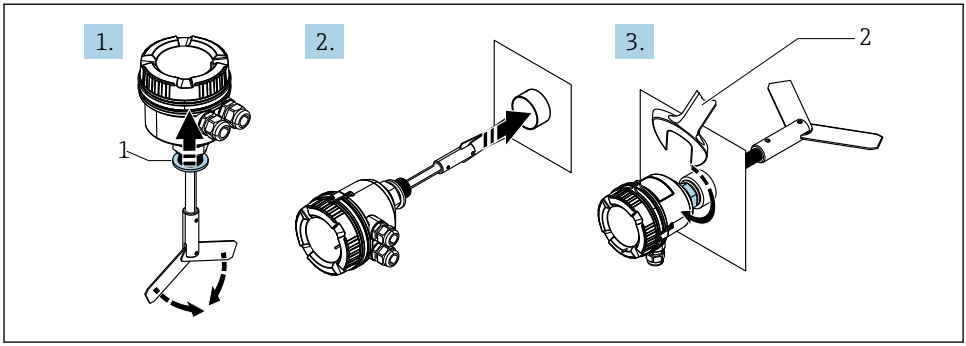

A0017363

4 Installation of the version with the hinged rotating paddle

1 Sealing ring
2 Open-ended wrench AF 60

4.3.1 Turning the housing to the right position

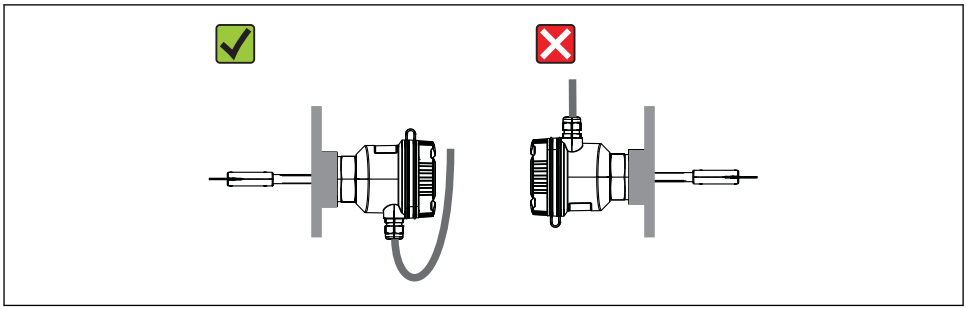

A0017364

5 Correct housing position

4.3.2 Installation of the flange version

The flange version is available as an accessory. The dimensions are provided in the "Technical data" section → 29.

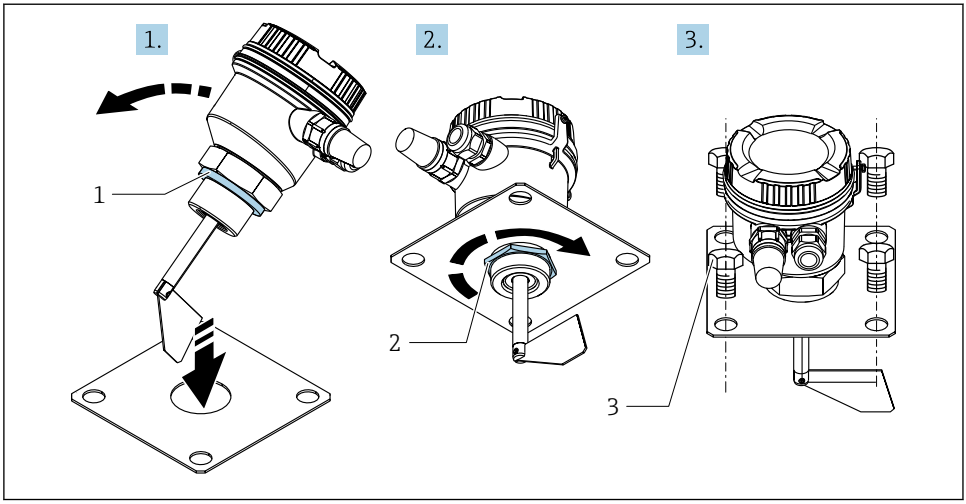

6 Installation of the flange version

1 Process seal
2 Nut
3 Screws (not included in the delivery)

4.3.3 Mounting the weather protection cover

The weather protection cover is available as an accessory and can be installed without disassembling the point level switch. The dimensions are provided in the "Technical data" section → 19, 29.

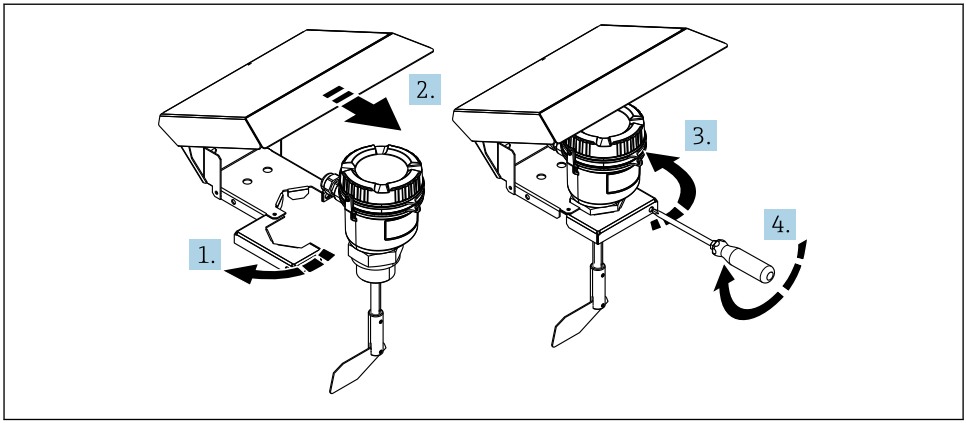

A0017698

7 *Mounting the weather protection cover*

To protect the device from sunlight, arrange the weather protection cover in such a way that provides optimum shade for the device.

4.3.4 Installation in hazardous areas

When installing the point level switch in a hazardous area, the securing screw must be tightened to prevent the cover from opening.

Additional installation instructions for the hazardous area are provided in the separate Ex documentation for the device (optional).

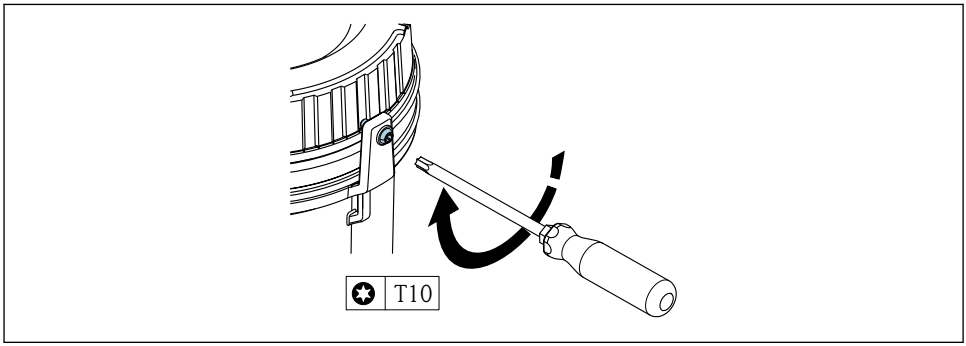

A0017368

8 *Tightening the cover securing screw. This is a combined screw; a flat-blade screwdriver can be used as an alternative to a T10 Torx screwdriver.*

4.4 Post-installation check

- Are the seals undamaged?
- Is the process connection securely tightened?
- Do the cable entries point downwards and are they tightened?
- Is the cover securely closed and the securing screw securely tightened?

5 Wiring

5.1 Connection instructions

WARNING

Danger! Electric voltage!

▶ The entire connection of the device must take place while the device is de-energized.

CAUTION

Pay attention to additional information provided

▶ The protective ground conductor must be connected before any other connection is established.
▶ Before commissioning the device, make sure that the supply voltage matches the voltage specifications on the nameplate.
▶ Provide a suitable switch or power-circuit breaker in the building installation. This switch must be provided close to the device (within easy reach) and marked as a circuit breaker.
▶ An overload protection element (rated current ≤ 10 A) is required for the power cable.

NOTICE

High temperatures can damage the cables and the device

▶ Use cables that are suitable for temperatures 10 °C (18 °F) above the ambient temperature.

NOTICE

IP66 protection is not provided if the protection caps supplied are used for the cable entries

▶ The protection caps supplied are designed to protect against contamination during transport and storage. Use a suitable dummy plug to seal any cable entry that is not used during operation.

If replacing an older Soliswitch FTE3x with a new FTE20-type device, note that the free ends of the cable to the terminal are longer than in the older version (approx. 5 to 6 cm (1.97 to 2.36 in)).

5.2 Quick wiring guide

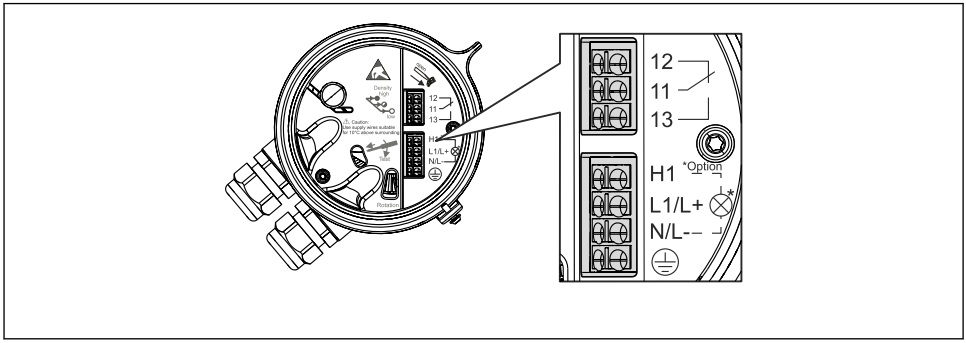

A0017295

9 Terminal assignment of the point level switch

Symbol	Description	Symbol	Description
⏚	Protective ground	H1	Connection for signaling empty/full status detection (optional)
N (AC), L- (DC)	Power connection	N/L-	
		11	Changeover contact
L1 (AC), L+ (DC)	Power connection	12	Normally closed contact
		13	Normally open contact

5.2.1 Switching states

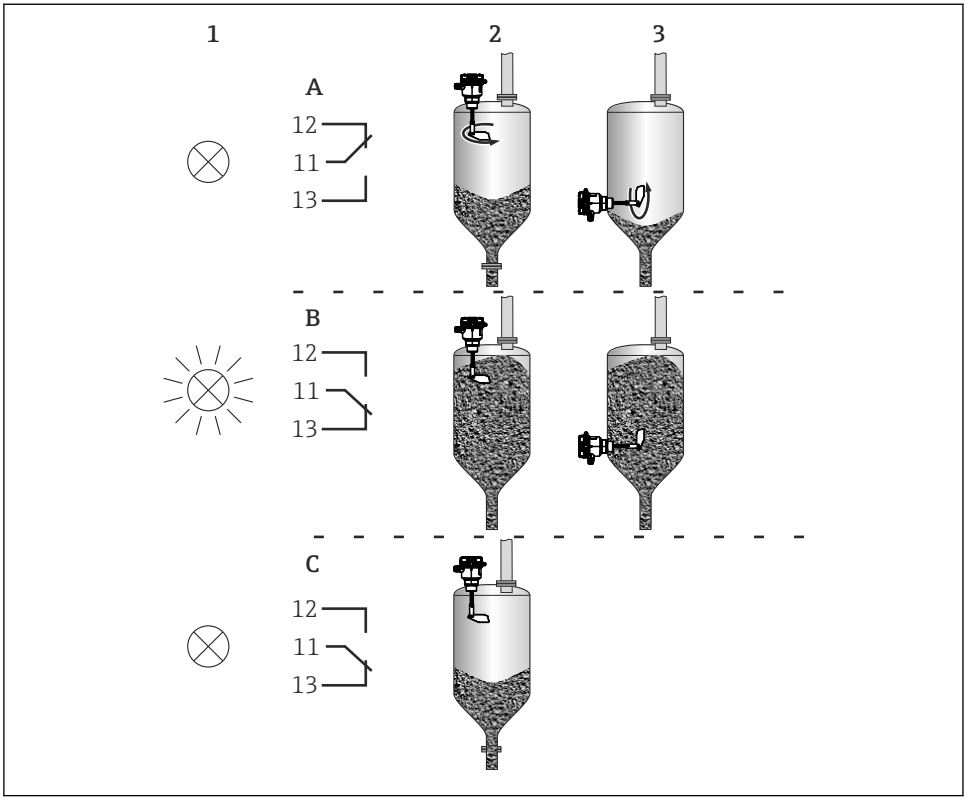

A0017628

	1 = Indicator light (optional, non-Ex only)	2 = Full signaling	3 = Refill signalling	Shaft rotation	Internal light
A	OFF	OFF	ON	YES	ON
B	ON	ON	OFF	NO	ON
C (only with optional rotation monitoring)	OFF	ON	OFF	NO	Flashes

5.2.2 Inserting the cable

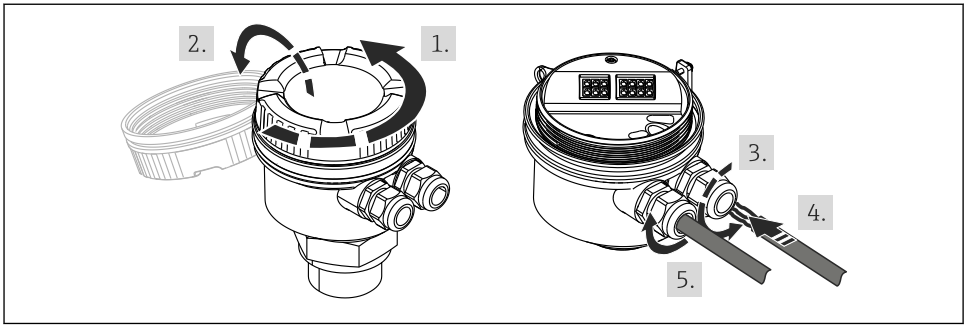

A0017367

10 Removing the housing cover and inserting the cables

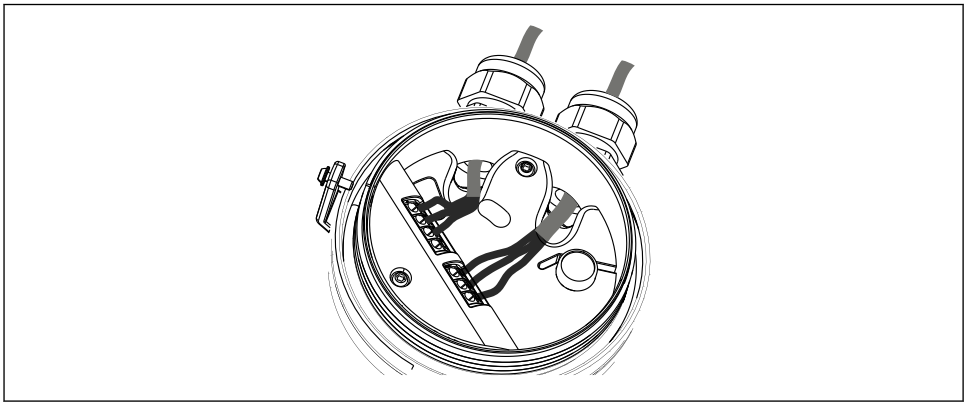

A0017366

11 Connecting the cable to the terminals

5.3 Post-connection check

Device condition and specifications	Notes
Are cables or the device damaged?	Visual inspection
Electrical connection	**Notes**
Does the supply voltage match the specifications on the nameplate?	→ 1, 7 ▪ 20 to 28 V DC ▪ 24 V AC ▪ 115 V AC ▪ 230 V AC

Are the mounted cables connected correctly and strain-relieved?	-
Are the cable glands securely tightened?	The dust protection plugs which are delivered with the device are only for protection during transport and storage. Close unused cable entry with a blind plug (IP65) when commissioning the device.

6 Operation

WARNING

The device is not explosion-protected if the housing is open.

- The device may only be opened in the hazardous area if no supply voltage is applied. Therefore the device may only be operated in a de-energized state or outside the hazardous area.

6.1 Setting the switching threshold (sensitivity)

The switching threshold can be set in 3 stages via an operating element that is accessible from above. The threshold can also be set during operation (in the non-hazardous area):

- Minimum: 80 g/l (4.99 lb/ft^3)
- Adjustable in 3 stages depending on the density of the bulk solids: low, medium (factory default), high

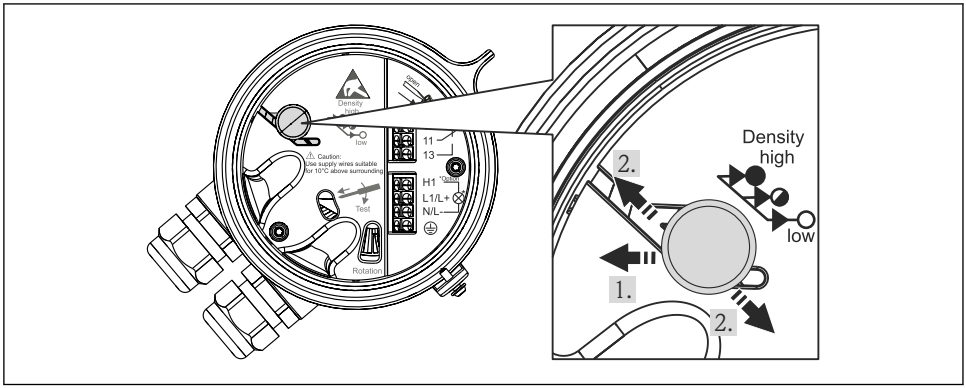

A0017352

12 *Setting the switching threshold*

Setting the switching pressure

1. Move the operating element counterclockwise as illustrated in the graphic.
2. Move the operating element to the desired position and let it click into place.

6.2 Rotational movement display

The shaft's rotational movement is indicated by a ratchet disk fitted on the drive axle of the paddle. The viewing area is lit up by an LED to make it easier to see. The rotational movement of the disk, and therefore also the shaft, can be checked through an inspection opening in the cover of the internal compartment when the cover is closed.

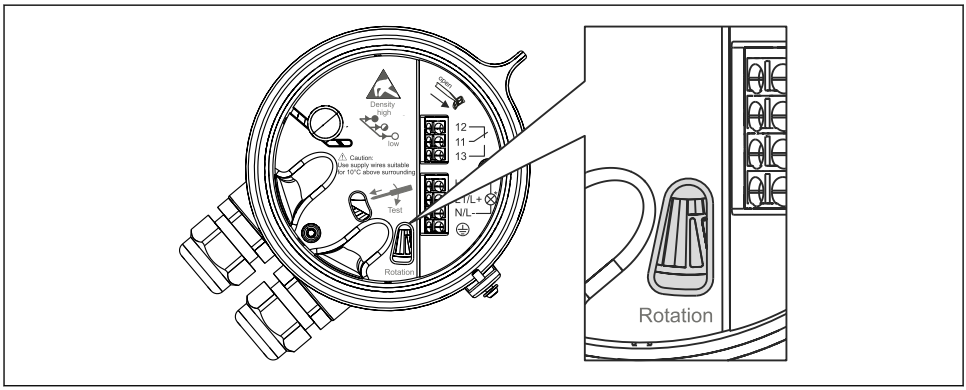

A0017353

13 Inspection glass to observe rotational movement

6.3 Indicator light (optional)

The point level switch is optionally fitted with an indicator light that lights up when the rotating paddle stops.

6.4 Testing the internal switch

When the housing cover is open, the function of the internal switch to switch off the motor can be checked by inserting a screwdriver into the opening provided in the electronics cover and by moving the handle in the direction of the arrow.

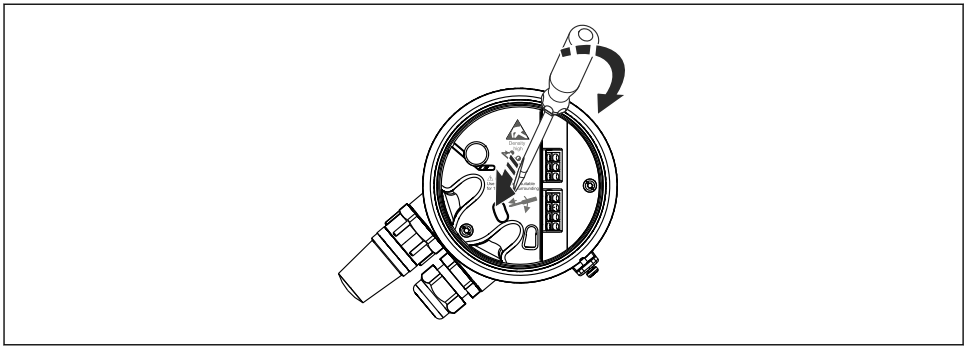

A0017369

14 Testing the internal switch

7 Commissioning

7.1 Post-installation and post-connection check

Checklists:
- Post-installation check → 📄 13
- Post-connection check→ 📄 16

7.2 Setting the switching pressure (sensitivity)

The switching threshold can be adapted to the weight of the bulk solids in 3 stages via an operating element that is accessible from above (also possible during operation):
- Minimum: 80 g/l (4.99 lb/ft³)
- Adjustable in 3 stages depending on the density of the bulk solids: low, medium (factory default), high

7.3 Switching on the device

The shaft starts to turn as soon as the supply voltage is switched on. The rotational movement can be observed from the outside.

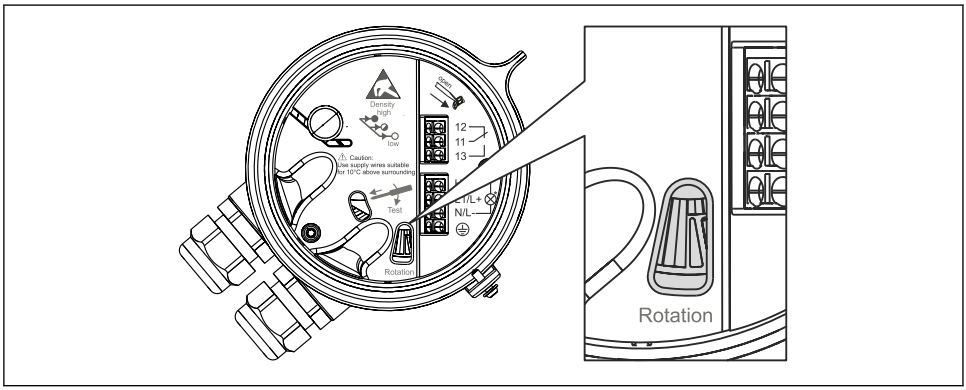

A0017353

15 Window to observe rotational movement

8 Troubleshooting

Functional testing of the point level switch by testing the internal switch → 15, 📄 18

8.1 Point level switch with rotation monitoring

The table below shows the output signal of the point level switch with rotation monitoring for overfill protection.

Rotation monitoring of the point level switch (optional)

	Power supply	Motor	Output signal of "full" sensor	Internal light
Normal operation	On	Shaft turns	-	On
	On	Shaft does not turn, rotating paddle is covered	Full	On
Event of fault	On	Shaft does not turn, rotating paddle is not covered	Full	Flashes
	Off		Full	Off

If the rotation monitoring system detects an error, a "full" alarm is signaled and the light in the electronics housing flashes.

Function testing of the point level switch

Operate the internal switch

1. Insert a screwdriver or another suitable tool in the opening provided in the electronics cover and move it in the direction indicated, see testing the internal switch
   → 14, 18.
   ↳ The switch is operated and the empty/full alarm is reset.
2. Wait for the error detection time to elapse (approx. 25 s).
   ↳ If no rotational movement is detected during the error detection time, the device signals the full or empty alarm again and the light in the electronics housing flashes.

9 Technical data

9.1 Input

9.1.1 Measured variable

Level (in line with the orientation and length)

9.1.2 Measuring range

The measuring range depends on the installation location of the device and the selected length of the shaft 75 to 300 mm (2.95 to 11.81 in) or the rope extension up to max. 2 000 mm (6.56 ft).

9.2 Output

9.2.1 Output signal

Binary

9.2.2 Switch output

Function

Switch a floating changeover contact.

Switching behavior

On/off

Switching time

From paddle standstill until output of the switch signal: 20°, corresponds to 3.5 s

Switching capacity

- According to EN 61058: 250 V AC 5E4, 6(2) A
- According to UL 1054: 125 to 250 V AC, 5 A
- 24 V DC, 3 A
- Min. switching load 300 mW (5 V/5 mA)

After a current >100 mA is actuated, it is no longer possible to guarantee the switching function with a switching current I <100 mA.

9.3 Power supply

9.3.1 Terminal assignment

Symbol	Description	Symbol	Description
⏚	Protective ground	H1	Connection for signaling empty/full status detection (optional)
N (AC), L- (DC)	Power connection	N/L-	
		11	Changeover contact
L1 (AC), L+ (DC)	Power connection	12	Normally closed contact
		13	Normally open contact

9.3.2 Supply voltage

- 20 to 28 V DC
- 24 V AC 50/60 Hz
- 115 V AC 50/60 Hz
- 230 V AC 50/60 Hz

An overload protection element (rated current ≤ 10 A) is required for the power cable.

9.3.3 Power consumption

Max. 3.5 VA

9.3.4 Terminals

Terminals with spring terminal design

Permitted cable cross-sections

Rigid	0.2 to 2.5 mm² (24 to 14 AWG)
Flexible	0.2 to 2.5 mm² (24 to 14 AWG)
Flexible with wire end ferrule without plastic ferrule	0.5 to 2.5 mm² (22 to 14 AWG)
Flexible with wire end ferrule with plastic ferrule	0.5 to 1.5 mm² (22 to 16 AWG)
AWG as per UL/CUL/kcmil	

Use supply wires suitable for 10 °C (18 °F) above surrounding.

9.4 Performance characteristics

9.4.1 Shaft speed

1 min^{-1}

9.4.2 Sensitivity

Can be adjusted using an operating element accessible from the top → 27.

- Minimum: 80 g/l (4.99 lb/ft³)
- Depending on the density of the bulk solids adjustable in three stages: low, medium (default), high

9.4.3 Mechanical operating life

500 000 switching operations

9.5 Installation

9.5.1 Mounting location

Installation position → 2, 8

Permitted	Not permitted	Comments
Vertical from the top		
Angled from the top		Cable entry must point downwards
From the side		Cable entry must point downwards; with protective cover against falling solids depending on the installation position

Permitted	Not permitted	Comments
From the bottom (device must be protected against shock-type loads)		Cable entry must point downwards
	In direction of solids flow	
	Installation socket too long	
	Horizontal with shaft length >300 mm (11.8 in)	

9.5.2 Special mounting instructions

Side load on the shaft
Max. 60 N

Load on the rope
Max. 1 500 N

Operating pressure (abs.)
0.5 to 2.5 bar (7.25 to 36.3 psi)

Housing can be rotated 360 °
To adjust to the direction of the cable entries (pointing downwards)

Cable entries
The dust protection plugs which are delivered with the device are only for protection during transport and storage. Close unused cable entry with a blind plug (IP65) when commissioning the device.

Mechanical load of optional signal lamp
The optional signal lamp must be protected against mechanical load (impact energy > 1 J).

9.6 Environment

The device must be protected against direct sunshine.

A weather protection cover is available as an accessory, see the "Accessories" section → 28.

All values not indicated as per DIN EN 6054-1.

9.6.1 Ambient temperature range

−20 to 60 °C (−4 to 140 °F)

9.6.2 Storage temperature

−20 to 60 °C (−4 to 140 °F)

9.6.3 Climate class

EN60654-1, Class C2

9.6.4 Degree of protection

IP66

9.6.5 Shock resistance

As per EN 60068-2-27: 30g

9.6.6 Vibration resistance

As per EN 60068-2-64: 0.01g^2/Hz

9.6.7 Electromagnetic compatibility

Electromagnetic compatibility in accordance with all the relevant requirements of the EN 61326 series. For details refer to the Declaration of Conformity.

- Interference immunity: as per IEC 61326-1, industrial environment
- Interference emission: as per IEC 61326-1, Class B

9.6.8 Electrical safety

Class I equipment, overvoltage category II, pollution degree 2

9.6.9 Altitude

< 2 000 m (6 560 ft) over MSL

9.7 Process

9.7.1 Medium temperature range

−20 to 80 °C (−4 to 176 °F)

9.7.2 Process pressure range

≤ 1.5 bar (21.8 psi) overpressure (e.g. when silo is filled)

9.7.3 Solids weight

≥ 80 g/l (4.99 lb/ft^3)

9.7.4 Grain size

≤ 50 mm (1.97 in)

9.8 Mechanical construction

9.8.1 Design, dimensions

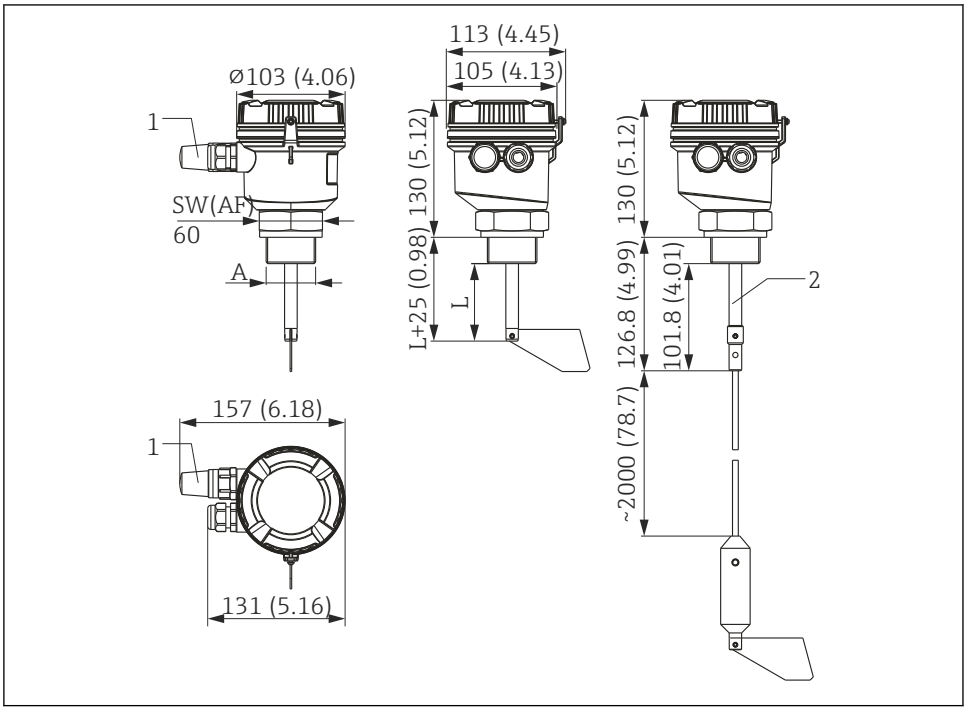

16 *Dimensions of the point level switch, dimensions in mm (in)*

1 *Indicator light (optional)*
2 *Version with rope extension, can be shortened*

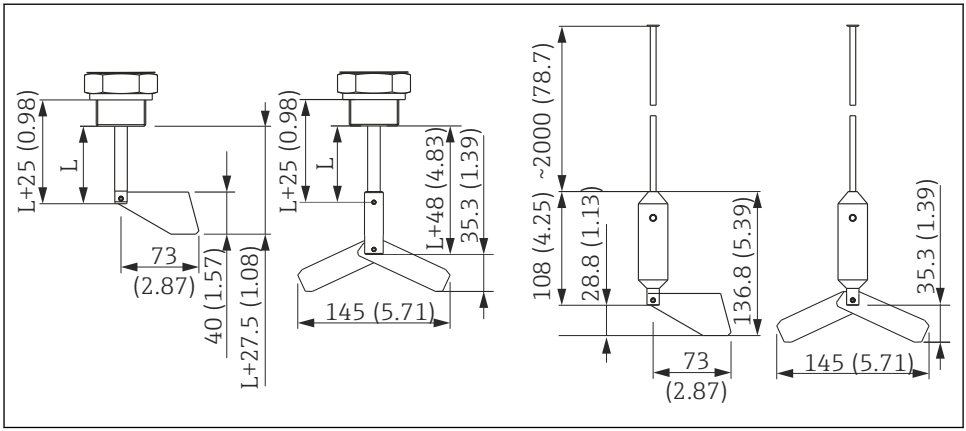

17 Dimensions of the rotating paddle - standard and hinged, for shaft and rope extension, dimensions in mm (in)

Dimensions depending on the version		
A	Process connection	NPT 1¼", NPT 1½", G 1½"
L	Length of shaft	75 to 300 mm (2.95 to 11.81 in)

9.8.2 Weight

Version / part	Weight (approx.)
with shaft 100 mm (3.94 in), plastic process connection	800 g (1.76 lb)
with shaft 100 mm (3.94 in), metal process connection	1 600 g (3.53 lb)
Hinged paddle	110 g (0.24 lb)
Rope extension	755 g (1.66 lb)

9.8.3 Materials

Designation	Material
Housing	Polycarbonate
Captive screw cap	Polyamide
Cover seal	Silicone
Housing / process connection seal	Viton
Process seal	Synthetic/organic fiber elastomer seal (asbestos-free) NPT versions do not have a process seal and the thread must be sealed by the customer onsite, e.g. using a Teflon tape.

Designation	Material
Shaft	1.4305 / 303
Rope extension	1.4401 / 316
Paddle (standard / hinged)	1.4301 / 304
Shaft seal	NBR
Process connections	Stainless steel 303 version or PBT version

9.8.4 Cable entries

2 x cable gland, M20 x1.5

(optionally 1 x cable gland M20 x 1.5 and indicator lamp)

Permitted cable diameter
5 to 9 mm (0.2 to 0.35 in)

9.9 Operability

9.9.1 Local operation

Rotational movement display

The shaft's rotational movement is indicated by a reflector disk fitted on drive shaft of the paddle and can be monitored through a sight opening in the drive/terminal cover. The disk's viewing area is lit up by an LED to make it easier to see.

If rotation monitoring (optional) detects an error, the LED flashes.

Setting the switching threshold (sensitivity)

The switching threshold can be adapted to the weight of the bulk solids in 3 stages via an operating element that is accessible from above (also possible during operation):
- Minimum: 80 g/l (4.99 lb/ft^3)
- Adjustable in 3 stages depending on the density of the bulk solids: low, medium (factory default), high

9.10 Certificates and approvals

9.10.1 CE mark

The product meets the requirements of the harmonized European standards. As such, it complies with the legal specifications of the EC directives. The manufacturer confirms successful testing of the product by affixing to it the CE-mark.

9.10.2 EAC mark

The product meets the legal requirements of the EEU guidelines. The manufacturer confirms the successful testing of the product by affixing the EAC mark.

9.10.3 Ex approval

Information about currently available Ex versions (ATEX, FM, CSA, etc.) can be supplied by your E+H Sales Center on request. All explosion protection data are given in a separate documentation which is available upon request.

9.10.4 Other standards and guidelines

The manufacturer confirms compliance with all the relevant external standards and guidelines.

9.11 Accessories

Various accessories, which can be ordered with the device or subsequently from Endress +Hauser, are available for the device. Detailed information on the order code in question is available from your local Endress+Hauser sales center or on the product page of the Endress +Hauser website: www.endress.com.

9.11.1 Device-specific accessories

Accessories	Description
Flanged version, incl. seal and nut for the process connection	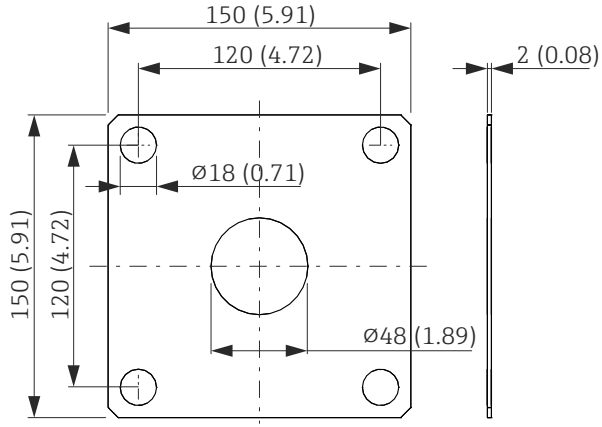 *18 Dimensions of the flange connection, dimensions in mm (in)* Order as an accessory in the product structure

Protective cover	Used to protect the measuring device from the adverse effect of the weather and sunlight when fitted in the roof of a silo. 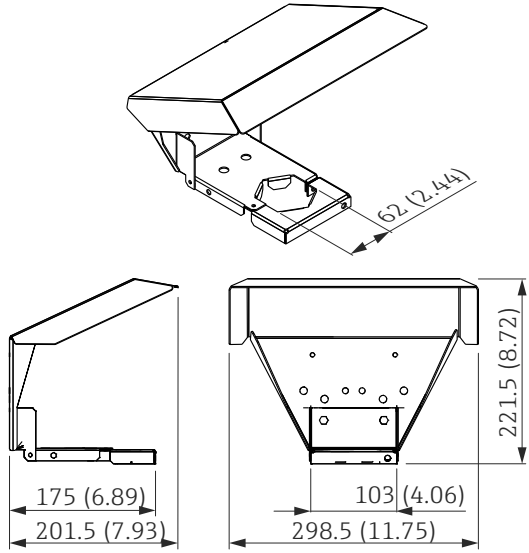 *19 Dimensions of the protective cover, dimensions in mm (in)* Order as an accessory in the product structure

www.addresses.endress.com

Endress+Hauser

People for Process Automation