USER'S MANUAL

PM305/310L/310H

PRESSURE CALIBRATOR

PC705

ScanSense
THE FIRST CHOICE

Thank you for purchasing our pressure meter.
This product is manufactured in accordance with our strict standards for quality in design, components, and workmanship to fulfill our vision:

"To be the leading company in high quality self-contained products"

Scan-Sense AS reserves the right to make improvements or alterations to their products without incurring any responsibility to make the same improvements or alterations to products previously sold.

All efforts have been made to ensure the accuracy of this handbook. We at Scan-Sense AS are always striving to improve our products and handbooks, therefore we would greatly appreciate being informed of any errors found in our product or its handbook. The above notwithstanding, Scan-Sense AS can assume no responsibility for any errors in this handbook or the consequences.

⚠ Symbol used to identify an action that can cause personal injury or damage to equipment.

⚠ Always release internal pressure at connectors **before** disconnecting.

Uncontrolled release of high pressure can result in personal injury and damage to equipment.

Scan-Sense AS
Bekkeveien 163
N-3173 Vear,
Norway

Phone: + 47 33 36 30 00
Fax: + 47 33 36 30 01
Email: post@scansense.no
www.scansense.no

Document prepared by B&C ENTERPRISES AS, Kongsberg, Norway

Table Of Contents

1 DESCRIPTION OF THE PM305 AND PC705

The PM305 and PC705 Pressure Calibrator series are designed as self-contained, portable pressure meters that have been calibrated to precision pressure equipment traceable to national standards.

Each unit is marked with:

- Certificate Number
- Safety code and gas group
- Calibration certificate
- Serial number
- Production year
- Pressure range.

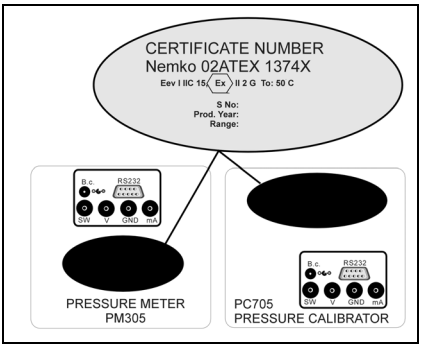

1.1 CALIBRATION LABEL

Scan-Sense AS certifies that this product meets published specifications at the time of shipment from the factory. Scan-Sense AS further certifies that its calibration measurements are traceable to accredited international standards. Each pressure calibrator has a calibrated label showing the last date of calibration and the date when the next calibration is due. Calibration is scheduled annually, unless you believe the unit to be defective, whereupon the unit will be calibrated after repair and receive a new label showing the date calibrated and the new calibration-due date. Check the calibrated label to ensure the Pressure Meter Calibrator has a valid calibration date before using the unit. **Calibration must be done by Scan-Sense AS or a certified supplier/service center.**

1.2 CERTIFICATION

Scan-Sense AS certifies that the PM305 and PC705 comply with its published list of specifications at the time it was manufactured. Scan-Sense AS also certifies that its calibration measurements are traceable to *Norwegian Accreditation* and to the calibration facilities of other *International Standards Organization* (ISO) members. Scan-Sense AS confirms that the PM305 and PC705 complies with the following standards:

EMC 89/336/EEC as amended by EC Directive 92/31/Eec and the European Low Voltage Directive 73/25/EEC, amended by 93/68/EEC. To ensure compliance, please use screened/shielded serial communication leads (RS232).

1.3 WARRANTY

This product is guaranteed free from defects in material and workmanship for one (1) year from the date of shipment. During this warranty period, Scan-Sense AS will, at its option, either repair or replace the PM305 and PC705 should it prove to be defective. The product must be returned to a service facility designated by Scan-Sense AS for warranty service or repair. The foregoing warranty will not apply to defects resulting from improper maintenance by the purchaser, purchaser-supplied software or interfacing, unauthorized modification or misuse, operation exceeding the environmental specifications for the PM305 and PC705, or improper site preparation. No other warranty is expressed or implied by Scan-Sense AS, and Scan-Sense AS shall not be liable for any direct, indirect, special, incidental or consequential damages, whether based on contract, tort, or any other legal theory.

1.4 CONVENTIONS USED IN THIS DOCUMENT

We have provided this section of the Handbook to help you identify noteworthy symbols, terms and conventions used in this handbook. Look for the following:

⚠	Symbol used to identify an action that can cause personal injury or damage to equipment.	**Terms and definitions**: We define **calibration** as being able to compare the ability of the equipment to perform to a known standard. Pressure calibration provides a means of quantifying uncertainties in pressure measurement in order to optimize sensor and/or system accuracy.
CE	Conformité Européenne	

1.5 SAFETY PRECAUTIONS

Following these safety precautions should ensure safe operation of the pressure meter and your personnel safety. Be careful when working in hazardous areas as **any** electrical spark could result in an atmospheric explosion/fire.

- Do not use the instrument at ambient temperatures above 50°C.
- Do not connect to RS232 port in hazardous area.
- Do not apply voltage to the CURRENT input terminal.
- Do not remove the rear panel.
- Connect only Scan-Sense manufactured sensors to the External Sensor connector.

1.6 BATTERY CHARGING INFORMATION

- Do not charge battery in hazardous areas.
- Use only the battery charger supplied by Scan-Sense AS

From a completely discharged condition, battery-charging time is about 14 hours, at a maximum charging current of 65mA.

When the battery is charged, it will provide power for about 35 hours of continuous operation if the display back-light is defined as OFF, (and with no RS232 connection).

In safe areas, the Pressure Meter Calibrator can be operated with all Inputs and Outputs, and with the battery charger connected. The Battery Charging time will increase depending on connections and display back-light settings.

1.7 PM305/PC705 NOT OPERATING/FAILED

Repairs must be done by manufacturer or supplier certified for service/repair of intrinsically safe equipment. Replacement batteries and fuses must be obtained from the manufacturer.

Manufacture address:

Scan-Sense AS	Phone: + 47 33 36 30 00
Bekkeveien 163	Fax: + 47 33 36 30 01
N-3173 Vear, Norway	Email: post@scansense.no

2 CONTROLS AND INDICATORS

2.1 DISPLAY, CONTROLS AND CONNECTIONS

ON/OFF button Power on or off control	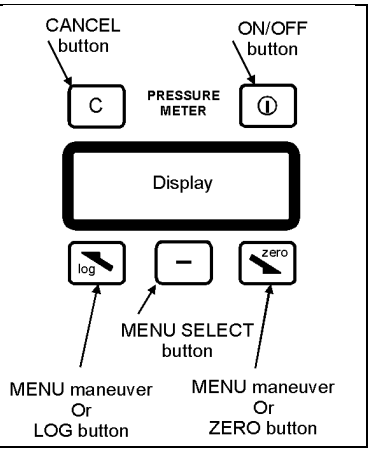
CANCEL Used to cancel an action and to move to the previous menu level.	
Display Shows the available menu selections or values.	
MENU SELECTION Allows selection of menu item to read, change or define information, or to select the next level of sub-menu. ▲ move UP the menu. ▼ move DOWN the menu.	

Input Terminals		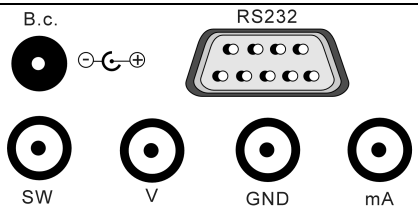			
SW	Switch test	V	Voltage	Gnd	Ground (common)
mA	Current	B.c.	Battery charger	RS232	serial communication
DO NOT charge battery or connect to RS232 in a hazardous area.					

2.2 BATTERY CHARGER

Connection for the Battery Charger provided by Scan-Sense AS. In safe areas, the Pressure Meter Calibrator can be operated with all Inputs and Outputs, and with the battery charger connected. The Battery-charging time will increase depending on connections and display back-light settings.

2.3 RS232 COMMUNICATION

Serial RS232 connection for interfacing the PM305 or PC705 to allow menu definition, logging, etc. via PC or other computer-based device with software from Scan-Sense AS.

2.4 SWITCH TEST

Input connection for indicating when the switch changes state (open-to-closed or closed-to-open).

2.5 VOLTAGE

Input connection for voltage measurement.

2.6 GROUND

Reference ground for the pressure meter. Use in conjunction with the SWITCH-TEST, VOLTAGE, and CURRENT input connectors.

2.7 CURRENT

Do not apply voltage to the current input terminal. Applied voltage can cause the internal fuse to blow. If the fuse blows, refer to Chapter 12 Replacing fuse in the PM305 and PC705.

Input connection for current measurement.

2.8 EXTERNAL SENSOR

Connect only reference sensors manufactured by Scan-Sense AS to the External Sensor connector.

Always replace the cap/cover when not in use and power OFF the unit before connecting the external reference sensor.

Contact Scan-Sense AS for available external reference sensors.

ONLY connect sensors provided by Scan-Sense AS

ENTERNAL SENSOR connector

3 OPERATION MENUS AND INPUT SETUP

The menus are organized in levels, with each level leading to lower-levels of information or available selections.

At power-up, the display will INITIALIZE and restore previously defined and saved values.

To VIEW the menus, press the MENU SELECTION button. The following headings in this chapter describe the menus and sub-menus.

Main menu	**Sub-menus**
Input setup	Measurement unit Sensor input Sensor range Filtering Number of digits Reference input
Settings	Main menu type Backlight brightness Backlight timeout LCD contrast
Information	Reference details Software information

3.1 OPERATION CONTROLS

Menu interaction controls

ON/OFF button Power on or off control	
CANCEL Used to cancel an action and to move to the previous menu level.	
Display Shows the available menu selections or values.	
MENU SELECTION Allows selection of menu item to read, change or define information, or to select the next level of sub-menu. ▲ move UP the menu. ▼ move DOWN the menu.	

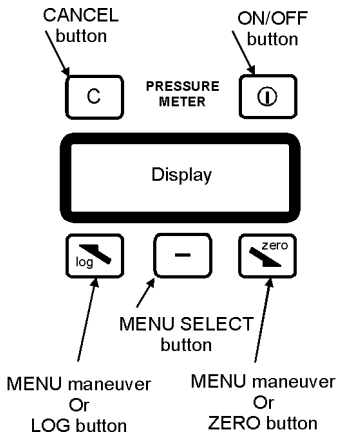

3.2 INPUT SETUP

This menu group allows you to configure, select and set up all reference and external reference sensor information.

3.2.1 Measurement unit

You can select the desired measurement unit in this sub-menu. When you enter this sub-menu, the active unit will be shown as selected. The selected new unit will be applied to both the internal and external reference. It is possible to change from bar to any other unit. The bar value is multiplied with the respective constant. Press the CANCEL button to return to the previous menu without changing the value:

- bar
- kPa (kN/m^2) 1E5/1E3
- MPa (MN/m^2) 1E5/1E6
- atm 1E5/1.01325E5
- psi (lbf/in^2) 1E5/6.89475729317E3
- at (kgf/cm^2) 1E5/9.80665E4
- torr (mmHg) at 0°C 1E5/1.33322368421E2
- mHg at 0°C 1E5/1.33322368421E5
- inHg at 32°F 1E5/3.38638815789E3
- cmH_2O at 4°C 1E5/9.80638E1
- mH_2O at 4°C 1E5/9.80638E3
- inH_2O at 39.2°F 1E5/2.4908891E2

3.2.2 Sensor input

You can select the desired external reference sensor input signal-type in this sub-menu. When you enter this sub-menu, the active unit will be shown as selected. Possible sensor inputs are:

- 0-15 V
- 0-100 mV
- 0-30 mA

3.2.3 Sensor range

You can use this sub-screen to set up how the external reference sensor input electrical signal should be converted to pressure. To do this, you set a low and high electrical value equal to a low and high-pressure value. It is possible to edit both electrical and pressure values.

3.2.4 Filtering

You can select delay between each time the sensor and reference is sampled and updated in this sub-menu. When you enter this sub-menu, the active unit will be shown as selected. (The respective constant is the number of samples needed to take an average)*:* Possible filter settings are:

- Fast 2
- Medium 5
- Accurate 10

3.2.5 Number of digits

In this sub-menu, you can select the numbers of the digits you want to view on the sensors and references. When you enter this sub-menu, the active unit will be shown as selected. Possible selections are:

- 3 numbers
- 4 numbers
- 5 numbers

3.2.6 Reference input

You can select the reference input in this sub-menu. When you enter this sub-menu, the active unit will be shown as selected. Possible selections are:

- **Automatic** (use the external reference if it is present during power-up, otherwise use the internal reference)
- **Internal** (use the internal reference)
- **External** (use the external reference)

3.3 SETTINGS

This menu group allows you to configure the PM305/PC705 device settings that do not affect the sensor or the reference.

3.3.1 Main view type

You can select how the Main Menu will look from this sub-menu. When you enter this sub-menu, the active unit will be shown as selected. The illustration below shows the LCD with explanations and possible selections:

Normal

Error in unit		Sensor value (in mA or Volts)	
Ref value (in unit)		Sensor value (in unit)	
Measurement unit	MENU	Sw:OFF	

battery

Min and max

Maximum in unit	Measurement unit	Maximum in unit	
Ref value (in unit)		Sensor value (in unit)	
Minimum in unit	MENU	Minimum in unit	

battery

Switch and leak

Reading per hour/minute/day		OFF:---	
Ref value (in unit)		Sensor value (in unit)	
Measurement unit	MENU	ON:---	

battery

3.3.2 Backlight brightness

You can adjust the brightness of the LCD back-light in this sub-menu. The hardware supports 8 different levels. High back-light brightness can severely reduce battery discharge time.

3.3.3 Backlight timeout

You can select back-light timeout in this sub-menu. When you enter this sub-menu, the active unit will be shown as selected. Possible selections are:

- Always off (no battery used for back-light)
- 2 seconds
- 5 seconds
- 10 seconds
- 20 seconds
- 1 minute
- Always on (battery used to provide back-light)

Selecting “Always on” as the backlight timeout will severely consume battery power.

3.3.4 LCD contrast

You can adjust the contrast of the LCD in this sub-menu. High LCD contrast will slightly consume battery power.

3.4 INFORMATION

You can view the PM305/PC705 information in this menu group.

3.4.1 Reference details

This tells you information about the reference you have selected (refer to "Input setup" and "reference input" chapters). The following information is shown:

- Serial number
- Sensor pressure range
- Calibration date

3.4.2 Software information

There are two software items with related information. The first one (to the left on each line) refers to the main micro-controller in the PM305/PC705, which controls the external RS-232 port, the LCD and user input. The second (to the right on each line) refers to the internal sensor reference ADC micro-controller. The following Information is shown:

- Baud rate (communication speed)
- Communication protocol addresses
- Software versions

3.5 HISTORY LOG

This menu group allows you to store, view and delete log information in the PM305/PC705. The stored log-information is sensor name, related input setup, switch-state and pressure values for reference and sensor. It is possible to store up to 30 groups of information ("connected" to a “sensor name”), and up to 10 pressure points (reference, sensor and switch-state).

3.5.1 Enter sensor name

You must enter a sensor name before you can log information. Both alphabetical and numeric characters are available, and up to 8 characters can be used in a sensor name. When you have configured

the input setup and entered the sensor name, pressing the Log Button when in Main view will store information to the history log. A specific input setup is connected to each sensor name, and if this input setup is modified after the information is logged, a new sensor name is required.

3.5.2 View stored sensors

Select this menu-item to view logged sensor names, connected input setup, switch-state and pressure values.

3.5.3 Delete one sensor

This menu item allows you to select one sensor name for removal from the history log. All information connected to this sensor-name will be removed.

3.5.4 Delete all

All history-log information will be removed if this menu item is selected. You will be prompted to ensure that this is not done accidentally.

4 GETTING STARTED

This section contains a description of the PM305/PC705 operator control and connection points to help you to get started quickly.

Operation controls and connections

Very little operator interaction is required to begin a calibration. The main operator interaction is via the unit's buttons and display, or via a (local) PC or other remote computer. Communication with the PC is via the unit's RS232 serial port connector. To begin a calibration, you must:

1. Connect the external reference sensor (if it is to be used)
2. Connect the meter or sensor to be tested. Refer to Chapters 6 through 10 for information about the type of pump being used.
3. Power the unit ON.
4. Configure the sensor to be tested.
5. Connect the sensor leads to the appropriate input connector. Refer to Chapters 6 through 10 for information.
6. Set the pressure using the pressure pump (HTP1, LPT1, etc.).
7. End of procedure.

5 SPECIFICATIONS OF PM305/PC705

Accuracy	±0.03% FS (10–40°C), temperature effects: 0.001% of reading/°C
mA input	0–30mA (± 0.03% FS.)**
V input	0–15VDC (± 0.05% FS.)**
** Ambient temperature 25°C, temperature effects: ± 0.008%/°C.	
History log	30 sensors, 10 points each
Operating temperature (ambient)	0 to +50°C
Process temperature	–20 to +80°C
Pressure overload	FS x 1.5
Wetted parts	Hastelloy C-22
Housing	Anodized aluminum
Operating time on batteries	Approximately 35 hours
Functions	Programmable: Input mA/mV/V/Switch Test, Range, Conversion, Engineering Units, Filter. Min/Max/Tare, History Log, Internal/External Sensor, Battery Indicator, Leak Test, Selectable Language (optional), Remote Operation (optional).
Engineering unit	Bar, kPa, Mpa, atm, psi (lb/in²), at (kgf/cm²), torr, mHg at 0°C, inHg at 32°F, cmH_2O at 4°C, inH_2O at 39.2°C
EEx / IS certification	Exe ia IIC T4 Ⓔx, NEMKO 02ATEX 1374X
ATEXproduction notification	NEMKO 02ATEX445Q ATEX according to directive 94/9/EC
PM305, PM310L, PM310H	
Pressure ranges	PM305: –0.8 to 1200 Bar PM310L: –0.8 to 60 Bar PM310H: 0 to 700 Bar
Pressure media	PM310L: All liquids/gas compatible with wetted parts alloy. PM310H: Oil or distillate water
Overall dimensions	92 x 105 x 33 mm (w-h-d)

Weight	PM305: 650 g PM310L: 1.4 kg PM310H: 3.6 kg

PC705	
Pressure range	0 to 700 Bar
Pressure media	Oil
Overall dimensions	345 x 160 x 180 mm (w-h-d)
Weight	8.1 kg

Maximum input rating

Input	Range	Absolute maximum	Unit
Pressure	0 - 20	30	Bar
Pressure	0 - 40	60	Bar
Pressure	0 - 80	120	Bar
Pressure	0 -150	225	Bar
Pressure	0 - 300	450	Bar
Pressure	0 - 600	900	Bar
Pressure	0 - 1200	1800	Bar
Voltage	0 - 15	19	VDC
Current *	0 - 30	40	mADC

* Input is protected by 50 mA fuse

Scan-Sense AS
Bekkeveien 163
N-3173 Vear
Norway
Web/internet
e-mail:

Phone: + 47 33 36 30 00
Fax: + 47 33 36 30 01
www.scansense.no
post@scansense.no

When returning a product, please provide the following information,

1. Product name
2. Serial number
3. Details of defect/work to be undertaken
4. Operating conditions
5. Tell us if the product has been in contact with anything hazardous or toxic and the relevant COSHH references and precautions to be taken when handling.

6 LTP1, LOW PRESSURE HAND PUMP

Provides low pressure of 1 to 3 bar.

> Always release the internal pressure at the connectors **before** disconnecting. Uncontrolled release of high pressure can result in personal injury and damage to equipment.
>
> **Do not connect LTP1 to external pressure source!**

6.1 LTP1 CONTROLS AND ORIENTATION

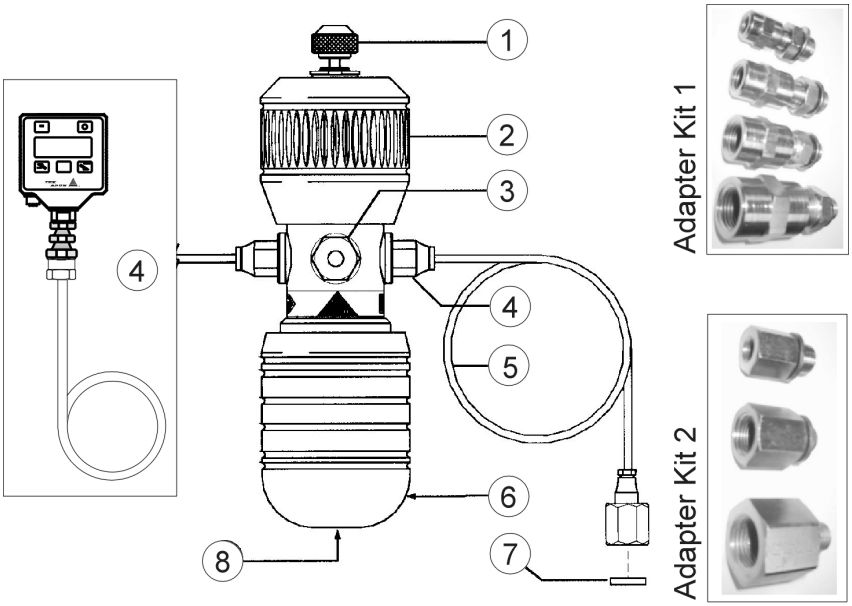

Drawing key:

① Pressure-release valve.

② Fine-adjustment control.

③ Pressure or Vacuum selector.

④ Two push-fit connectors to accept 4mm OD hoses to item under test and PM305 (master instrument).

⑤ Pressure port: ¼-inch BSP female connector to suit adapters/item under test.

⑥ Pump handle.

⑦ Nylon seals (see seal kit provided). DO NOT use PTFE tape for sealing with parallel threads.

⑧ Pressure-relief valve.

RELEASE VALVE ① Can be used to reduce or release pressure in the system. The rate of pressure reduction is dependent upon the degree of rotation when operating the valve. Minimal force is required to seal the system.

FINE-ADJUSTMENT CONTROL ② The generated pressure can be fine adjusted by turning the fine-adjustment valve either in or out to increase or decrease the pressure.

IMPORTANT

Do not wind the fine-adjustment valve ② any further when the top of the pump body is visible.

PRESSURE/VACUUM SELECTION ③ Press the selector ③ as indicated on the label to engage the desired mode. Ensure that the release valve ① is fully closed (clockwise motion) prior to pumping.

PRESSURE PORTS ④ The hoses ⑤ are fitted by pushing them into the connectors ④ until resistance is felt. To remove the hoses, press the collar "in" on the connector while pulling on the hose.

PRESSURE RELIEF VALVE ⑧

The maximum output pressure can be set using the pressure relief valve ⑧ located inside the main piston, and is accessed via the handle-retaining "Grub Screw".

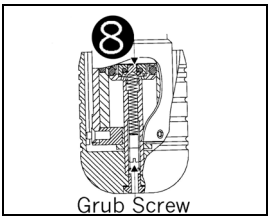

If the system has not been used for a period of time, it may be difficult to operate on the first stroke.

Seal replacement: Depending on the frequency of use, the main piston seal (and others) may need replacing. Replacement seals and instructions for fitting are contained in the seal kit (LTPK1).

6.2 OPERATION OF THE LTP1.

Refer to the orientation drawing to locate the controls.

1. Choose the correct adapters and seals and connect to the pressure port ④ at one end of the flexible hoses ⑤.
2. Choose the correct adapters and seals and connect the item under test to the pressure port at the end of the second flexible hose ⑤ Ensure seals are fitted and adapters tightened to a maximum torque of 15Nm.

3. Screw the fine-adjustment valve ② fully clockwise.
4. Screw the fine-adjustment valve ② counter-clockwise 4 to 6 full turns.
5. Screw the pressure-release valve ① fully clockwise, tightening to ensure a good seal.
6. Using a small screwdriver, adjust the pressure-relief valve ⑧ to set the desired maximum output pressure. Turn the “Grub Screw” located in the main piston clockwise to increase or counter-clockwise to decrease the pressure setting.
7. Operate the handle ⑥ until the pressure is close to that which is finally required.
8. Wind the fine-adjustment valve ② “in” to increase pressure or “out” to decrease pressure until the required pressure is reached. After increasing the pressure, it may take up to 30 seconds for the pressure to settle due to thermodynamic effects, setting of seals or expansion of the flexible hose.

STOP unscrewing the fine-adjustment valve ② when the top of the pump body becomes visible!

9. Reductions in pressure can also be achieved by careful use of the pressure-release valve ①.
10. Vacuum is achieved using the above procedure and having the changeover valve ③ pushed completely towards the vacuum position.
11. End of operation procedure.

6.3 LTP1 FAULT INVESTIGATION

In the event that the system appears to lose pressure, check the connections to ensure that they are tight and the seals are good. Replace poor seals and repeat the operation. When testing for leaks you may notice that air is drawn in or expelled from around the changeover valve ③, this is normal and should not be a cause for concern

Connection to the handheld test system is sealed with “o”-ring or bonded seals and should not leak. The pipe or body connection can be checked but should not be tightened more than 2 Nm.

DO NOT attempt to tighten the other fittings to the test system as this can cause damage to the sealed joints!

7 TP1, HAND HELD PRESSURE TEST SYSTEM

Provides pneumatic pressure of 1 to 40 bar.

> Always release internal pressure at connectors **before** disconnecting. Uncontrolled release of high pressure can result in personal injury and damage to equipment.
>
> **Do not connect TP1 to external pressure source!**

7.1 TP1 CONTROLS AND ORIENTATION

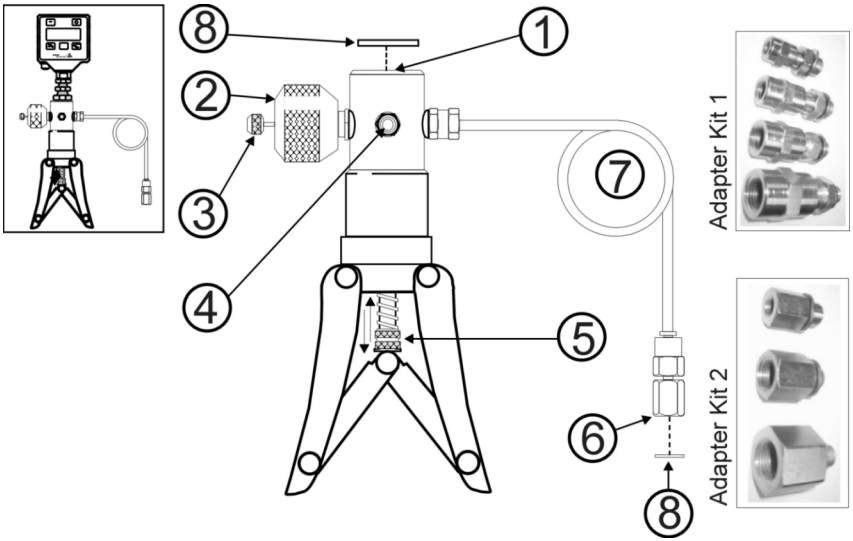

Drawing key:

① 3/8-inch to ¼-inch BSP swivel connector for PM305 (master instrument).

② Fine-adjustment valve (volume control).

③ Pressure-release valve

④ Pressure or Vacuum selector.

⑤ Adjustable stroke for varying maximum pressure output.

⑥ Pressure port: ¼-inch BSP female connector to suit adapters/item under test.

⑦ Flexible hose to item under test.

⑧ Nylon seals (see seal kit provided). DO NOT use PTFE tape for sealing with parallel threads.

RELEASE VALVE ③ Can be used to reduce or release pressure in the system. The rate of pressure reduction is dependent upon the degree of rotation when operating the valve. Minimal force is required to seal the system.

VOLUME CONTROL ② The generated pressure can be fine-adjusted by turning the fine-adjustment valve either clockwise or counter-clockwise to increase or decrease the pressure accordingly.

IMPORTANT

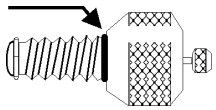

Under no circumstances should the fine-adjust valve ② be wound back beyond the read-line indicator on the body. Should this occur, then the pressure must be released from the system before attempting to re-engage the fine-adjustment valve.

OVER PRESSURE PROTECTION ⑤ To adjust the maximum output pressure of the system, turn the nuts to increase or decrease the stroke length.

PRESSURE/VACUUM SELECTION ④ Press the selector ④ as indicated on the label to engage the desired mode. Ensure that the release valve ③ is fully closed (use a clockwise motion) prior to pumping.

If the system has not been used for a period of time, it may be difficult to operate on the first stroke. The cylinder has been lightly greased at assembly, but if additional lubrication is ever required, apply a minimal amount to the inside of the cylinder. Access is via the three retaining screws located under the black collar.

Seal replacement: Depending on the frequency of use, the main piston seal (and others) may need replacing. Replacement seals and instructions for fitting are contained in the seal kit (TPK1).

7.2 OPERATION OF THE TP1

Refer to the orientation drawing to locate the controls.

1. Choose the correct adapters and seals and connect item under test to pressure port ⑥ at the end of the flexible hose ⑦. Ensure seals are fitted and adapters tightened to a maximum torque of 15Nm.
2. Screw the fine-adjustment valve ② fully clockwise.
3. Screw the fine-adjustment valve ② counter-clockwise 4 to 6 full turns.

4. Screw the pressure-release valve ③ fully clockwise, tightening to ensure a good seal.
5. Operate handles until the pressure is close to that which is finally required. Ensure handles are fully squeezed together on each stroke to achieve maximum pressure output.
6. Wind the fine-adjustment valve ② (clockwise to increase pressure or counter-clockwise to decrease pressure) until the required pressure is reached. After increasing the pressure, it may take up to 1 minute for the pressure to settle due to thermodynamic effects, setting of seals or expansion of the flexible hose.

NEVER screw the fine-adjustment valve ② beyond the red line indicator!

7. Reductions in pressure can also be achieved by careful use of the pressure release valve ③.
8. Vacuum is achieved using the above procedure and having the changeover valve ④ pushed completely towards the vacuum position.
9. End of operation procedure.

7.3 TP1 FAULT INVESTIGATION

In event that the system appears to lose pressure, check the connections to ensure they are tight and the seals are good. Replace poor seals and repeat the operation. When testing for leaks you may be notice that air is drawn in or expelled from around the changeover valve ④, this is normal and should not be a cause for concern

Connection to the handheld test system is sealed with “o”-ring or bonded seals and should not leak. The pipe or body connection can be checked but should not be tightened more than 2 Nm.

DO NOT attempt to tighten the other fittings to the test system as this can cause damage to the sealed joints!

8 HTP1, HYDRAULIC HAND HELD PRESSURE TEST SYSTEM

Provides hydraulic pressure of 0 to 700 bar

Always release the internal pressure at the connectors **before** disconnecting. Uncontrolled release of high pressure can result in personal injury and damage to equipment. **Excessive pressure can crack or break the fluid reservoir case!**

Reservoir fluid level: If the fluid level in the reservoir falls considerably during use, a partial vacuum may be created in the reservoir that can affect the performance of the pump. To avoid this, simply allow air to enter the reservoir by partly unscrewing the filling plug.

Seal replacement: Depending on the frequency of use, the main piston seal (and others) may need replacing. Replacement seals and instructions for fitting are contained in the seal kit (HTPK1).

8.1 HPT1 CONTROLS AND ORIENTATION

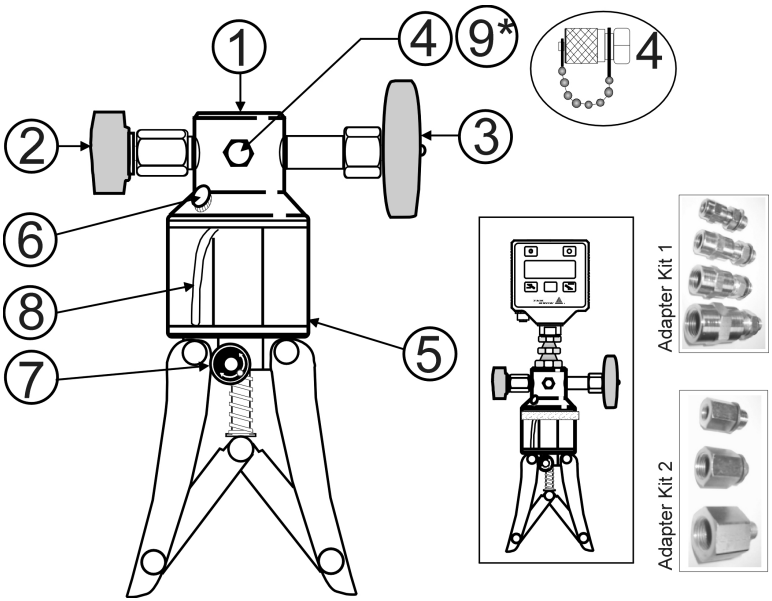

Drawing key:

① 3/8-inch to ¼-inch BSP swivel connector for PM305 (master instrument).

② Pressure-release valve.

③ Fine control

④ Pressure port: M16 x 1.5 mm quick connector for flexible hose to switch adapters or item under test.

⑤ 100cc reservoir. Fluid level to maximum fill marker.

⑥ Reserve-filling plug.

⑦ Prime/High pressure selector.

⑧ Fluid-inlet tube.

⑨ Rear port: for Pressure Relief Valve ONLY. **DO NOT use for any other purpose.**

8.2 OPERATION OF THE HTP1

Refer to the orientation drawing to locate the controls.

1. Remove the filling plug ⑥ and fill the reservoir ⑤ to 6mm level with the recommended fluid and replace the filling plug.
2. Connect the instrument under test to the flexible hose/gauge adapter and attach to the pump via the quick-fit connection ④.
3. Adjust the fine control ③ to mid-travel.
4. Ensure that the pressure-release valve ② is open (turn fully clockwise, then one turn counter-clockwise). Fully squeeze the handles “in” and turn the selector ⑦ to the “prime” position.
5. Operate the handles several times to expel air from the pump (ensure that the fluid-inlet tube ⑧ remains immersed in fluid at all times).
6. Close the release valve ② fully clockwise.
7. Prime the system by squeezing the handles together and then releasing them, to allow the oil to enter the pump cylinder. Repeat as necessary until the system is fully primed and low pressure is indicated on either the master or test instrument.
8. With the handles fully squeezed “in” select the “high” pressure position on the selector ⑦ and operate the handles to generate approximate pressure. **Note:** Smaller handle strokes enable easier pressure generation at high pressures.
9. Adjust pressure to the required value using the fine control ③. Note that the pressure will fall slightly, immediately after pressure generation due to the thermodynamic effect but will stabilize after a short time.

> DO NOT EXCEED the maximum operating pressure indicated on the pump label! Fluid reservoir can crack or break if excess pressure applied.

10. To totally release pressure from the system, turn the release valve ② one turn counterclockwise and select the “prime” position on the selector ⑦ after first squeezing the handles fully “in”. **Note:** Careful use of the release valve ② and fine control ③ enables a controlled release of pressure, essential for calibration purposes.
11. End of operation procedure.

9 PV411 PNEUMATIC/HYDRAULIC HAND-PUMP SYSTEM

Pressure ranges (maximum safe working pressure is 700 bar):

- Provides pneumatic pressure of 0 to 60 bar
- 0 to –0.95 bar (near vacuum)
- Provides hydraulic pressure of 0 to 700 bar

Always release the internal pressure at the connectors **before** disconnecting. Uncontrolled release of high pressure can result in personal injury and damage to the equipment.

Reservoir-fluid level: If the fluid level in the reservoir falls considerably during use, a partial vacuum may be created in the reservoir that can affect the performance of the pump. To avoid this, simply allow air to enter the reservoir by partly unscrewing the filling plug. Hydraulic fluids must be compatible with stainless steel, anodized aluminum, nitrile rubber, PTFE, polypropylene, delrin, acrylic and nylon. Hydraulic fluid must have a maximum viscosity of 150 cSt at 40°C. Other fluids that can be used are de-mineralized water or mineral-based oils (SAE 40W, ISO viscosity grade 150).

Seal replacement: Depending on frequency of use, the main piston seal (and others) may need replacing. Replacement seals and instructions for fitting are contained in the seal kit (PV411K1).

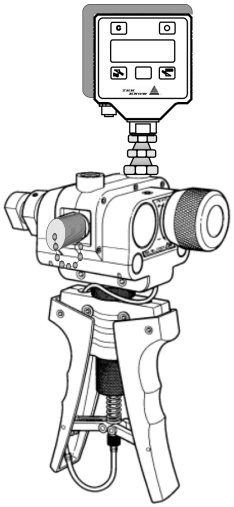

9.1 PV411 CONTROLS AND ORIENTATION

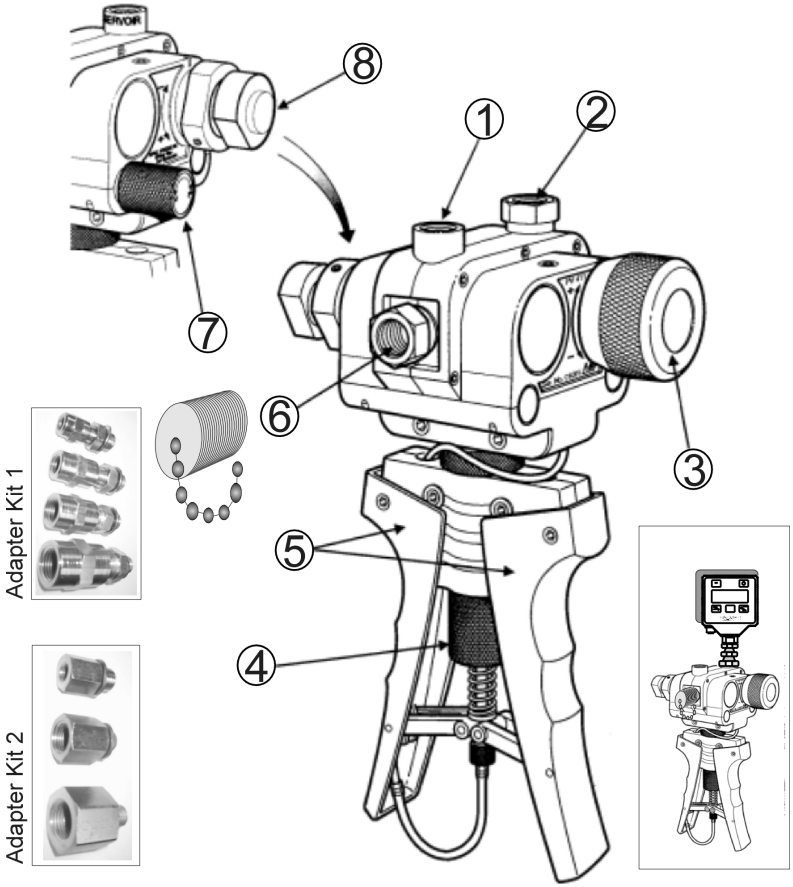

PV411, drawing key 1

Drawing key 1:

① Inlet (reservoir) port

② ¼-inch to ¼-inch BSP connector for PM305 (master instrument)

③ Volume adjuster

④ Limit adjuster

⑤ Scissor-action handles

⑥ Pressure port: M16 x 1.5 mm quick connector for flexible hose to suit adapters and item under test.

⑦ Selector valve

⑧ Pressure-relief valve

9.2 PV411 PNEUMATIC OPERATION

9.2.1 Pneumatic-selector valve and scissor-action handles limit-adjuster of the PV411

Selector valve ⑦

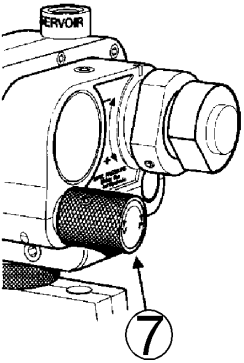

Pressure
Turn the selector valve fully clockwise (“in”) position.

Vacuum
Turn the selector valve fully counter-clockwise (“out”) position.

Vent
Slowly turn the selector valve to the center position.

Scissor-action handles limit-adjuster

Turning the limit adjuster ④ clockwise reduces the stroke of the scissor-action handles ⑤. Turning the limit adjuster ④ counter-clockwise increases the stroke.

For maximum pneumatic pressure generation, turn the limit adjuster fully counter-clockwise.

9.2.2 Pneumatic Operation of the PV411

As a pneumatic pump, selector valve ⑦ vents the system to atmosphere, between selection of pressure and vacuum. Operating the scissor-action handles ⑤ provides the pumping stroke for generating pressure. A volume adjuster ③ allows small adjustments of the system pressure.

In pressure mode, air/fluid is drawn through the inlet port ① on top of the pump and forced out through the two outlet ports (② and ⑥). **In vacuum mode**, the air/fluid flow is reversed as air/fluid is drawn in through the top and rear outlet ports (② and ⑥) and expelled through the inlet port ①.

Volume adjuster

Low pressure _ With the selector valve ⑦ set to vent (“open”), turn the volume adjuster fully counter-clockwise to the “out”

position. Turn the selector valve fully clockwise to the "in" position to select pressure. Turn the volume adjuster ③ clockwise to generate pressure.

High pressure _ Turn the volume adjuster ③ to the mid-position. In this position, fine adjustments of the generated pressure can be made. Using the scissor-action handles ⑤, generate the approximate pressure; then turn the volume adjuster ③ clockwise to the "in" position to increase the pressure or turn the volume adjuster ③ counter-clockwise to the "out" position to decrease the pressure.

Vacuum _____ Turn the selector valve ⑦ fully counter-clockwise to the "out" position. Turn the volume adjuster to the mid-position. In this position, fine adjustments of the generated vacuum can be made. Using the scissor-action handles ⑤, generate the approximate pressure; then turn the volume adjuster ③ clockwise to the "in" position to increase the pressure or turn the volume adjuster ③ counter-clockwise to the "out" position to decrease the pressure.

Refer to the orientation drawing to locate the controls.

Pressure

1. Connect the PV411 to the item under test using the hoses, pipes and adapters.
2. Turn the selector valve ⑦ fully clockwise to the "in" position.
3. Operate the scissor-action handles ⑤ to generate the approximate pressure, allowing time for thermal stabilization.
4. If necessary, use the volume adjuster ③ to adjust to the required pressure.
5. After attaining the required pressure, operate the scissor-action handles ⑤ to generate a higher pressure. Alternatively, vent pressure to atmosphere by slowly turning the selector valve ⑦ counter-clockwise to the center position.
6. End of procedure. Depressurize the pump and disconnect from the pipes and equipment.

Vacuum

1. Connect the PV411 to the item under test using the hoses, pipes and adapters.
2. Turn the selector valve ⑦ fully counter-clockwise to the "out" position.

3. Operate the scissor-action handles ⑤ to generate the approximate vacuum, allowing time for thermal stabilization.
4. If necessary, use the volume adjuster ③ to adjust to the required vacuum.
5. After attaining the required vacuum, operate the scissor-action handles ⑤ to generate more vacuum. Alternatively, vent vacuum to atmosphere by slowly turning the selector valve ⑦ counter-clockwise to the center position.
6. End of procedure. Depressurize the pump and disconnect from the pipes and equipment.

9.3 PV411 HYDRAULIC OPERATION

9.3.1 Setting pressure relief valve of the PV411

The pressure relief valve (PRV) can be set at pressures from 30 to 700 bar.

Do not exceed 700 bar as this can .damage the internal seals of the PRV and the PV411

If the system pressure exceeds the set pressure, the PRV opens and vents fluid through the inlet port to the reservoir. When system pressure decreases below the set pressure, the PRV closes.

Drawing key 3:

① PRV locking screw (quantity 2).

② PRV locknut (with left-hand thread).

③ PRV adjusting nut (with left-hand thread)

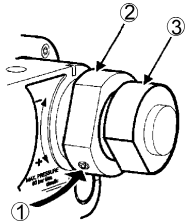

PRV, drawing key 3

Refer to the orientation drawing PRV411 drawing key 1 and PRV drawing key 3 to locate the controls.

1. Connect a suitable pressure indicator to either outlet port ② or ⑥ (see PRV411, drawing key 1). Fit a blank to the unused port.
2. Squeeze the scissor-handles ⑤ together to increase pressure until the relief valve operates.
3. Loosen the two PRV locking screws ①.
4. Loosen the locking nut ② by turning it clockwise.
5. Set the relief pressure by turning the PRV adjusting nut ③.
   *Turn **counter-clockwise to increase** pressure.*
   *Turn **clockwise to decrease** pressure.*

6. After setting the PRV, hold the adjusting nut ③ in position and tighten the locking nut ②. *Remember that the locking nut has a **left-hand** thread*.
7. Check operation of the PRV. If necessary, reset the PRV.
8. Secure the locking nut ② by tightening the two locking screws ①.
9. End of procedure.

9.3.2 Hydraulic Operation of the PV411

As a hydraulic pump, selector valve ⑦ vents the system to the reservoir, between selections of pressure and vacuum (using a priming process). The volume adjuster ③generates the required system pressure. To complete the hydraulic circuit, the fluid reservoir (see drawing key 2) is screwed into the inlet port ① (marked RESERVOIR) on top of the hand-pump. A pressure relief valve ⑧ can be adjusted to set the pressure between 30 and 70 bar. Operating the scissor-action handles ⑤ provides the pumping stroke for generating pressure. A volume adjuster ③ allows small adjustments of the system pressure.

The fluid-reservoir body (see drawing key 2) is transparent acrylic to provide a clear view of the contents. The reservoir can be removed from the pump without the need to empty the fluid (a self-sealing connection prevents leakage). The spring-loaded reservoir cover ② seals under atmospheric pressure conditions but, in the event of inadvertent pressurization, it will vent excess internal pressure harmlessly. Ensure that the O-ring ③ is fitted to the inlet pot to prevent leakage. Screw the reservoir clockwise into the inlet port marked RESERVOIR.

Drawing key 2:

① Reservoir-cover locknut.

② Reservoir-cover.

③ O-ring.

④ Bleed hole.

- Do not mix hydraulic fluids.
- Use only compatible fluids.
- Fit only appropriate seals.
- Damage can be caused if equipment connected to this pump is contaminated. Avoid particulate contamination.
- After use, the pump should be considered contaminated with hydraulic fluid.

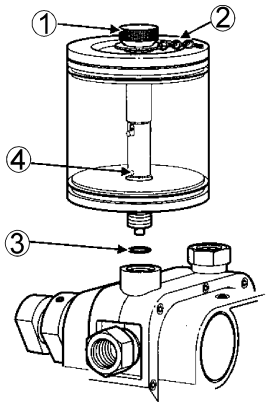

Reservoir, drawing key 2

Filling the reservoir

Unscrew the reservoir cover lock ① and remove the reservoir cover ②. Using clean recommended fluid, fill the reservoir to approximately 2/3 full. Refit the reservoir cover ② and re-tighten the reservoir locknut ①. Connect the required pipes and equipment to the outlet ports.

Priming the system

There are two methods for priming the system:

- Vacuum priming to extract the air or
- Pre-filing the system.

1. *If air remains in the system, full pressure cannot be achieved because the air in the fluid will compress. Air must be removed from the system fluid.*

2. *Both priming methods require the pump to be held in the vertical position to keep the reservoir bleed hole ④ submerged in the fluid. Do not allow air to enter the system through the bleed hole ④.*

Vacuum priming

This method should not be used with vacuum-sensitive equipment.

1. Connect the PV411 to the item under test using the hoses, pipes and adaptors.
2. Turn the selector valve ⑦ fully counter-clockwise to the “out” position.
3. Operate the scissor-action handles ⑤ until bubbles stop appearing in the reservoir (this generates the vacuum in the system).
4. Turn the selector valve ⑦ fully clockwise to the “in” position (this action releases the vacuum and rapidly fills the system with fluid from the reservoir).
5. End of procedure. The pump and connected system are ready for use.

Pre-filling the system

1. Connect the PV411 to the item under test using the hoses, pipes and adaptors.
2. Turn the selector valve ⑦ fully clockwise to the “in” position.
3. Loosen the reservoir-cover lock ① to open the reservoir cover ② and allow atmospheric pressure into the top of the reservoir.
4. Open the bleed valve on the unit under test.
5. Carefully operate the scissor-action handles ⑤ to fill the system. Stop pumping when fluid comes out of the bleed valve.
6. Close the bleed valve on the unit under test.
7. If necessary, top-up the reservoir to the 2/3 full level.
8. Refit and secure (tighten) the reservoir cover ② and re-tighten the reservoir locknut ①.
9. End of procedure. The pump and connected system are ready for use.

Hydraulic Operation of the PV411

Refer to the orientation drawing to locate the controls.

1. Connect the PV411 to the item under test using the hoses, pipes and adaptors.
2. Open the selector valve ⑦ by 1 turn counter-clockwise to the “in” position.
3. Screw the volume adjuster ③ fully counter-clockwise to the “out” position.
4. Close the selector valve ⑦.
5. Operate the scissors-action handles ⑤ to generate the initial pressure.
6. Turn the volume adjuster ③ clockwise to generate the required pressure. Allow time for thermal stabilization.
7. To reduce pressure, turn the volume adjuster ③ counter-clockwise (the “out” position) to the required pressure.
8. After completion, turn the volume adjuster ③ counter-clockwise (the “out” position) and the selector valve ⑦ to the center position to depressurize the pump.
9. End of procedure. Depressurize the pump and disconnect from the pipes and equipment.

9.4 PV411 FAULT INVESTIGATION

If the system pressure reduces, check the following:

Refer to the orientation drawing PV411 drawing key 1 to locate the controls.

1. Check that the selector valve ⑦ is in the correct position and properly tightened.
2. Allow sufficient time after generating pressure for the temperature to stabilize. The larger the system volume, the longer the time for thermal stability.
3. Check for leaks between the pump and the equipment under test and the adaptors, flexible pipe and connections. Tighten any loose joints and replace any seals that are worn or damaged.
4. In hydraulic mode, if the volume adjuster can be wound fully in, but maximum pressure cannot be achieved, there is probably air trapped in the system. Re-prime and repeat.
5. Check the Pressure-Relief Valve ⑧ pressure setting.

If, for any reason, a fault occurs within the pump, it is recommended that the equipment be returned to Scan-Sense AS.

10 PC705, HYDRAULIC HAND-HELD PRESSURE TEST SYSTEM

Provides hydraulic pressure of 0 to 700 bar

Always release the internal pressure at connectors <u>before</u> disconnecting. Uncontrolled release of high pressure can result in personal injury and damage to the equipment.

Reservoir-fluid level: If the fluid level in the reservoir falls considerably during use, a partial vacuum may be created in the reservoir that can affect the pump performance. To avoid this, simply allow air to enter the reservoir by partly unscrewing the filling plug.

Seal replacement: Depending on frequency of use, the main piston seal (and others) may need replacing. Replacement seals and instructions for fitting are contained in the seal kit (PC705K1).

10.1 PC705 CONTROLS AND ORIENTATION

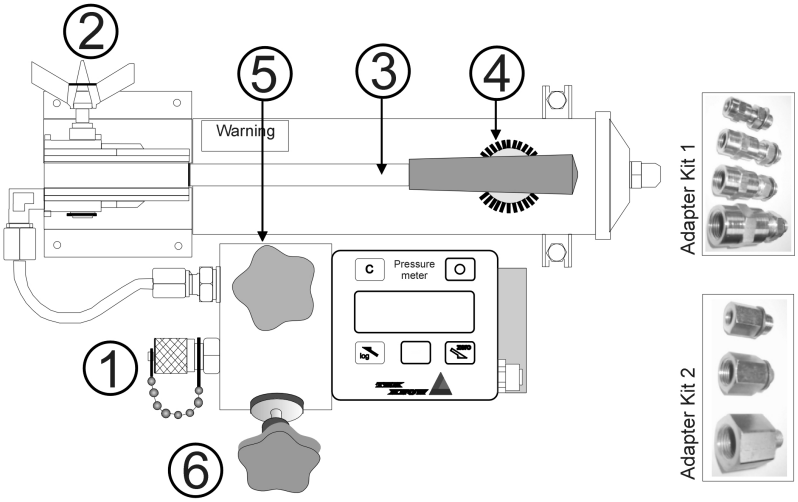

Drawing key:

① Pressure port: M16 x 1.5 mm quick connector for flexible hose to adapters and item under test.

② Pressure release valve

③ Pump handle.

④ Filling cap

⑤ Main pressure valve

⑥ Fine-adjustment valve (volume control).

10.2 OPERATION OF THE PC705

Refer to the orientation drawing to locate the controls.

1. Lift the pump handle ③. Remove the filling plug ④ and fill the reservoir to 6mm level with the recommended fluid. Replace the filling plug.
2. Connect the instrument under test to the flexible hose/gauge adapter and attach it to the pump via the quick-fit connection ①.
3. Adjust the main-pressure valve ⑤ and fine-adjustment valve ⑥ to mid-travel.
4. Ensure that the pressure-release valve ② is open (turn fully clockwise, then one turn counter-clockwise).
5. Operate the pump handle ③ several times to expel air from the pump.
6. Close the pressure-release valve ② fully clockwise.
7. Prime the system by pumping the handle to allow the oil to enter the pump cylinder. Repeat as necessary until the system is fully primed and low pressure is indicated on either the master or the test instrument.
8. Close the main-pressure valve ⑤.
9. Adjust the pressure to the required value using the fine-adjustment valve ⑥. **Note:** The pressure will fall slightly, immediately after pressure generation due to the thermodynamic effect but will stabilize after a short time.

DO NOT EXCEED the maximum operating pressure indicated on the pump label!

10. To totally release pressure from the system, turn the pressure-release valve ② and the main-pressure valve ⑤ one turn counterclockwise (the pump handle ③ can be operated without pressure resistance). **Note:** Careful use of the release valve ②, main-pressure valve ⑤ and fine-adjustment valve ⑥ enables a controlled release of pressure, essential for calibration purposes.
11. End of operation procedure.

11 PM310L/301H AND PC705 ACCESSORIES

11.1 ADAPTERS FOR THE ITEM UNDER TEST

Adapter kit 1, ¼-inch BSP to NPT Female, Carbon Steel	
Description	drawing
1/4" BSP male – 1/8" NPT female 1/4" BSP male – 1/4" NPT female 1/4" BSP male – 3/8" NPT female 1/4" BSP male – 1/2" NPT female	

Adapter kit 2, ¼-inch BSP to BSP Female, Carbon Steel	
Description	drawing
1/4" BSP male –- 1/8" BSP female 1/4" BSP male – 3/8" BSP female 1/4" BSP male – 1/2" BSP female	

Adapter kit 4 BSP-BSP Swivel, Carbon Steel
1/4" BSP male – 3/8" BSP male for 3PPM40050 and 3PPM70150 for LPT1 and TP1.

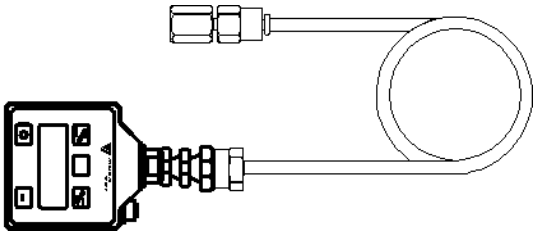

Adapter kit 4C BSP-BSP Swivel, Carbon Steel
1/4" BSP male – 1/4" BSP male for 5PV-411
For HTP1, PV411 and PC705; connects to M16 x1.5mm quick connect at pump and to item with M16 x 1.5mm with ¼" BSP.

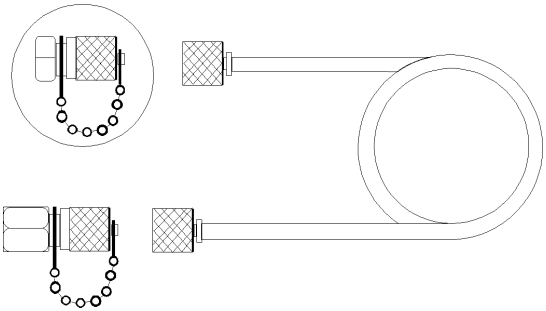

12 REPLACING FUSE IN THE PM305 AND PC705

12.1 FAULT FINDING TO DETERMINE IF THE FUSE HAS BLOWN

To determine if the fuse has blown, use a multimeter and measure the resistance between GND and A input. The resistance must be less than (≥) 25 Ohms. Use a multimeter with a test voltage less than 2.5VDC (otherwise, the internal 2.7V protecting diodes may cause a faulty Ohm/resistance measurement).

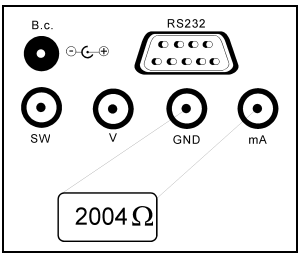

When ordering spare parts, always include the serial number of the faulty instrument. Battery and fuses must be obtained from Scan-Sense AS or a certified supplier/service center.

12.2 PM305, INSTRUCTIONS FOR REPLACING THE FUSE OR BATTERY

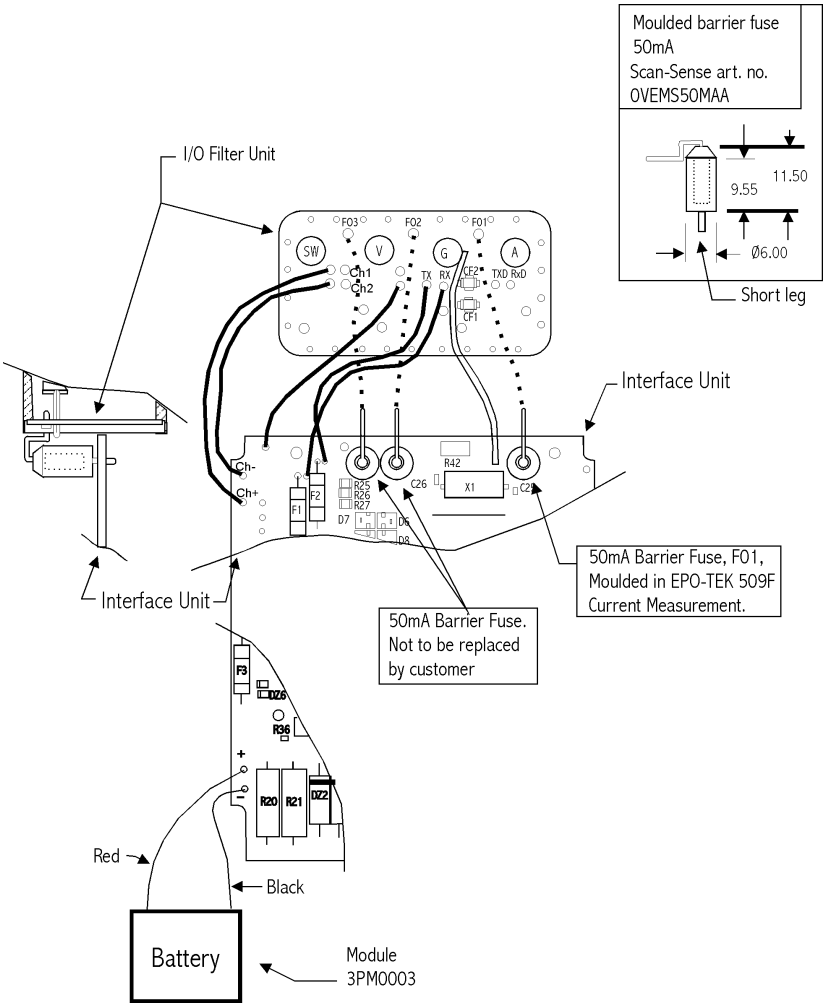

If needed, request original drawing no. SA00320; Title Assembly drawing, Fuse and Battery replacement.

<u>Replacing Fuse F01.</u>

<u>Remove Fuse,</u>

1. Unscrew 4 screws in the back-panel and remove panel carefully. 2 wires from battery are connected.

2. The fuse is now accessible. The fuse is mounted between I/O Filter Unit and Interface Unit.
3. Locate the fuse, then pull out the fuse-leg from the I/O Filter Unit first, and from the Interface Unit second.

New Fuse

4. First, push the short end of the fuse down into the socket on the Interface Unit. Then, with the help of a plier, insert the other end into the socket on the I/O Filter Unit. Now check that fuse's leg is not too close to the back-panel. The distance must be at least 2.5mm,. If this is OK, the back-panel can be remounted and secured with the 4 screws.

Replacing the Battery

1. Unscrew 4 screws in the back-panel and remove panel carefully. 2 wires, red and black, from battery are connected.
2. Disconnect wires. A soldering iron is needed.
3. Remove the 4 screws holding the battery pack to the back panel. Lift off the old battery and replace it with a new one. Secure the new battery with the 4 screws.
4. With help of the soldering iron, solder the black wire in its right place, i.e. "–", on the PC Board. Do the same with the red wire, "+".
5. Remount the back panel and secure with 4 screws.

If needed, follow instructions for charging.

12.3 PC705, INSTRUCTIONS FOR REPLACING THE FUSE OR BATTERY

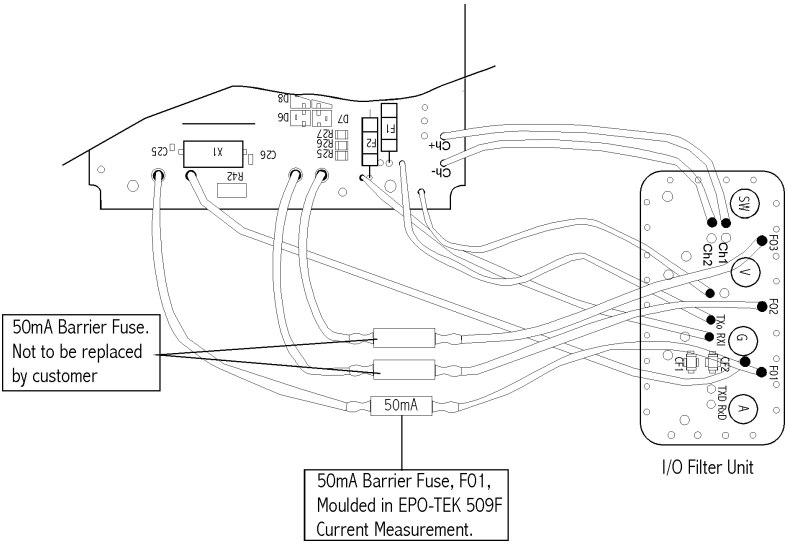

If needed, request original drawing no. SA00325; Title Assembly drawing, Fuse and Battery replacement.

Replacing Fuse F01.

Remove Fuse,

1. Unscrew 4 screws in the side-panel and remove panel carefully. 2 wires from battery are connected.
2. The fuse is now accessible. The fuse is marked with 50mA and plugged between 2 black wires.
3. Locate the fuse. Then, pull out the fuse-legs from the wires (the 2 wires are supplied with a small connector).

New Fuse

4. Connect the new fuse to the 2 wires and put the wires back into the housing. When everything is OK, the side-panel can be remounted and secured with the 4 screws.

Replacing the Battery

1. Unscrew 4 screws in the side-panel and remove panel carefully. 2 wires, red and black, from battery are connected.
2. Disconnect wires. Mini connector.
3. Remove the 4 screws holding the battery pack to the side-panel. Lift off the old battery and replace it with a new. Secure the new battery with the 4 screws.
4. Connect the battery.
5. Remount the back panel and secure with 4 screws.

If needed, follow instructions for charging.

13 CERTIFICATES

Nemko

NORWEGIAN ACCREDITATION S016

[1] EC-TYPE EXAMINATION CERTIFICATE

[2] Equipment or Protected System Intended for use in Potentially explosive atmospheres Directive 94/9/EC

[3]	EC-Type Examination Certificate Number:	Nemko 03ATEX1374X
[4]	Equipment or Protective System:	Pressure Meter/Calibrator
[5]	Applicant and Manufacturer:	Scan-Sense AS
[6]	Address:	Bekkeveien 163 NO-3173 Vear Norway

[7] This equipment or protective system and any acceptable variation thereto is specified in the schedule to this certificate and the documents therein referred to.

[8] Nemko AS, notified body number 0470 in accordance with Article 9 of Council Directive 94/9/EC of 23 March 1994, certifies that this equipment or protective system has been found to comply with the Essential Health and Safety requirements relating to the design and construction of equipment and protective systems intended for use in potentially explosive atmospheres given in Annex II to the Directive.

The examination and test results are recorded in confidential report no. 200251228

[9] Compliance with the Essential Health and Safety Requirements has been assured by compliance with:

CENELEC EN 50014: 1997 + A1: 1999 + A2: 1999
CENELEC EN 50020: 2002

[10] If the sign "X" is placed after the certificate number, it indicates that the equipment or protective system is subject to special conditions for safe use specified in the schedule to this certificate.

[11] This EC-TYPE EXAMINATION CERTIFICATE relates only to the design, examination and tests of the specified equipment or protective system in accordance to the directive 94/9/EC.
Further requirements of the Directive apply to the manufacturing process and supply of this equipment or protective system. These are not covered by this certificate.

[12] The marking of the equipment or protective system shall include the following :

Ex II 2 G EEx ia IIC T4 Ta: 50°C

Oslo, 2003-07-14

for Rolf Hoel
Certification Department

This certificate may only be reproduced in its entirety and without any change, schedule included.

Postal address: P.O.Box 73 Blindern N-0314 OSLO, NORWAY
Office address: Gaustadalléen 30 0373 OSLO
Telephone: +47 22 96 03 30
Fax: +47 22 96 05 50
Enterprise number: NO 974404532

[13] Schedule

[14] EC-TYPE EXAMINATION CERTIFICATE No Nemko 03ATEX1374X

[15] Description of Equipment or Protective System

PM305 and PC705 battery powered portable pressure meter/calibrator with internal or external pressure sensor.
External connections of intrinsically safe signals for switch test, voltage (0-15V) and current measurements (0-30mA).
Battery charging only with originally supplied charger in non-classified location.
RS 232 communication socket for connection to unspecified apparatus when used in non-classified location.

Type Designation

PM305 Pressure Meter
PC705 Pressure Calibrator

Safety Data

RS 232: Um 250V
Battery Charge: Max 65mA for 14 hours from empty state.

External connections Switch Test(SW), Voltage(max 15V) and Current (mA)

Maximum input voltage.	U_i: 30V
Maximum internal capacitance.	C_i: 10nF
Maximum internal inductance.	L_i: 3µH

The safety output data for the connections SW, V and mA are specified as follows:

SW:	U_o: 5,5V	I_o: 1,4mA
V:	U_o: 6,6V	I_o: 1µA
mA:	U_o: 3V	I_o: 0.3mA

Connector for External Pressure Sensor type 0KMP02510

Maximum output voltage.	U_o: 6,6V
Maximum output current.	I_o: 598mA
Maximum output power.	P_o: 0,72W
Maximum external capacitance.	C_o: 15 µF
Maximum external inductance.	L_o: 76 µH

Other types of external sensors may be connected so far as they comply with the safety parameters of the output circuit.

[16] Report No. 200251228 and the listed Descriptive Documents

This certificate may only be reproduced in its entirety and without any change, schedule included.

Postal address: P.O.Box 73 Blindern N-0314 OSLO, NORWAY
Office address: Gaustadalléen 30 0373 OSLO
Telephone: +47 22 96 03 30 *Fax:* +47 22 96 05 50
Enterprise number: NO 974404532

Descriptive Documents

Number	Rev.	Date	Sheets	Title/Description
3974169	-	02-05-13	1	Kontroll av bryter
E00059	A	03-07-08	2	Wiring Drawing Elektrisk kobling
E00060	A	03-07-10	1	System Safety Data PM 305 og PC 705
L01145	B	03-05-30	1	Layout Kalibrator Signal interface
L01147	A	03-05-19	1	Layout Calibrator I/O Filter
ME01203	A	03-07-14	2(2)	Mekanisk Tegning Bakfolie PM305
ME01203-1	A	02-11-22	1(2)	Mekanisk Tegning Frontfolie PM305/PC705
ME01344	A	03-06-03	1	Overall dim. drawing PM305
PCB01145	C	03-07-04	1	Printed Circuit Diagram Kalibrator Serial Interface
PCB01145	C	03-07-04	1	Drill drawing Serial Converter
PCB01147	A	03-05-19	1	Printed Circuit Board I/O Filter
PCB01147	A	02-04-19	1	Drill Drawing I/O Filter
PL01145C	-	03-07-07	6	Parts List Signal Interface
PL01147A	-	03-05-30	1	Parts List I/O Filter
PM305_A	A	03-01-10	17	PM305 Produksjonsunderlag
PP00141	A	03-06-26	10	Prosedyre for sammenstilling av PM305
PP00142	A	03-06-26	1	Prosedyre for dypplakking av kretskort 1145B
SA00312	A	03-05-22	3	Sammenstilling
SA00320	A	03-06-26	2	Assembly drawing Fuse and Battery replacement
SI00D10	A	03-05-16	1	Skjema Display, PM305 og PM 307
SI01145 1	B	03-05-05	2	Circuit Diagram Sensor Interface Kalibrator
SI01147	A	03-05-05	1	Circuit Diagram Calibrator I/O Filter
PC 705				
BL00002	B	03-06-27	1	Block Diagram PC705
ME 01353	A	03-02-07	1	Overall Dim. Drawing PC705 Pressure Calibrator
ME01241	A	03-01-08	1	Batteriboksdeksel PC705
ME01242	A	03-01-08	1	Mekanisk Tegning Bakplate
ME01243	A	03-06-17	1	Mekanisk Tegning Hus elektronikk PC705
ME01348	A	03-06-17	1	Mekanisk Tegning Batteriboks PC705
ME01352	A	03-07-14	1	Mekanisk tegning Sidefolie PC705
ME01356	A	03-07-11	1	Mekanisk Tegning
PC705_A	A	03-06-26	10	PC705 Produksjonsunderlag
PP00143	A	03-07-04	12	Prosedyre for sammenstilling av PC 705
SA 00322	A	03-07-03	1	Sammenstilling PC705 Elektronokk montert i Hus
SA00317	A	03-07-03	1	Sammenstilling Batteriboksdeksel med batteripakke
SA00318	A	03-06-26	1(2)	Sammenstilling Trykkblokk
SA00318	A	03-06-27	2(2)	Sammenstilling Monteringsplate
SA00321	A	03-07-03	1	Sammenstilling Monteringsplate og Trykkblokk
SA00323	A	03-07-03	1	Sammenstilling PC705
SA00324	A	03-07-03	1	Sammenstilling Frontpanel med Display og Interface
SI100D10	A	03-05-16	1	Skjema Display PM 305 og PC705

[17] **Special Conditions for Safe Use**

The intrinsically safe electrical circuits in the instruments is connected to the metal enclosure and it does not withstand the 500V AC test as specified in EN 50020 clause 6.4.12 and appropriate measures need to be considered when connecting the measuring terminals(SW, A, V) to external ground connected circuits.

[18] **Essential Health and Safety Requirements**
Covered by item 9

Postal address:
P.O.Box 73 Blindern
N-0314 OSLO, NORWAY

Office address:
Gaustadalléen 30
0373 OSLO

Telephone:
+47 22 96 03 30
Fax:
+47 22 96 05 50

Enterprise number:
NO 974404532

The end.